CITY OF NEWTON

PURCHASING DEPARTMENT

CONTRACT FOR
DEPARTMENT OF PUBLIC WORKS – ENGINEERING DIVISION
(M.G.L. Ch. 30, Sec. 39m)

PROJECT MANUAL:

NEWTON SOUTH HIGH SCHOOL

ATHLETIC FIELDS

INVITATION FOR BID #09-77

Prepared by:

Gale Associates, Inc.
163 Libbey Parkway
Weymouth, MA 02189
P: 781-335-6465

MARCH 2009

David B. Cohen, Mayor

CITY OF NEWTON, MASSACHUSETTS

PURCHASING DEPARTMENT
purchasing@newtonma.gov
Fax (617) 796-1227

April 14, 2009

ADDENDUM #4

INVITATION FOR BID #09-77

NEWTON SOUTH HIGH SCHOOL ATHLETIC RENOVATIONS

THIS ADDENDUM IS TO: Answer the following question:

Q1**.** Could you please state the hourly wage rate that should be used for; a) laborer and b) operator, for this project?

A1. All Contractors will be required to pay hourly wage rates for the respective trades/classifications in accordance with the Massachusetts General Laws, Chapter 149, Section 26 to 27H as defined in the "Prevailing Wage Rates" provided in the contract documents.

All other terms and conditions of this bid remain unchanged

PLEASE ENSURE THAT YOU ACKNOWLEDGE THIS ADDENDUM ON YOUR BID FORM

Thank you.
Re Cappoli
Chief Procurement Officer

CITY OF NEWTON, MASSACHUSETTS

PURCHASING DEPARTMENT
purchasing@newtonma.gov
Fax (617) 796-1227

April 13, 2009

ADDENDUM #3

INVITATION FOR BID #09-77

NEWTON SOUTH HIGH SCHOOL ATHLETIC RENOVATIONS

THIS ADDENDUM IS TO: Answer the following question:

Q1. Item #2 on the item sheet appears to be a lump sum amount, however next to the parenthetical price, "cubic yard," is listed as the unit, which does not apply to the type of work for this item. Should this be replaced with "lump sum?"

A1. All bidders shall replace the term "cubic yard" listed in Item #2 of the bid form with "lump sum".

All other terms and conditions of this bid remain unchanged

PLEASE ENSURE THAT YOU ACKNOWLEDGE THIS ADDENDUM ON YOUR BID FORM

Thank you.
Re Cappoli
Chief Procurement Officer

CITY OF NEWTON, MASSACHUSETTS

PURCHASING DEPARTMENT
purchasing@newtonma.gov
Fax (617) 796-1227

April 8, 2009

ADDENDUM #2

INVITATION FOR BID #09-77

NEWTON SOUTH HIGH SCHOOL ATHLETIC RENOVATIONS

THIS ADDENDUM IS TO: Answer the following questions and provide two attachments:

Q1**.** Is the utility company charge for the electric service connection to be paid by the city? If not can we carry an allowance in our bid?

A1. No. All bidders shall carry this cost in their base bid amount.

Q2. Please provide a distance to the electric service utility pole. It is not on the plans that we have.

A2. The distance to the electric service utility pole will need to be verified in the field. The request for electric service work order application indicates that the new service will be fed from the existing utility pole riser #733 to be confirmed by NSTAR.

Q3. Do the (2) two new NSTAR manholes require grounding and racking? If so, please provide details

A3. The NSTAR manholes will not require grounding and/or racking.

Q4. Please forward the existing loam test results.

A4. The testing performed for the on-site topsoil is attached. The topsoil was testing for particle size analysis and textural analysis. Contractors are will still be required to perform testing in accordance with specification section 02910 – Topsoil.

Q5. Can we use fibermesh additive to the concrete in lieu of reinforcing rebar in the concrete cur turf anchors at the synthetic fields?

A5. Fibermesh additive in lieu of reinforcing rebar in the synthetic turf concrete anchor curbs is not acceptable.

Q6. Please provide a cross section of materials at the batting cage, i.e. gravel, stonedust, infield mix, edging, etc.

A6. We have attached a sketch (SK-2) showing a cross section detail of the batting tunnel area.

Q7. Please confirm if we are to carry replacement material for the unsuitable unit price. Please identify what type of material we are to use.

A7. All bidders shall carry a cost for replacement of unsuitable material with "Ordinary Borrow" as described in Specification Section 02300 – Earthwork. This cost should be included in the unit price cost.

Q8. Should we follow the fill schedule in section 02300 or each individual specification section? Please clarify.

A8. The fill schedule shall be in accordance with specification section 02300.

Q9.Please clarify what model and type of castings we are to use on the CB's for the project. The plans, details and specifications do not match.

A9. The castings for the proposed concrete CB's shall be as noted on the details.

Q10. Is the 20' high protective sport netting to go to the top of the 4' fence at the multipurpose field (Field A) or to the ground?

A10. The netting shall connect to the top of the 4' fence fabric. It shall be tied to the top knuckles of the fabric with black cable ties.

Q11.Are the 4' fence posts to be in line with the posts for the protective netting at each end of Field A?

A11. The protective netting posts shall be set behind the 4' high fence, outside of the concrete anchor curb.

Q12. Is the 12" HDPE pipe going across Field B a solid or perforated pipe?

A12. The 12" HDPE pipe going across Field B shall be perforated.

Q13. Please provide a detail for the 10" cleanouts on Field A.

A13. The 10" cleanouts shall be Nyloplast, or equal, with solid covers.

Q14. Can we use mortar/non shrink grout in lieu of the kor-n-seal details at the culvert and drainage structures?

A14. All connections shall be kor-n-seal, or equal.

Q15. Have all associated utilities been notified of this project and been given plans?

A15. NSTAR has been notified of the work. All other utilities are handled by the City and all departments are aware for work to be performed. It will be the Contractor's responsibility to obtain permits associated with all utilities and also to notify Dig-Safe.

Q16. Have any utility work orders been acquired by the City?

A16. An NSTAR work order has been submitted for the project. The Contractor will be responsible for coordination of the work with NSTAR. All other work orders will be the responsibility of the Contractor.

Q17. Can we reuse the existing infield mix for reuse per detail C-20?

A17. Existing infield mix can be re-used after sieve testing is provided to Engineer for review and approval.

Q18. We received SK-1 in addendum #1. Do we need to adjust the elevations/dimensions so we get a constant slope to the collector pipes?

A18. The trench dimensions shown are minimum dimensions and shall be adjusted as required to achieve a constant slope, minimum 0.5%, to the collector pipes.

All other terms and conditions of this bid remain unchanged

PLEASE ENSURE THAT YOU ACKNOWLEDGE THIS ADDENDUM ON YOUR BID FORM

Thank you.
Re Cappoli
Chief Procurement Officer

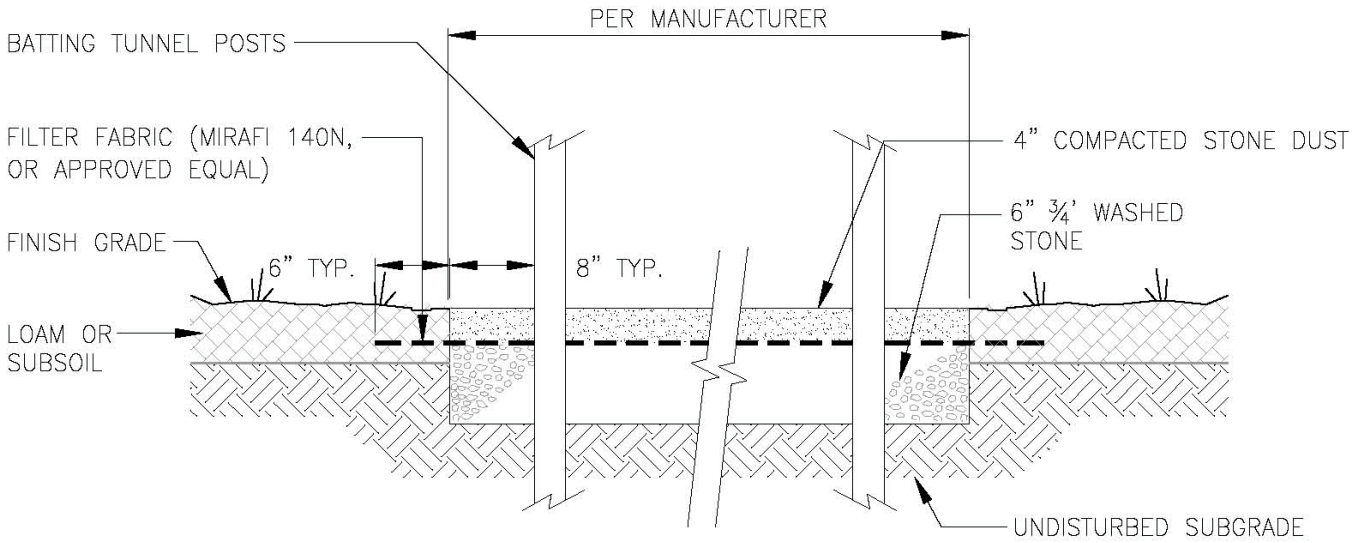

STONEDUST GRADATION

Passing Sieve	Percent by Weight
12.5 mm	100
6.3 mm	80-100
2.0 mm	55-75
425_m	10-40
75_m	0-20

NOTES:

1. LOCATION OF HOMEPLATE TO BE LOCATED IN FIELD BY OWNER.

ALL ITEMS ARE NEW UNLESS DESIGNATED AS EXISTING.

GALE

Gale Associates, Inc.
Engineers Planners

163 LIBBEY PARKWAY | WEYMOUTH, MA 02189
P 781.335.6465 F 781.335.6467
www.gainc.com

Boston Baltimore Orlando San Francisco

STONEDUST DETAIL IN BATTING TUNNEL

NEWTON SOUTH HIGH SCHOOL
ATHLETIC CAMPUS RENOVATION PROJECT
NEWTON, MASSACHUSETTS

PROJ. NO:	DRAWN	REVIEWED	CADD FILE
713050	NAC	PJT	713050_DET

DATE:	4/8/09
SCALE:	N.T.S.
REVISION:	

SK-2

SHEET 1 OF 1

HUMMEL & CO., INC.

#0775-01

Hummel & Co., Inc. • 35 King Street • P.O. Box 606 • Trumansburg, New York 14886 • Phone: (607) 387-5694 • Fax: (607) 387-9499 • Email: soildr1@zoom-DSL.com • Web Site: www.turfdoctor.com

MATERIALS TEST REPORT FOR
Newton South High School

REPORT TO: George Mihov
Gale Associates, Inc
P. O. Box 89018
Weymouth, MA 02189

DATE RECEIVED: March 27, 2008
TEST DATE: March 27 – April 4
REPORT DATE: April 7, 2008
Condition of sample: Very wet

PARTICLE SIZE ANALYSIS (ASTM F-1632)

		Gravel	Soil Separate %			Sieve Size/Sand Fraction Sand Particle Diameter % Retained				
Lab ID No.	Sample	No. 10 2 mm	Sand	Silt	Clay	No. 18 V. coarse 1 mm	No. 35 Coarse 0.5 mm	No. 60 Medium 0.25 mm	No. 140 Fine 0.10 mm	No. 270 V. fine 0.05 mm
24063-1	TP3 Topsoil	20.1	56.3	35.3	8.3	8.3	12.5	14.0	13.3	8.2
24063-2	TP5 Topsoil	19.0	62.8	30.3	6.9	9.3	11.5	14.7	18.3	9.0
24063-3	TP6 Topsoil	9.9	56.5	36.6	6.9	5.5	8.5	12.2	17.3	13.0

Dispersion Method: Reciprocating shaker

TEXTURAL CLASS /ORGANIC MATTER

Lab ID No.	Sample	Organic Matter[1] (%)	pH[2]	Textural Class
24063-1	TP3 Topsoil	8.10	6.8	Sandy loam
24063-2	TP5 Topsoil	5.39	5.3	Sandy loam
24063-3	TP6 Topsoil	4.88	6.2	Sandy loam

1 ASTM F1647, method 1
2 ASTM D4972

 This report may not be reproduced unless in full, without written permission from Hummel & Co. Inc.

ACCREDITED
#0775-01

PARTICLE SIZE ANALYSIS (ASTM F-1632)

Lab ID No.	Sample	Gravel	Soil Separate %			Sieve Size/Sand Fraction Sand Particle Diameter % Retained				
		No. 10 2 mm	Sand	Silt	Clay	No. 18 V. coarse 1 mm	No. 35 Coarse 0.5 mm	No. 60 Medium 0.25 mm	No. 140 Fine 0.10 mm	No. 270 V. fine 0.05 mm
24063-4	TP3 F1	0.0	21.2	76.5	2.3	0.0	0.2	0.2	2.0	18.8
24063-5	TP3 F2	11.3	33.5	61.6	4.9	3.5	3.8	5.2	9.8	11.2
24063-6	TP3 F1	25.6	68.3	25.7	6.0	10.8	13.5	17.2	17.5	9.3

Dispersion Method: Reciprocating shaker

TEXTURAL CLASS /ORGANIC MATTER

Lab ID No.	Sample	Organic Matter[1] (%)	pH[2]	Textural Class
24063-4	TP3 F1		5.2	Silt loam
24063-5	TP3 F2		7.1	Silt loam
24063-6	TP3 F1		6.0	Gravelly sandy loam

1 ASTM F1647, method 1
2 ASTM D4972

ACCREDITED
#0775-01

PHYSICAL PROPERTIES (ASTM F-1815-06 modified[1])

Lab ID No.	Sample	Particle Density[1] (g/cc)	Bulk Density (g/cc)	Ksat Infiltration Rate (in/hr)	Total Porosity %	Aeration Porosity %	Capillary Porosity[2] %
24063-1	TP3 Topsoil	2.48	1.15	0.8	53.6	12.5	41.2
24063-2	TP5 Topsoil	2.55	1.53	0.0	39.9	0.8	39.1
24063-3	TP6 Topsoil	2.56	1.35	0.6	47.3	11.0	36.3
	Desired			**>1**	**40 - 60**	**15 - 30**	**20 - 30**

1 ASTM D5550
2 Determined at 1/10 bar

Comments: The topsoil samples (Lab ID No. 24063-1 to 23063-3) were tested as received. We have no specifications for this project but it is my understanding that these are from existing sports fields. The results show that all three topsoil samples would be classified as sandy loams, per the U.S. Department of Agriculture classification system. There was a moderate amount of fine gravel in the samples TP3 Topsoil and TP5 Topsoil and a small amount in sample TP6 Topsoil.

The sand fraction predominated in the fine through coarse size fractions in the samples TP3 Topsoil and TP5 Topsoil and the very fine though medium size fractions in the sample TP6 Topsoil.

Sandy loams are fine textured soils that can be good grass growing soils because they have good water and nutrient storage capacities. Sandy loam soils are often the textural class of choice for soil-based sports fields. Soils of this type are prone to compaction and can be poorly drained when they are. Even if good tilth can be maintained, these soils are unlikely to be free draining. Therefore, any sports fields built with these soils should be crowned or pitched ($\geq$ 1.5%) to surface drain excess water from rainfall or snow melt.

Care should be taken during construction to prevent excessive compaction. The soils should never be handled when wet. Only lightweight equipment with low ground pressure should be used for the placement and grading of the soil. You may want to specify a maximum compaction level.

Organic matter is another component of topsoil quality. For fine turf areas we recommend an organic matter content of between 4 and 8%. You can see that all three soil samples had organic matter contents within this range.

The pH was acceptable in the samples TP3 Topsoil and TP6 Topsoil, and was low enough to justify lime in sample TP5 Topsoil.

Per your request we ran physical properties on the soils after they were compacted with a moderate compaction treatment. Realize that the physical properties reported are what can be expected with the soils compacted to the densities reported. If the in-place density is higher than this, the physical properties are likely to be less favorable, and vice versa.

The infiltration rates were low in the samples TP3 Topsoil and TP6 Topsoil and was negligible in the sample TP5 Topsoil

The total porosity was acceptable in all three samples, although it was at the low end of the acceptable range in the sample. The density was considerably higher in the sample TP5 Topsoil, suggesting that it is more prone to compaction. This higher level of compaction has had a profound affect on the physical properties.

The aeration porosity is made up of relatively large pores that conduct water under saturated conditions. When drained, they are filled with air providing the oxygen that is necessary for root growth. The capillary porosity is made up of small pores that hold water against the force of gravity, retaining much of it for plant use. Ideally, a soil would contain a nearly equal distribution of air and water filled pore space after free drainage, a condition we refer to as field capacity. This was determined at 1/10 bar pressure, which is normally considered field capacity for sandier soils.

The results show that the aeration porosity was low in all three samples, especially TP5 Topsoil. The water retention, as reflected in the capillary porosity was high in all three samples. The results suggest that fields built with these three samples would have low vertical drainage, and after free drainage would have low aeration and high water retention.

The results point out the need to provide sufficient pitch to the fields to remove excess water. Consideration should also be given to a by-pass drainage system. A bypass drainage system is a network of trenches cut on fairly close spacings. The trench spoils are removed, small diameter pipe is installed in the trench, and the trench is backfilled to the surface with a specified sand. In some more elaborate systems, sand grooves are also cut at right angles to these trenches, so that you have a grid system to quickly remove water off the surface of the field. Most installations I have seen are just the sand trenches. Installers of these systems include: Turf Services Inc (616-842-4975, www.turfservicesinc.com), Landtek (631-691-2381, www.Landtekgroup.com), Hummer Turfgrass Systems (800-872-8873, www.usaturf.com), Turf Drainage Systems (519-227-0731, www.tdsdrainage.com), and Tri-Turf (631-209-1736, www.tri-turf-inc.com). You can find out more about these systems on their websites.

The subsoil samples TP3 F1 and TP3 F2 would be classified as silt loams. There was no gravel in the sample TP3 F1 and a moderate amount in the sample TP3 F2.

The sample TP3 F1 would be classified as a sandy loam. The sand in this soil was distributed into the fine through very coarse sand fractions.

These soils were very wet and showed gray and rust colored mottling; indications of prolonged water logged conditions. If these are subsoil samples and there was a water table present when the cores were pulled, a subsurface drainage system should be installed.

Please let me know if you have any questions on these results or comments. Thank you.

Norman W. Hummel Jr.
President

CITY OF NEWTON, MASSACHUSETTS

PURCHASING DEPARTMENT
purchasing@newtonma.gov
Fax (617) 796-1227

April 7, 2009

ADDENDUM #1

INVITATION FOR BID #09-77

NEWTON SOUTH HIGH SCHOOL ATHLETIC RENOVATIONS

THIS ADDENDUM IS TO:

Answer questions discussed at the on-site pre-bid meeting:

Q1**.** What size and type of construction fence do want us to use?

A1. The construction fence shall be 6' high, chain link fence as noted on the contract drawings

Q2. Does the Town of Newton want any of the excess loam or infield mix from the project?

A2. The excess loam shall be hauled to the Rumford Avenue Recycling Center as noted on the contract drawings. The infield mix shall become the property of the Contractor.

Q3.Please provide a detail of the panel drain through the cross sections of the natural grass athletic fields and the infield mix areas.

A3. See attached sketch.

Q4. Do you want a 4" layer of stone under the infield mix areas?

A4. No. The 4" layer shall be installed only under the areas to receive the sand-based root-zone mix.

Q5. The storage shed on the layout and materials drawings is called out as a 13' x 13' while the specifications (11490) call out a 12'x17'. Please clarify.

A5. The storage shed shall be dimensioned in accordance with the product specified in specification section 11490.

Q6. Is the ticket booth (11490) by point #42 on the layout and materials plan?

A6. Yes.

Q7.Section 11490 – 2.06 – B. – mentions relocating a scoreboard? Please clarify

A7. The existing scoreboard at the track and field area shall be stored on-site at a location to be determined. There are no existing scoreboards to be relocated/re-installed.

Q8.What is the finish for steel support beams for the scoreboards?

A8. The steel supports beams for the scoreboards shall be black powder coated.

Q9. Will the Owner be hiring a geotechnical/testing firm to perform the required tests or should the contractor carry the costs for all the required tests for the project?

A9. All testing requirements as noted in the contract specifications will be the responsibility of the General Contractor.

Q10. Are there any other items that require a stamped engineered drawing other than the bleacher/press box/elevator?

A10. No.

Q11. In fill areas are we required to remove all loam?

A11. Yes.

Q12. Can we use existing loam as common borrow in natural grass areas?

A12. No.

Q13. Will there be a provision for escalation/de-escalation with regards to asphalt and the associated liquid asphalt price?

A13. No there are no price adjustments for this project.

Q14. Will the Order of Conditions change, if so when will we be notified?

A14. For purposes of bidding, all bidders shall assume that there will be not change to the Order of Conditions.

Q15. Are all the proprietary specifications "or equal"?

A15. This project is subject to Massachusetts Public Bid Laws and all products specified are "or equal".

All other terms and conditions of this bid remain unchanged

PLEASE ENSURE THAT YOU ACKNOWLEDGE THIS ADDENDUM ON YOUR BID FORM

Thank you.
Re Cappoli

Chief Procurement Officer

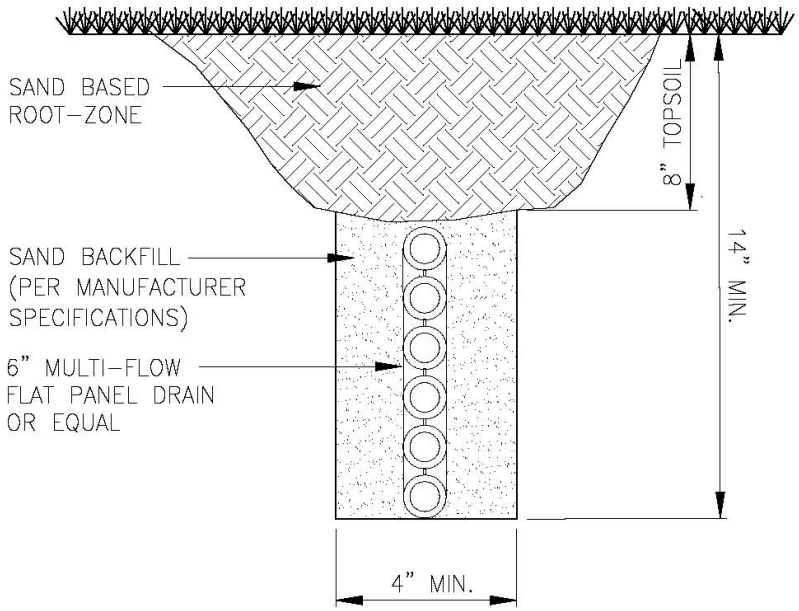

NATURAL TURF

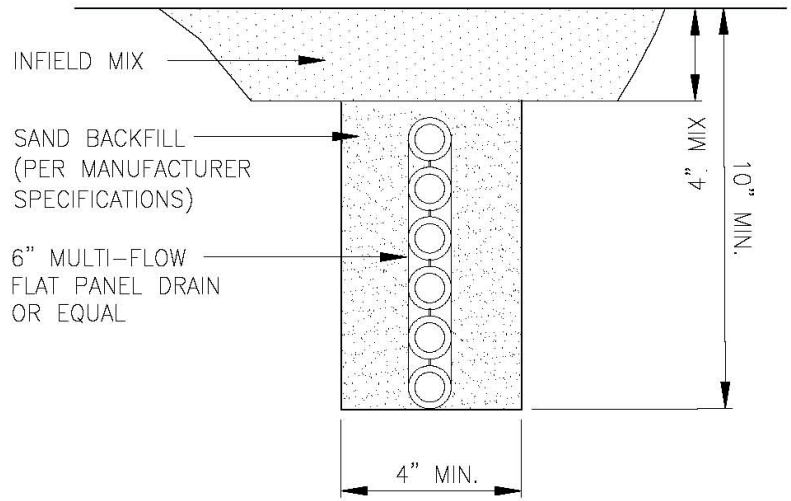

INFIELD MIX

ALL ITEMS ARE NEW UNLESS DESIGNATED AS EXISTING.

GALE

Gale Associates, Inc.
Engineers Planners

153 LIBBEY PARKWAY | WEYMOUTH, MA 02189
P 781.335.6465 F 781.335.6487
www.gainc.com

Boston Baltimore Orlando San Francisco

FLAT PANEL DRAIN INSTALLATION
IN NATURAL TURF FIELDS

NEWTON SOUTH HIGH SCHOOL
ATHLETIC CAMPUS RENOVATION PROJECT
NEWTON, MASSACHUSETTS

PROJ. NO:	DRAWN	REVIEWED	CADD FILE
713050	NA	PJT	713050_DET

DATE:	4/6/09
SCALE:	N.T.S.
REVISION:	

SK-1

SHEET 1 OF 1

CITY OF NEWTON
PROJECT MANUAL TABLE OF CONTENTS

Newton South High School
Athletic Fields

	No. Pages
Cover Page	1
Table of Contents	3
Part 1 - Bidding Documents, Contract Forms, and Conditions of the Contract	
1. - Invitation for Bid	1
2. - Instructions to Bidders	3
3. - Bid Form	2
▪ Bid Item Sheets	1
4. - Bidder's Qualification Forms	
▪ Bidders Qualification Form and References	2
5. - Contract Forms (Informational only. Not required at time of bid submittal)	
▪ Owner - Contractor Contract	2
▪ Certificate of Authority - Corporate	1
▪ Attestation	1
▪ Performance Bond	1
▪ Payment Bond	1
6. - General Conditions of the Contract	8
7. - MWBE/AA Requirements	10
▪ Minority/Women Business Enterprise Plan, December 1999	
▪ Supplemental Equal Employment Opportunity Anti-Discrimination and Affirmative Action Program	
8. - Wage Rate Requirements	12
▪ Department of Labor Minimum Wage Rates	
▪ Statement of Compliance	
▪ Weekly Payroll Report Form	
9. - ATTACHMENT A - Trench Permit	4
Part 2 - General Requirements and Project Specifications	
1. - Summary of Work and Specific Requirements - SCOPE OF WORK	3
2. - Special Provisions	2
3. - Special Conditions of the Contract for Public Works Construction	3
4. - Drawings – *Must be obtained through the Purchasing Department*	33

5.	-	Section 01010 – Summary of Work	1
6.	-	Section 01040 – Existing Conditions	1
7.	-	Section 01050 – Conduct of the Work	1
8.	-	Section 01300 – Submittals – Shop Drawings, Product Data, and Samples	3
9.	-	Section 01500 – Temporary Facilities	2
10.	-	Section 01510 – Protection	2
11.	-	Section 01520 – Cleaning Up	2
12.	-	Section 01700 – Project Closeout	2
13.	-	Section 01720 – Surveys and Record Drawings	2
14.	-	Section 02020 – Erosion and Sediment Control	5
15.	-	Section 02060 – Site Clearing	2
16.	-	Section 02070 – Selective Demolition	2
17.	-	Section 02300 – Earthwork	7
18.	-	Section 02320 – Aggregate Base Course	2
19.	-	Section 02513 – Bituminous Concrete Pavement	2
20.	-	Section 02532 – Synthetic Field Surfacing	11
21.	-	Section 02535 – Synthetic Track Surfacing System	4
22.	-	Section 02536 – Track Line-Marking	2
23.	-	Section 02620 – Drainage System	6
24.	-	Section 02810 – Irrigation System	14
25.	-	Section 02812 – Irrigation Well Pumping and Control System	16
26.	-	Section 02814 – Irrigation Well Installation, Development, and Testing	10
27.	-	Section 02831 – Chain Link Fence & Gates	6
28.	-	Section 02920 – Topsoil	2
29.	-	Section 02931 – Planting	4
30.	-	Section 02935 – Sodding	7
31.	-	Section 02985 – Turf Seeding, Fertilizing, and Mulching	9
32.	-	Section 03100 – Concrete Formwork	4
33.	-	Section 03200 – Concrete Reinforcement	4
34.	-	Section 03300 – Cast-In-Place Concrete	9

35. - Section 11480 – Track and Field Equipment 2

36. - Section 11490 – Athletic Field Equipment 4

37. - Section 13126 – Aluminum Seating System 4

38. - Section 13127 – Modular Pressbox 4

39. - Section 13320 – Vertical Platform Lift 3

40. - Section 16010 – Basic Electrical Requirements 1

41. - Section 16111 – Conduit 4

42. - Section 16118 – Ductbank 4

43. - Section 16123 – Building Wire and Cable 4

44. - Section 16170 – Grounding and Bonding 3

45. - Section 16195 – Electrical Identification 2

46. - Section 16470 – Panelboards 3

END OF SECTION

CITY OF NEWTON
PURCHASING DEPARTMENT
INVITATION FOR BID# 09-77

The City of Newton invites sealed bids from Contractors for

NEWTON SOUTH HIGH SCHOOL
Athletic Fields

Pre-bid conference at: **11:30 a.m., April 2, 2009**
Bids will be received until: **11:30 a.m., April 16, 2009**
at the Purchasing Department, Room 204, Newton City Hall, 1000 Commonwealth Ave., Newton, MA 02459. Immediately following the deadline for bids all bids received within the time specified will be publicly opened and read aloud.

Work under this contract shall consist of: The redevelopment/renovation of the existing athletic field campus at Newton South High School generally includes the following:

1. Construction of a new synthetic running track,
2. Construction of a new "infilled" synthetic turf football field inside the proposed synthetic running track
3. Construction of a new "infilled" synthetic turf multipurpose field
4. Construction of a new natural turf baseball field with a 90-ft diamond
5. Construction of a new natural turf softball field with a 60-ft diamond

Time is of the essence in the performance of the work of this contract.
Anticapted start date is: ***May 25, 2009***
Completion date is: ***Synthetic Turf Fields – September 4, 2009***
Natural Turf Fields and other site amenties – October 2, 2009

Contract Documents will be available on line at **www.ci.newton.ma.us/bids** or for pickup at the Purchasing Department, **after 10:00 a.m., March 26, 2009.** There is no charge for contract documents. **Drawings must be obtained through the Purchasing Department, call to ensure availability (617) 796-1220.**

All bids must be accompanied by a bid deposit in an amount that is not less than five percent (5%) of the value of the bid, including all add alternates. Bid deposits, payable to the City of Newton, shall be either in the form of a bid bond, cash, certified check, or a treasurer's or cashier's check issued by, a responsible bank or trust company.

All contractors are hereby notified of the TRENCH PERMIT pursuant to G.L. c.82A, section1 and 520 CMR 7.00 et seq (as ammended). Please refer to Item 1 - Mobilization and ATTACHMENT - A TRENCH PERMIT.

Bids must be submitted with one ORIGINAL and one COPY.

All bids are subject to the provisions of M.G.L. Chapter 30, Section 39M. **Wages are subject** to minimum wage rates determined by the Massachusetts Department of Labor and Industries pursuant to M.G.L. Chapter 149, Sec. 26 to 27H. The schedule of wage rates applicable to this contract is included in the bidding documents. In addtion, the prevailing wage schedule will be updated annually for all public construction projects lasting longer than one (1) year. You will be required to pay the rates set out in any updated prevailing wage schedule. Increases in prevailing wage schedules will not be the basis for change order requests. The successful bidder will be required to provide a Certificate of Insurance demonstrating current coverage of the type and amounts set forth in the Project Manual**.** The successful bidder will be required to furnish both a **Performance Bond** and **Labor and Materials Payment Bond in the amount of 100%** of the contract total.

It is the sole responsibility of the contractor downloading these bids to ensure they have received any and all addenda prior to the bid opening. Bidders are encourage to email us at **purchasing@newtonma.gov** to be added to the bidders list.

The City of Newton reserves the right to waive any informalities in any or all bids, or to reject any or all bids, if it be in the public interest to do so.

CITY OF NEWTON
Re Cappoli
Chief Procurement Officer

March 26, 2009

CITY OF NEWTON
DEPARTMENT OF PURCHASING
INSTRUCTIONS TO BIDDERS

ARTICLE 1 - BIDDER'S REPRESENTATION

1.1 Each General Bidder (hereinafter called the "Bidder") by making a bid (hereinafter called "bid") represents that:

1. The Bidder has read and understands the Contract Documents and the bid is made in accordance therewith.

2. The Bidder has visited the site and is familiar with the local conditions under which the Work has to be performed.

1.2 Failure to so examine the Contract Documents and site will not relieve any Bidder from any obligation under the bid as submitted.

ARTICLE 2 - REQUEST FOR INTERPRETATION

2.1 Bidders shall promptly notify the City of any ambiguity, inconsistency, or error which they may discover upon examination of the Contract Documents, the site, and local conditions.

2.2 Bidders requiring clarification or interpretation of the Contract Documents shall make a written request to the *Chief Procurement Officer*, at purchasing@newtonma.gov or via facsimile (617) 796-1227. The City will answer such requests if received seven (7) calendar days before the date for receipt of the bids.

2.3 Interpretation, correction, or change in the Contract Documents will be made by Addendum which will become part of the Contract Documents. The City will not be held accountable for any oral instruction.

2.4 Addenda will be faxed or mailed First Class postage by the USPS, to every individual or firm on record as having taken a set of Contract Documents.

2.5 Copies of addenda will be made available for inspection at the location listed in the Invitation for Bids where Contract Documents are on file, in addition to being available online at **www.ci.newton.ma.us/bids**.

2.6 Bidders downloading information off the internet web site are soley responsible for obtaining any addenda prior to the bid opening. If the bidder makes themselves known to the Purchasing Dept., at purchasing@newtonma.gov or via facsimile (617) 796-1227, they shall be placed on the bidder's list. Bidders must provide the Purchasing Dept. with their company's name, street address, city, state, zip, phone, fax and **INVITATION FOR BID NUMBER# 09-77**.

ARTICLE 3 - MBE PARTICIPATION

3.1 By bidding on this project each Bidder certifies its intent to comply with the City of Newton Minority/Women Business Enterprise Plan dated December 1999 to further expand business opportunities for minority firms. A copy of this plan is incorporated in the Project Manual.

3.2 Bidders are advised that the City of Newton Supplemental Equal Employment Opportunity Anti-Discrimination and Affirmative Action Program is applicable to all construction contracts in excess of $50,000.00. A copy of this program is incorporated in the Project Manual. A Contractor's Certification form must be signed by all successful low bidders prior as a condition of contract award. No contract shall be executed or valid unless the contractor has executed and submitted the Contrctor's Certification. (see Attachment B to the Supplemental Equal Employment Opportunity Anti-Discrimination and Affirmative Action Program.)

3.3 The awarded bidder shall, prior to the award of any sub-contract, obtain from each of its sub-contractors the Sub-Contractors Certification certifying the Sub-Contractor shall comply with the minority manpower ratio and specific affirmative action steps described in the Supplemental Equal Employment Opportunity Anti-Discrimination and Affirmative Action Program contained in the Project Manual. (see Attachment C to the Supplemental Equal Employment Opportunity Anti-Discrimination and Affirmative Action Program.)

ARTICLE 4 - PREPARATION AND SUBMISSION OF BIDS

4.1 Bids shall be submitted on the "Bid Form" as appropriate, furnished by the City.

4.2 All entries on the Bid Form shall be made by typewriter or in ink.

4.3 Where so indicated on the Bid Form, sums shall be expressed in both words and figures. Where there is a discrepancy between the bid sum expressed in words and the bid sum expressed in figures, the words shall control.

4.4 Bid Deposits shall be submitted in the amount specified in the Invitation for Bids. They shall be made payable to the City of Newton and shall be either in the form of cash, certified check, treasurer's or cashier's check issued by a responsible bank or trust company, or a bid bond issued by a surety licensed to do business in the Commonwealth of Massachusetts; and shall be conditioned upon the faithful performance by the principal of the agreements contained in the bid.

Bid deposits of the three (3) lowest responsible and eligible Bidders shall be retained until the execution and delivery of the Owner/Contractor agreement.

4.5 The Bid, including the bid deposit shall be enclosed in a sealed envelope with the following plainly marked on the outside:

* GENERAL BID FOR:
* NAME OF PROJECT AND **INVITATION NUMBER**
* BIDDER'S NAME, BUSINESS ADDRESS, AND PHONE NUMBER

4.6 Date and time for receipt of bids is set forth in the Invitation for Bids.

4.7 Timely delivery of a bid at the location designated shall be the full responsibility of the Bidder.

4.8 Bids shall be submitted with **one original and one copy.**

4.9 All contractors are hereby notified of the TRENCH PERMIT pursuant to G.L. c.82A, section1 and 520 CMR 7.00 et seq (as ammended). Please reference ATTACHMENT - A TRENCH PERMIT (4 pages).

4.10 The use of a company or brand name, except with software, in the specifications is intended solely for the purpose of describing a standard of quality, functional features and performance standards required and is not intended to limit or restrict competition. The bidder offering a product which they deem equal to the brand and model specified in the solicitation provided that the brand name specified is not followed by the words “no sbustitutions”, **shall indicate so on the bid form and Minimum Requirements – Exception form** and submit with their bid the manufacturers specifications/descriptive literature for the product they are offering. **Failure to submit manufacturers specifications/descriptive literature with bids may be cause for bid rejection.**

“Equality” - An item equal to that named or described in the specifications of the contract may be furnished by the Vendor and the naming of any commercial name, trademark or other identification shall not be construed to exclude any item or manufacturer not mentioned by name or as limiting competition but shall establish a standard of equality only. An item shall be considered equal to the item so named or described if (1) it is at least equal in quality, durability, appearance, strength and design; (2) it will perform at least equally the function imposed by the general design for the work being contracted for or the material being purchased; and (3) it conforms substantially, even with deviations, to the detailed requirements for the item in the specifications. The name and identification of all materials other than the one specifically named shall be submitted to the City in writing for approval, at time of bid, use or fabrication of such items. Subject to the provisions of M.G.L., Ch. 30, Sec. 39J, approval shall be at the sole discretion of the City, shall be in writing to be effective, and the decision of the City shall be final. The City may require tests of all materials so submitted to establish quality standards at the Vendor's expense. All directions, specifications and recommendations by manufacturers for installation, handling, storing, adjustment and operation of their equipment shall be complied with; responsibility for proper performance shall continue to rest with the Vendor.

4.11 Be advised that a new Massachusetts law has been enacted that required all employees who work on Massachusetts public works construcion sites must have no less than 10 hours of OSHA-approved safety and health training. See Chapter 306 of the Acts of 2004, which will become effective July 1, 2006.

1. This requirement will apply to any general bid or sub bid submitted on or after July 1, 2006 and to any contract awarded on or after July 1, 2006.
2. This law directs the Massachusetts Attorney General to restrain the award of construction contracts to any contractor who is in violation to this requirement and to restrain the performance of these contracts by non-complying contractors.
3. The contractor and all subcontractors on this project will be required to provide certification of compliance with this requirement. Non-compliance with this new Massachusetts Law will disquality you from bidding on public contracts.

ARTICLE 5 - ALTERNATES

5.1 Each Bidder shall acknowledge Alternates (if any) in Section C on the Bid Form.

5.2 In the event an Alternate does not involve a change in the amount of the base bid, the Bidder shall so indicated by writing "No Change", or "N/C" or "0" in the space provided for that Alternate.

5.3 Bidders shall enter on the Bid Form a single amount for each Alternate which shall consist of the amount for work performed by the Contractor.

5.4 The low Bidder will be determined on the basis of the sum of the base bid and the accepted alternates.

ARTICLE 6 - WITHDRAWAL OF BIDS

6.1 Any bid may be withdrawn prior to the time designated for receipt of bids on written or telegraphic request. Telegraphic withdrawal of bids must be confirmed over the Bidder's signature by written notice postmarked on or before the date and time set for receipt of bids.

6.2 Withdrawn bids may be resubmitted up to the time designated for the receipt of bids.

6.3 No bids shall be withdrawn for sixty days, Saturdays, Sundays and legal holidays excluded, after the opening of the bids.

ARTICLE 7 - CONTRACT AWARD

7.1 The City of Newton will award the contract to the lowest eligible and responsible Bidder within sixty days, Saturdays, Sundays, and legal holidays excluded after the opening of bids.

7.2 The City of Newton reserves the right to waive any informalities in or to reject any or all Bids if it be in the public interest to do so.

7.3 As used herein, the term "lowest responsible and eligible Bidder" shall mean the Bidder (1) whose bid is the lowest of those bidders possessing the skill, ability and integrity necessary for the faithful performance of the work; (2) who shall certify that he is able to furnish labor that can work in harmony with all other elements of labor employed or to be employed in the work; (3) who, where the provisions of section eight B of chapter twenty-nine apply, shall have been determined to be qualified thereunder.

7.4 It is the purpose of the City not to award this contract to any bidder who does not furnish evidence satisfactory to the Chief Procurement Officer that he has the ability and experience in this class of work and that he has sufficient capital and plant to enable him to prosecute the same successfully and to complete it within the specified time and that he will complete it in accordance with the terms thereof.

7.5 Subsequent to the award and within five (5) days, Saturday, Sundays and legal holidays excluded, after the prescribed forms are presented for signature, the successful Bidder shall execute and deliver to the City a Contract in the form included in the Contract Documents in such number of counterparts as the City may require.

7.6 In the event that the City receives low bids in identical amount from two or more responsive and responsible Bidders, the City shall select the successful Bidder by a blind selection process such as flipping a coin or drawing names from a hat. The low Bidders who are under consideration will be invited to attend and observe the selection process.

ARTICLE 8 - TAXES

8.1 The Bidder shall not include in this bid any tax imposed upon the sale or rental of tangible personal property in this Commonwealth, such as any and all building materials, supplies, services and equipment required to complete the work.

8.2 The City is exempt from payment of the Massachusetts Sales Tax, and the Bidder shall not include any sales tax on its bid. The City’s exemption Number is E-046-001-404.

END OF SECTION

CITY OF NEWTON

DEPARTMENT OF PURCHASING

BID FORM #09-77

A. The undersigned proposes to furnish all labor and materials required in accordance with the Contract Documents supplied by the City of Newton entitled:

NEWTON SOUTH HIGH SCHOOL
ATHLETIC FIELDS

for the contract price specified below, subject to additions and deduction according to the terms of the specifications.

B. This bid includes addenda number(s) _____, _____, _____, _____,

C. The proposed contract price is:

_____DOLLARS ($ _____).
(The figure inserted above shall be the Total Bid Price as computed on the Item Sheets attached hereto.)

COMPANY: _____

D. The undersigned has completed and submits herewith the following documents:

- ❑ Bid Form - signed, 2 pages
- ❑ Item Sheet – 1 page
- ❑ Bidder's Qualification Form and References;
- ❑ A five percent (5%) bid deposit/bid guarantee.

E. The undersigned agrees that, if s/he is selected as general contractor, s/he will within five days, Saturdays, Sundays and legal holidays excluded, after presentation thereof by the awarding authority, execute a contract in accordance with the terms of this bid and furnish a labor and materials or payment bond, each of a surety company qualified to do business under the laws of the commonwealth and satisfactory to the awarding authority and each in the sum of the contract price, the premiums for which are to be paid by the general contractor and are included in the contract price.

The undersigned hereby certifies that s/he is able to furnish labor that can work in harmony with all other elements of labor employed or to be employed on the work and that s/he will comply fully with all laws and regulations applicable to awards made subject to section forty-four A of M.G.L. Chapter 30, s 39M.

The undersigned certifies that he is able to furnish labor that can work in harmony with all other elements of labor employed or to be employed in the work; (2) that all employees to be employed at the worksite will have successfully completed a course in construction safety and health approved by the United States Occupational Safety and Health Administration (“OSHA”) that is at least 10 hours in duration at the time the employee begins work and who shall furnish documentation of successful completion of said course with the first certified payroll report for each employee; and (3) that all employees to be employed in the work subject to this bid have successfully completed a course in construction safety and health approved by the United States OSHA that is at least 10 hours in duration. The undersigned understands that any employee found on a worksite subject to this section without documentation of successful completion of a course in construction safety and health approved by the United States Occupational Safety and Health Administration that is at least 10 hours in duration shall be subject to immediate removal.

The undersigned further certifies under the penalties of perjury that this bid is in all respects bona fide, fair and made without collusion or fraud with any other person. As used in this subsection the word "person" shall mean any natural person, joint venture, partnership, corporation or other business or legal entity. The undersigned further certifies under penalty of perjury that the said undersigned is not presently debarred from doing public construction work in the Commonwealth under the provisions of section twenty-nine F of chapter twenty-nine, or any other applicable debarment provisions of any other chapter of the General Laws or any rule or regulation promulgated thereunder.

Date _____

_____
(Name of General Bidder)

BY: _____

_____
(Printed Name and Title of Signatory)

_____
(Business Address)

_____
(City, State, Zip)

_____/_____
(Telephone) (FAX)

_____
(E-mail Address)

NOTE: If the bidder is a corporation, indicate state of incorporation under signature, and affix corporate seal; if a partnership, give full names and residential addresses of all partners; if an individual, give residential address if different from business address; and, if operating as a d/b/a give full legal identity. Attach additional pages as necessary.

END OF SECTION

ITEM SHEET PAGE 1

The Contractor shall insert prices for each item in ink, in both words and figures, and is to show a total bid price. In the event a discrepancy between the written words and figures, the written words shall govern. In the event an error in the bidders total bid price, the corrected total bid obtained by the summation of the products of the unit prices multiplied by the respective quantities shall stand as the bidder's total bid price.

The Contractor is advised to review any related plans, conduct a full site review, and read all the provisions in the document before inserting prices.

ITEM DESCRIPTION & BID PRICE	ESTIMATED QUANTITIES	UNIT	TOTAL COST
ITEM: **1 – EXTRA EXCAVATION TO REMOVE UNSUITABLE MATERIAL** THE SUM OF: _____ DOLLARS AND_____ CENTS ($_____) PER **CUBIC YARD**	**1,500**	**C.Y.**	$_____
ITEM: **2 – INSTALLATION OF IRRIGATION SUPPLY WELLS** THE SUM OF ITEMS 1-11: _____ DOLLARS AND_____ CENTS ($_____)PER **CUBIC YARD** **Contractor shall include the bid item sheet as found in Specification Section 02814 – IRRIGATION WELL INSTALLATION, DEVELOPMENT, AND TESTING**	**1**	**LS.**	$_____
ITEM: **3 – ALL OTHER WORK AS NOTED IN THE CONTRACT DOCUMENTS** THE SUM OF: _____ DOLLARS AND_____ CENTS ($_____) PER **LUMP SUM**	**1**	**LS**	$_____

TOTAL FOR ALL ITEMS: $_____

Total Bid Price must be entered into paragraph "C" of the Bid Form

END OF SECTION

CITY OF NEWTON

BIDDER'S QUALIFICATIONS AND REFERENCES FORM

All questions must be answered, and the data given must be clear and comprehensive. Please type or print legibly. If necessary, add additional sheet for starred items. This information will be utilized by the City of Newton for purposes of determining bidder responsiveness and responsibility with regard to the requirements and specifications of the Contract.

1. FIRM NAME: _____

2. WHEN ORGANIZED: _____

3 INCORPORATED? ☐ YES ☐ NO DATE AND STATE OF INCORPORATION: _____

* 4. LIST ALL CONTRACTS CURRENTLY ON HAND, SHOWING CONTRACT AMOUNT AND ANTICIPATED DATE OFCOMPLETION:

_____
_____
_____
_____
_____

* 5. HAVE YOU EVER FAILED TO COMPLETE A CONTRACT AWARDED TO YOU?
☐ YES ☐ NO
IF YES, WHERE AND WHY?

_____
_____

* 6. HAVE YOU EVER DEFAULTED ON A CONTRACT? ☐ YES ☐ NO
IF YES, PROVIDE DETAILS.

_____
_____

* 7. LIST YOUR VEHICLES/EQUIPMENT AVAILABLE FOR THIS CONTRACT:

_____
_____
_____
_____
_____
_____
_____

* 8. IN THE SPACES FOLLOWING, PROVIDE INFORMATION REGARDING CONTRACTS COMPLETED BY YOUR FIRM SIMILAR IN NATURE TO THE PROJECT BEING BID. A MINIMUM OF FOUR (4) CONTRACTS SHOULD BE LISTED. PUBLICLY BID CONTRACTS ARE PREFERRED, BUT NOT MANDATORY.

PROJECT NAME: _____
OWNER: _____
CITY/STATE: _____
DOLLAR AMOUNT: $ _____ DATE COMPLETED: _____
PUBLICALY BID? ☐ YES ☐ NO

TYPE OF WORK?: _____
CONTACT PERSON: _____ TELEPHONE #: (____)_____
CONTACT PERSON'S RELATION TO PROJECT?: _____
(i.e., contract manager, purchasing agent, etc.)
_____

PROJECT NAME: _____
OWNER: _____
CITY/STATE: _____
DOLLAR AMOUNT: $ _____ DATE COMPLETED: _____
PUBLICALY BID? ˆYES ˆNO
TYPE OF WORK?: _____
CONTACT PERSON: _____ TELEPHONE #: (____)_____
CONTACT PERSON'S RELATION TO PROJECT?: _____
(i.e., contract manager, purchasing agent, etc.)
_____

PROJECT NAME: _____
OWNER: _____
CITY/STATE: _____
DOLLAR AMOUNT: $ _____ DATE COMPLETED: _____
PUBLICALY BID? ˆYES ˆNO
TYPE OF WORK?: _____
CONTACT PERSON: _____ TELEPHONE #: (____)_____
CONTACT PERSON'S RELATION TO PROJECT?: _____
(i.e., contract manager, purchasing agent, etc.)
_____

PROJECT NAME: _____
OWNER: _____
CITY/STATE: _____
DOLLAR AMOUNT: $ _____ DATE COMPLETED: _____
PUBLICALY BID? ˆYES ˆNO
TYPE OF WORK?: _____
CONTACT PERSON: _____ TELEPHONE #: (____)_____
CONTACT PERSON'S RELATION TO PROJECT?: _____
(i.e., contract manager, purchasing agent, etc.)

9. The undersigned certifies that the information contained herein is complete and accurate and hereby authorizes and requests any person, firm, or corporation to furnish any information requested by the City of Newton in verification of the recitals comprising this statement of Bidder's qualifications and experience.

DATE: _____ BIDDER: _____

SIGNATURE: _____

PRINTED NAME: _____ TITLE: _____

END OF SECTION

CONTRACT FORMS

The awarded bidder will be required to complete and submit the following documents in order to execute a contract pursuant to this bid.

The forms are provided for informational purposes only.

None of the following forms are required at the time of bid submittal.

CITY-CONTRACTOR AGREEMENT

CONTRACT NO. C- _____

THIS AGREEMENT made this ___ day of _____ in the year Two Thousand and Nine by and between the CITY OF NEWTON, a municipal corporation organized and existing under the laws of the Commonwealth of Massachusetts, hereinafter referred to as the CITY, acting through its Chief Procurement Officer, but without personal liability to him, and

hereinafter referred to as the CONTRACTOR.

The parties hereto for the consideration hereinafter set forth agree as follows:

ARTICLE 1. **STATEMENT OF WORK.** The Contractor shall furnish all labor, materials, and equipment and perform all work required in strict accordance with the Contract Documents for the following project:

Newton South High School
Athletic Fields

ARTICLE 2. **TIME OF COMPLETION.** The Contractor shall commence work under this Contract on the date specified in the written notice of the City to proceed and shall fully complete all work hereunder within, **120 calendar days,** the time specified in the Summary of Work and Specific Work Requirements of the Project Manual. Time is of the essence with regard to this contract. Failure to complete within the time specified shall be subject to the assessment of liquidated damages in accordance with the provisions contained in the Project Manual.

ARTICLE 3. **THE CONTRACT PRICE.** The City shall pay the Contractor for the full and satisfactory performance of the Contract a sum not to exceed:

($)

ARTICLE 4. **CONTRACT DOCUMENTS.** The Contract Documents consist of the following documents which are either attached to this Agreement or are incorporated herein by reference:

a. This CITY-CONTRACTOR Agreement;

b. The City's INVITATION FOR BID #09-77 issued by the Purchasing Department;

c. The Project Manual for Newton South High School - Athletic Fields including the Instructions to Bidders; General Conditions; Special Conditions; MWBE/AA Requirements, Trench Permit, Wage Rate Requirements and Wage Rate Schedule(s) including any updated prevailing wage rate schedules if applicable; The Supplementary Special Conditions; General Requirements and Project Specifications; and Drawings, if included or referenced therein;

d. Addenda Number(s)____ ;

e. The Bid Response of the CONTRACTOR submitted for this Project and accompanying documents and certifications;

f. Certificate(s) of Insurance and surety bond(s) submitted by the CONTRACTOR in connection with this Project;

g. Duly authorized and executed Amendments, Change Orders or Work Orders issued by the CITY after execution of this CITY-CONTRACTOR Agreement.

This CITY-CONTRACTOR Agreement, together with the other documents enumerated in this Article, constitute the entire Agreement between the CITY and the CONTRACTOR.

ARTICLE 5. **ALTERNATES.** The following Alternates have been accepted and their costs are included in the Contract Price stated in Article 3 of this Agreement:

Alternates: N/A

ARTICLE 6. **APPLICABLE STATUTES.** All applicable federal, state and local laws and regulations are incorporated herein by reference and the Contractor agrees to comply with same.

IN WITNESS WHEREOF, the parties have caused this instrument to be executed under seal the day and year first above written.

CONTRACTOR

By_____
Title_____

Date_____

Affix Corporate Seal Here

City funds in the amount of $_____
are available in account number
311401A-586017

I further certify that the Mayor is authorized to execute contracts and approve change orders

By_____
Comptroller of Accounts

Date _____

CITY OF NEWTON

By_____
Chief Procurement Officer

Date_____

By_____
Commissioner of Public Works

Date_____

Approved as to Legal Form and Character

By_____
Associate City Solicitor

Date_____

CONTRACT AND BONDS APPROVED

By_____
David B. Cohen, *Mayor*

Date_____

CERTIFICATE OF AUTHORITY - CORPORATE

1. **I hereby certify that I am the Clerk/Secretary of _____**

(insert full name of Corporation)

2. corporation, and that _____

(insert the name of officer who signed the **contract and bonds**.)

3. is the duly elected _____

(insert the title of the officer in line 2)

4. of said corporation, and that on _____

(insert a date that is ***ON OR BEFORE*** the date the officer signed the **contract and bonds**.)

at a duly authorized meeting of the Board of Directors of said corporation, at which all the directors were present or waived notice, it was voted that

5. _____ the _____

(insert **name** from line 2) (insert **title** from line 3)

of this corporation be and hereby is authorized to execute contracts and bonds in the name and on behalf of said corporation, and affix its Corporate Seal thereto, and such execution of any contract of obligation in this corporation's name and on its behalf, with or without the Corporate Seal, shall be valid and binding upon this corporation; and that the above vote has not been amended or rescinded and remains in full force and effect as of the date set forth below.

6. ATTEST: _____ *AFFIX CORPORATE SEAL HERE*

(Signature of **Clerk or Secretary**)*

7. Name: _____

(Please print or type name in line 6)*

8. Date: _____

(insert a date that is ***ON OR AFTER*** the date the officer signed the **contract and bonds**.)

* The name and signature inserted in lines 6 & 7 **must** be that of the **Clerk or Secretary** of the corporation.

ATTESTATION

Pursuant to MG c. 62C, § 49A, the undersigned acting on behalf of the Contractor, certifies under the penalties of perjury that, to the best of the undersign's knowledge and belief, the Contractor is in compliance with all laws of the Commonwealth relating to taxes, reporting of employees and contractors, and withholding and remitting child support.*

_____
**Signature of Individual
or Corporate Contractor (Mandatory)

_____
*** Contractor's Social Security Number
(Voluntary) or Federal Identification Number

By: _____
Corporate Officer
(Mandatory, if applicable)

Date: _____

* The provision in the Attestation relating to child support applies only when the Contractor is an individual.

** Approval of a contract or other agreement will not be granted unless the applicant signs this certification clause.

*** Your social security number will be furnished to the Massachusetts Department of Revenue to determine whether you have met tax filing or tax payment obligations. Providers who fail to correct their non-filing or delinquency will not have a contract or other agreement issued, renewed, or extended. This request is made under the authority of GL c. 62C, § 49A.

CITY OF NEWTON, MASSACHUSETTS

PERFORMANCE BOND

Know All Men By These Presents:

That we,_____, as PRINCIPAL, and _____, as SURETY, are held and firmly bound unto the City of Newton as Obligee, in the sum of _____ dollars ($_____) to be paid to the Obligee, for which payments well and truly to be made, we bind ourselves, our respective heirs, executors, administrators, successors and assigns, jointly and severally, firmly by these presents.

Whereas, the said PRINCIPAL has made a contract with the Obligee, bearing the date of _____, 20_____, for the construction of _____ in Newton, Massachusetts.
(Project Title)

Now, the condition of this obligation is such that if the PRINCIPAL and all Sub-contractors under said contract shall well and truly keep and perform all the undertakings, covenants, agreements, terms and conditions of said contract on its part to be kept and performed during the original term of said contract and any extensions thereof that may be granted by the Obligee, with or without notice to the SURETY, and during the life and any guarantee required under the contract, and shall also well and truly keep and perform all the undertakings, covenants, agreements, terms and conditions of any and all duly authorized modifications, alterations, changes or additions to said contract that may hereafter be made, notice to the SURETY of such modifications, alterations, changes or additions being hereby waived, then this obligation shall become null and void; otherwise, it shall remain in full force, virtue and effect.

In the event, that the contract is abandoned by the PRINCIPAL, or in the event that the Obligee terminates the employment of the PRINCIPAL or the authority of the PRINCIPAL to continue the work said SURETY hereby further agrees that said SURETY shall, if requested in writing by the Obligee, take such action as is necessary to complete said contract.

In Witness Whereof, the PRINCIPAL and SURETY have hereto set their hands and seals this _____day of ,20_____.

PRINCIPAL	SURETY
_____	_____
BY_____ (SEAL)	BY_____ ATTORNEY-IN-FACT) (SEAL)
_____ (Title)	
ATTEST: _____	ATTEST: _____

CITY OF NEWTON, MASSACHUSETTS

PAYMENT BOND

Know All Men By These Presents:

That we,_____, as PRINCIPAL, and _____, as SURETY, are held and firmly bound unto the City of Newton as Obligee, in the sum of _____ dollars ($_____) to be paid to the Obligee, for which payments well and truly to be made, we bind ourselves, our respective heirs, executors, administrators, successors and assigns, jointly and severally, firmly by these presents.

Whereas, the said PRINCIPAL has made a contract with the Obligee, bearing the date of _____, 20_____, for the construction of _____ in Newton, Massachusetts.
(Project Title)

Now, the conditions of this obligation are such that if the PRINCIPAL and all Sub-contractors under said contract shall pay for all labor performed or furnished and for all materials used or employed in said contract and in any and all duly authorized modifications, alterations, extensions of time, changes or additions to said contract that may hereafter be made, notice to the SURETY of such modifications, alterations, extensions of time, changes or additions being hereby waived, the foregoing to include any other purposes or items set out in, and to be subject to, provisions of M.G.L. c. 30, sec. 39A, and M.G.L. c. 149 sec. 29, as amended, then this obligation shall become null and void; otherwise it shall remain in full force, virtue and effect.

In Witness Whereof, the PRINCIPAL and SURETY have hereto set their hands and seals this _____day of ,20____.

PRINCIPAL	SURETY
_____	_____
BY_____ (SEAL)	BY_____ (ATTORNEY-IN-FACT) (SEAL)
_____ (Title)	
ATTEST: _____	ATTEST: _____

CITY OF NEWTON

GENERAL CONDITIONS OF THE CONTRACT

FOR PUBLIC WORKS CONSTRUCTION

ARTICLE 1

(DELETED)

ARTICLE 2

Definitions

The word "Commissioner" shall mean the official duly authorized to act for the City of Newton in the execution of the work of this contract, acting directly or through properly authorized agents.

The word "Engineer," or "City Engineer," shall mean the City Engineer of the City of Newton, acting directly or through properly authorized agents, such agents acting within the scope of the particular duties entrusted to them.

The word "Contractor" shall mean the party or parties contracting to perform the work covered by this contract or his, or their, legal representatives, successors or assigns.

The word "Plan" shall mean plans referred to and included in the Project Manual for this contract. The word "City" shall mean the City of Newton.

ARTICLE 3
Plans, Drawings, Profiles

1. The work shall be done in accordance with plans referred to in Article 1 and such further working and detail plans, drawings and profiles as may be furnished from time to time by the Engineer. All said plans, general and detail, are to be deemed a part of this contract, and the said plans, specifications and contract are to be considered together, so that any work mentioned in the contract, though not shown on the plans, and any work shown on the plans though not mentioned in the contract, is to be executed by the Contractor as a part of this contract. Figured dimensions are to prevail over scale. All things which in the opinion of the Engineer may fairly be inferred from the contract, plans and specifications, are to be executed by the Contractor as a part of the contract; and the Engineer shall be sole judge as to whether detail plans, drawings and profiles conform to the general plans and the contract.

Discrepancy in Plans

2. The Contractor shall carefully examine all said plans, profiles, drawings, specifications and orders; all figures, dimensions, lines, marks and scales thereof, and all directions of the Commissioner and the Engineer relating to the work, and conform to those in relation to which there is no doubt or discrepancy, but at once submit all cases of doubt or discrepancy to the Engineer for adjustment. Anything done on any part of the work for which special information or drawing should be procured, unless done in accordance with such information or drawing, or anything done in relation to which there is doubt or discrepancy, except in accordance with the adjustment thereof, or done in violation of law or public authority, is to be redone if the Commissioner shall so direct.

ARTICLE 4
Inspection

1. The Contractor in carrying on the contract shall conform to all determinations and directions of the Engineer relating to the proper interpretation of the plans, specifications, profiles or drawings, the fitness of persons employed on the work or the number thereof, or the suitableness, amount, quality, and value of anything done or any materials used, and the Contractor shall permit the Commissioner and the Engineer and persons designated by them to enter upon the work and inspect the same at all times and in all places, and shall provide safe and convenient facilities for making such entry and inspection.

ARTICLE 5
Change in Plans and Work

1. The City, acting through the Commissioner and upon his written order only, from time to time given to the Contractor or his foreman, may change, increase or take away any part of the work, or change the specifications, plans, drawings, form or materials thereof. Any deduction or addition thereto is to be allowed, or paid for at a price to be determined, within not more than 15 days of the completion of the change, by the City Engineer acting in the same capacity as an architect in a building contract as between owner and contractor. Any demand for addition or deduction must be made in writing to the City Engineer within seven (7) days of the time change was ordered.

ARTICLE 6
Time and Manner of Doing the work - Beginning and Completion

1. The Contractor shall begin work upon receipt of written Notice to Proceed. Once begun the work shall be carried out in a continuous and uninterrupted fashion with sufficient workforce and resources to assure completion by the date for completion established by the Contract Documents.

2. The Contractor shall carry on the work in accordance with the requirements of law and of all other public authorities, and to the satisfaction of the Commissioner; he shall give all notices, take out all permits, pay all charges and fees, give personal supervision to the work and keep thereon a competent foreman and sufficient employees, skilled in the several parts which are given them to do.

Maintenance of Travel

3. The Contractor shall conduct his work so as to interfere as little as possible with public travel, and shall give property owners proper means of access to their property where existing access has been cut off by the work. The Contractor shall keep the streets open for through travel except where, in the opinion of the Commissioner, it is necessary to close the street. The continuous length of the street occupied for the work shall be kept as short as possible, and no part of the work shall be unnecessarily delayed. Wherever the Commissioner shall direct, trenches shall be bridged by the Contractor in a proper and secure manner so as not to interrupt travel. Free access shall be maintained at all times to all water gates, gas gates, and fire hydrants.

Abandonment of Work by Contractor

4. In the event the City Engineer certifies to the Commissioner that the work is not being so carried forward or if the Contractor at any time is not carrying on the work to the satisfaction of the Commissioner, or is not observing any of the provisions of the contract, or has abandoned the work, or become insolvent or assigned his property, the City, acting by the Commissioner and at his discretion, may, with or without notice to the Contractor, or advertising for doing the work, and by contract, day labor or otherwise, do any part of the work which the Contractor has failed to do or replace any part not done to the satisfaction of the Commissioner, or take possession of the work and complete the same, and in doing so may use any implements, machinery or materials on or about the work which are the property of the Contractor, charging the Contractor any excess cost for completing the work, which excess cost the Contractor agrees to pay.

ARTICLE 6A
Liquidated Damages

1. In case the work embraced in the contract shall not have been completed by the date stipulated therein, the Contractor shall pay to the City of Newton as liquidated damages a designated sum per calendar day for the entire period of overrun in accordance with the following Schedule of Deductions, and in addition, the Contractor shall pay without reimbursement the entire cost of all traffic officers, railroad flagmen, inspectors, or other personnel the City Engineer and/or the Chief Engineer of the railroad determines to be necessary during the period of overrun of time.

SCHEDULE OF DEDUCTIONS

Original Contract Amount		Daily Charge
From More Than	To and Including	Per Calendar Day
$ 0.	$25,000.	$30.
25,000.	50,000.	50.
50,000.	100,000	100.
500,000.	1,000,000.	150.
1,000,000.	2,000,000.	200.
2,000,000.	___	500.

2. Whatever sum of money may become due and payable to the City of Newton by the Contractor under this Article may be retained out of money belonging to the Contractor in the hands and possession of the City of Newton. It is agreed that this Article shall be construed and treated by the parties to the contract not as imposing a penalty upon said Contractor for failing fully to complete said work as agreed on or before the time specified in the proposal, but as liquidated damages to compensate said City of Newton for all additional costs incurred by it because of the failure of the Contractor fully to complete said work on or before the date of completion specified in the proposal.

ARTICLE 6B

Delays and Extensions of Time

1. If the Contractor is delayed at any time in the progress of the work by an act or neglect of the City, or by changes in the work ordered by the City, or by unseasonably inclement weather, or by other causes deemed by the City Engineer to be beyond the Contractor's control, and which the City Engineer determines may justify delay, then the time for completion may be extended for such reasonable time as the City Engineer may determine.

2. No such extension of time will be allowed unless the Contractor submits a written request for an extension to the City Engineer no later than 10 calendar days of the start of the occurrence or event giving rise thereto. Each such request must describe the occurrence or event and specify the manner and extent that such occurrence or event is causing or has caused a delay in the work. The City Engineer shall promptly investigate each request and make his written determination to the Commissioner and the Contractor within 10 days after receipt of the request. In his determination the City Engineer may either grant, deny, or modify the length of the requested extension.

3. If the City Engineer's determination so warrants, the Commissioner shall authorize a written Change Order to the Contract extending the time for completion. No extension of time shall be deemed as granted until said Change Order has been duly executed by the parties.

4. Change Orders which may be executed by the City and the Contractor in connection with additions, extra labor and/or extra materials shall not be considered as allowing extensions of the time for completion unless the change order expressly specifies that additional time is allowed in connection with the work under the change order. Once a Change Order has been executed by the parties, any request by the Contractor for an extension of time based solely on the fact that additions, extra labor and/or extra materials are required by the Change Order will be denied by the City Engineer.

5. Permitting the Contractor to continue and finish the work or any part of it after the times fixed for its completion, or after the date to which the time for completion may have been extended, shall in no way operate as a waiver on the part of the City of Newton of any of its rights under the contract. The Contractor remains liable for damages caused other than by delay.

ARTICLE 7
Lines and Grades

1. The Contractor shall retain a Registered Land Surveyor who shall furnish such boards and stakes and cause to be placed thereon, such lines, marks and directions relating to the work as the Commissioner or City Engineer shall from time to time direct.

ARTICLE 8
Public Service Pipes and Conduits

1. The Contractor shall maintain such pipes or conduits of public service corporations or of the City as are across or within the lines of the work until such time as said public service corporations or the City assume the maintenance or removal of said pipes or conduits. The Commissioner will notify such public service corporations to that effect on the existence of such obstructions to the work being brought to his notice by the Contractor. The City will relocate either temporarily or permanently all water mains and water service pipes, or hydrants, and drains or sewers which may interfere with the work contemplated in this contract. (This clause is not to be construed as applying to such pipes as may be readily supported and protected during the progress of the work.) The cost of shutting off and turning on water in water mains during blasting shall be assumed by the City.

Protection of Existing Structures

2. All existing gas pipes, water pipes, sewers, drains, conduits, or other structures which are uncovered by the excavation shall be carefully supported and protected from injury by the Contractor, and, in case of injury, they shall be restored by him, without compensation therefor, to as good condition as that in which they were found, and shall be kept in repair until 6 months after the completion of the work. The Contractor shall provide suitable temporary channels for water at all water courses. Wherever the work passes under or adjacent to street railway tracks, the Contractor shall make all necessary arrangements with the railway company for doing any work which may affect the property of the company or interfere with the operating of the railway, and he shall be liable for any damage that may be caused by any act, omission or neglect on his part, and shall pay all expenses of every kind incidental to this work.

Changing the Location of Existing Structures

3. Whenever it becomes necessary to change the location of any water or gas pipes, sewers, drains, conduits or other structures not otherwise provided for in these specifications, the Contractor shall do the whole or such portions of the work of making such changes as the Commissioner may require, and shall receive in payment therefor the reasonable cost of the work done as determined by the Commissioner plus 15 per cent of such cost. In estimating such cost, no allowance shall be made to the Contractor for the use of tools not especially provided for this work, for general superintendence, or for any overhead expenses except liability insurance.

ARTICLE 9
Co-operation with Other Contractors

1. The Contractor shall conduct the work in such manner as not to interfere with other work being done by the City, by contract or otherwise, and if deemed necessary by the Commissioner, the work under this contract shall conform to the progress of said other work; shall co-operate with other contractors or employees who may be doing work for the City, and with public service corporations affected by the work, in arranging for storage places, connections, bracings, temporary support for structures, repairs, etc.

ARTICLE 10
Subcontracts

1. The Contractor, in any contract with a Subcontractor, shall provide that the Subcontractor shall be subject to all specifications, terms, provisions, conditions, requirements and liabilities set forth in this contract so far as such specifications, terms, provisions, conditions, requirements and liabilities are applicable to the work to be done under such Subcontract, and shall also provide that such Subcontract shall be terminated by the Contractor whenever the Commissioner shall certify to him in writing that in his opinion the work of the Subcontractor is unnecessarily or unreasonably delayed or that the Subcontractor has violated any of the provisions of this contract. The Contractor shall at once terminate such subcontract if the Commissioner, after certifying as aforesaid, shall in writing direct the Contractor to make such termination.

2. Subcontracts shall be made in writing and the Contractor shall furnish the Commissioner with a copy of his subcontracts on demand.

3. Pursuant to the provisions of M.G.L. Ch. 30, Sec. 39F (1), the following provisions are included in the General Conditions:

(a) Forthwith after the general contractor receives payment on account of a periodic estimate, the general contractor shall pay to each subcontractor the amount paid for the labor performed and the materials furnished by that subcontractor, less any amount specified in any court proceedings barring such payment and also less any amount claimed due from the subcontractor by the general contractor.

(b) Not later than the sixty-fifth day after each subcontractor substantially completes his work in accordance with the plans and specifications, the entire balance due under the subcontract less amounts retained by the awarding authority as the estimated cost of completing the incomplete and unsatisfactory items of work, shall be due the subcontractor; and the awarding authority shall pay that amount to the general contractor. The general contractor shall forthwith pay to the subcontractor the full amount received from the awarding authority less any amount specified in any court proceedings barring the payment and also less any amount claimed due from the subcontractor by the general contractor.

(c) Each payment made by the awarding authority to the general contractor pursuant to subparagraphs (a) and (b) of this paragraph for the labor performed and the materials furnished by a subcontractor shall be made to the general contractor for the account of the subcontractor; and the awarding authority shall take reasonable steps to compel the general contractor to make each such payment to each such subcontractor. If the awarding authority has received a demand for direct payment from a subcontractor for any amount which has already been included in a payment to the general contractor or which is to be included

in a payment to the general contractor for payment to the subcontractor as provided in subparagraphs (a) and (b), the awarding authority shall act upon the demand as provided in this section.

(d) If, within seventy days after the subcontractor has substantially completed the subcontract work, the subcontractor has not received from the general contractor the balance due under the subcontract including any amount due for extra labor and materials furnished to the general contractor, less any amount retained by the awarding authority, the demand shall be by a sworn statement delivered to or sent by certified mail to the awarding authority, and a copy shall be delivered to or sent by certified mail to the general contractor at the same time. The demand shall contain a detailed breakdown of the balance due under the subcontract and also a statement of the status of the completion of the subcontract work shall be valid even if delivered or mailed prior to the seventieth day after which the subcontractor has substantially completed the subcontract work. Within ten days after the subcontractor has delivered or so mailed the demand to the awarding authority and delivered or so mailed a copy to the general contractor, the general contractor may reply to the demand. The reply shall be by a sworn statement delivered to or sent by certified mail to the awarding authority and a copy shall be delivered to or sent by certified mail to the subcontractor at the same time. The reply shall contain a detailed breakdown of the balance due under the subcontract including any amount due for extra labor and materials furnished to the general contractor and of the amount due for each claim made by the general contractor against the subcontractor.

(e) Within fifteen days after receipt of the demand by the awarding authority, but in no event prior to the seventieth day after substantial completion of the subcontract work, the awarding authority shall make direct payment to the subcontractor of the balance due under the subcontract including any amount due for extra labor and materials furnished to the general contractor, less any amount (i) retained by the awarding authority as the estimated cost of completing the incomplete or unsatisfactory items of work (ii) specified in any court proceedings barring such payment, or, (iii) if the reply shall not deduct from a direct payment any amount as provided in part (iii) if the reply is not sworn to, or for which the sworn reply does not contain the detailed breakdown required by subparagraph (d). The awarding authority shall make further direct payments to the subcontractor forthwith after the removal of the basis for deductions from direct payments made as provided in parts (i) and (ii) of this subparagraph.

(f) The awarding authority shall forthwith deposit the amount deducted from a direct payment as provided in part (iii) of subparagraph (e) in an interest-bearing joint account in the names of the general contractor and the subcontractor in a bank in Massachusetts selected by the awarding authority or agreed upon by the general contractor and the subcontractor and shall notify the general contractor and the subcontractor of the date of the deposit and the bank receiving the deposit. The bank shall pay the amount in the account, including accrued interest, as provided in an agreement between the general contractor and the subcontractor or as determined by decree of a court of competent jurisdiction.

(g) All direct payments and all deductions from demands for direct payments deposited in an interest-bearing account or accounts in a bank pursuant to subparagraph (f) shall be made out of amounts payable to the general contractor at the time of receipt of a demand for direct payment from a subcontractor and out of amounts which later become payable to the general contractor and in the order of receipt of such demands from subcontractors. All direct payments shall discharge the obligation of the awarding authority to the general contractor to the extent of such payment.

(h) The awarding authority shall deduct from payments to a general contractor amounts which, together with deposits in interest-bearing accounts pursuant to subparagraph (f), are sufficient to satisfy all unpaid balances of demands for direct payment received from subcontractors. All such amounts shall be earmarked for such direct payments, and the subcontractors shall have a right in such deductions prior to any claims against such amounts by creditors of the general contractor.

ARTICLE 11
Compensation for Work

1. Subject to any provisions in Paragraph 7, the price named in the proposal and accepted by the City shall be paid by the City and received by the Contractor as full compensation for furnishing materials and for use of tools, forms, machinery and other implements, and for labor in moving materials and executing all the work contemplated in this contract, also for loss or damage arising from delay however occasioned, or out of the nature of the work aforesaid or from the action of the elements, from floods, or from any unforeseen obstructions or difficulties which may be encountered in the prosecution of the same and for all risks of every description connected with the work and for well and faithfully completing the work in the proper manner and according to the plans and specifications and requirements of the Commissioner under them.

2. During the first week of each calendar month, the City Engineer shall cause all work done by the Contractor during the previous month to be measured and shall estimate the value thereof and, on or before the 10th of each month issue a certificate to the Commissioner of the measurements and the amount due the Contractor according to the terms of his contract.

3. The City shall pay the Contractor on approval of the Commissioner monthly on or before the 18th of each month for all work done during the preceding month according to the aforementioned certificate of the City Engineer, less 5 per cent of the amount of such work and less any amounts due the City by the Contractor.

4. Within ten days after the completion of the work as determined by the Commissioner, the City Engineer shall issue to the Commissioner a final certificate of the total amount of work done and the money due the Contractor therefor, crediting thereon the amounts of the previous payments. In making the final certificate, the City Engineer shall not be bound by any preceding certificate or estimate of the amount of work done or materials furnished.

Final Payment--Claims Against Contractor

5. At the expiration of 65 days after the completion of the work as determined by the Commissioner, the City shall, unless claims are made or notice of liability against the City is given, pay the Contractor, on the approval of the Commissioner, the percentages retained and the balance due the Contractor according to the aforementioned final certificate of the City Engineer less any indebtedness of the Contractor to the City. If a claim or claims are made, or notice of liability given, such amounts due the Contractor may be paid upon satisfaction of such claims or upon furnishing of indemnity to said City against all loss, cost, damage or expense by reason of such claims. In the event of no known claims or liens the City may, at its option, pay within 35 days.

6. The City, on making any payment after the completion of the work, shall be released from all claim or liability to the Contractor for anything done or used, or for any loss or injury sustained in carrying on the contract, or for any act, omission, neglect or mistake of the City or any person relating to or affecting the contract, except for the balance of any sum retained as aforesaid.

Extra Work

7. The Contractor shall be paid for any additions, or deductions as provided in Article 5, paragraph 1, and for extra labor done by, and for extra materials furnished by him in compliance with the written order only of the Commissioner, calling for work not similar in character to that covered by the items given in the proposal, and for which no price is set in the said written order, the direct (not including consequential) cost to the Contractor, as determined to be reasonable by the Commissioner, plus fifteen per cent of said costs as so determined in regard to labor only. For teams or trucks so furnished, no payment shall be made to the Contractor beyond the current local rate as determined by the Commissioner in each case. The direct cost of labor may include the cost of mechanics and laborers furnished and a reasonable proportion of the time of the foreman and timekeeper, but it shall in no case include any charge for the use of tools, for establishment charges or for time spent by the Contractor. The actual cost of insurance on extra pay rolls and of materials furnished for extra work, shall be paid without any addition. The labor and materials so ordered shall constitute a part of the work to be done under the contract; and all and singular the provisions of the contract shall apply to said labor and materials as if the same were specified therein. The Contractor shall have no claim for the above mentioned extra labor and materials unless he furnishes the details and bills therefor within one week after doing any such labor or furnishing any such materials.

8. No claim of the Contractor against the City under this contract shall be deemed valid unless such claim is presented to the Commissioner within ten days from the time when the Contractor first knows of, or has opportunity to know of, the acts and circumstances on which such claim is based.

9. A payment or payments to the Contractor, in cases where these provisions or any of them, are not complied with, shall not be construed as a waiver of said provisions or any part thereof.

Contract Made Subject to Appropriations

10. This contract is made subject to appropriation heretofore made and shall not be altered unless the Contractor, the sureties on the bond, if any, the officer making the contract and the Mayor shall in writing agree thereto.

ARTICLE 12
Responsibility for Work--Contractor's Responsibility

1. The Contractor has made his proposal from his own examinations and estimates, and shall not hold the City, its agents, or employees, responsible for or bound by, any schedule, estimate, sounding, boring, or any plan of any part of the work; shall, if any error in any plan, drawing, specification or direction relating to anything to be done under the contract come to his knowledge, report it at once to the Commissioner; shall not, except as the Commissioner shall authorize in writing, assign or sublet any part of the contract except for the supply of materials and plant, or of anything to be done thereunder; shall, subject to the provisions of the contract take all responsibility of, and bear all losses resulting to him in carrying on the contract, and shall assume the defense of, and hold the City, its agents and employees harmless from all suits and claims against them, or any of

them, arising from the use of any invention, patent or patent right, material, labor or implement, by or from any act or omission or neglect of the Contractor, his Subcontractor, his agents or employees, in carrying on the contract, or for any liability of any nature arising under the contract. The Contractor shall be solely responsible and liable for, and shall fully protect and indemnify the City against all claims for damages to persons or property occasioned by or resulting from blasting or other methods or processes in the work of construction, whether such damages be attributable to negligence of the Contractor, his employees or his Subcontractor or otherwise.

ARTICLE 13
LIGHTS--GUARDS

1. The Contractor shall assume all responsibilities of the work and take all proper precautions to protect persons and property from injury and unnecessary interference; leave a reasonably unobstructed way along public and private places for pedestrians, teams, and vehicles, and for access to hydrants; provide proper walks over or around any obstruction made in a public or private place in carrying on the contract, and maintain from the beginning of twilight through the whole of every night, on or near the obstruction sufficient lights and guards to protect travelers from injury thereby, and if, after one notification from the Commissioner that said lights and guards are not sufficient, the Contractor has not placed additional lights and guards to the satisfaction of the Commissioner, the Commissioner shall have the right to take charge of that part of the work at the expense of the Contractor. While the work is suspended he shall keep all roadways and sidewalks in proper condition, and when the work is completed put the place and vicinity in proper condition and so leave them.

The Contractor shall provide proper means of access to property where the existing access is cut off by the Contractor and replace or put in good condition every conduit, catch-basin, tree, wall, fence, or other thing injured by the Contractor in carrying on the contract, unless the same has been permanently done away with, on approval of the Commissioner, as being necessary to the proper carrying on of the contract.

ARTICLE 14
Guaranty

1. Any settlement or other defect, or the failure of any part of the structure or the work due to defective materials or workmanship, that occurs within one year after the work is completed, is to be immediately repaired by the Contractor. In the event of any such settlement, defect, or failure causing liability to the City for damage to persons or property, the Contractor does by this clause agree to hold the City harmless and to assume the defense of any claims therefor.

2. Responsibility under this guaranty for the adequacy of the work does not relieve the Contractor of his obligation to comply with the terms of the contract and to conform to all the requirements of the plans and specifications, nor does it give him the right to deviate in any way from the details of design of the structure or the work.

ARTICLE 15
Defective Work and Materials

1. The inspection of the work shall not relieve the Contractor of any of his obligations to fulfill his contract as herein described, and defective work shall be made good and unsuitable materials may be rejected, notwithstanding that such work and materials have been previously overlooked by the Engineer and accepted or estimated for payment. If the work or materials, or any part thereof shall be found defective at any time before the final acceptance of the whole work, the Contractor shall forthwith make good such defect in a manner satisfactory to the Engineer, and if any material brought upon the ground for use in the work or selected for the same, shall be condemned by the Engineer as unsuitable or not in conformity with the specifications, the Contractor shall forthwith remove such materials from the vicinity of the work. Nothing in this contract shall be construed as vesting in the Contractor any right of property in the materials used after they have been attached or affixed to the work or the soil, but all materials shall, upon being so attached or affixed, become the property of the City of Newton.

ARTICLE 16
Employment of Labor

1. The Contractor shall give preference in employment, first to citizens of Massachusetts, second, to other citizens of the United States; and shall allow all employees on said work to lodge, board and trade where they choose, and shall not obstruct any other person in doing work for the City; and shall conform to all labor laws of the Commonwealth; and no laborer or teamster, workman or mechanic working within this Commonwealth in the employ of the Contractor or Subcontractor or other person doing or contracting to do the whole or a part of the work contemplated by the Contractor shall be requested to, or required to, or work more than eight hours in any one calendar day. This contract is subject to all the laws of the Commonwealth, and ordinances of the City and if any clause thereof does not conform to such laws and ordinances, such clause shall be void and such laws and ordinances operated in lieu thereof.

ARTICLE 17
Laws and Regulations--Contractor to Comply with Law

1. The Contractor shall keep fully informed of all existing or future acts of the legislature, and of all municipal ordinances, prohibitions, rules and regulations in any manner affecting the conduct of the work, and of all orders or decrees of any body or tribunal having any jurisdiction or authority over the materials, times, places and actions of those employed in the work embraced in the contract. The Contractor shall at all times observe and comply with all existing and future acts, ordinances, prohibitions, rules, regulations, orders and decrees; and shall protect and indemnify the city and its employees against any and all claims arising from or based on any violation of such acts, ordinances, prohibitions, rules, regulations, orders or decrees, and against all violations of law by the Contractor or his agents or employees.

END OF SECTION

CITY OF NEWTON

MINORITY/ WOMEN BUSINESS ENTERPRISE PLAN

DECEMBER 1, 1999

STATEMENT OF POLICY:

Whereas it is the policy of the government of the United States of America, the Commonwealth of Massachusetts and the City of Newton that no person shall be discriminated against in any manner whatsoever on the grounds of race, religion, color, sex, handicap or national origin; and

Whereas, it is the policy of the government of the United States of America that no person shall, on the grounds of race, color, sex or national origin, be excluded from participation in, be denied the benefits of, or be subjected to discrimination under any program of activity funded entirely or in pail by the City, the State or Federal government; and

Whereas, it is the policy of the government of the United States of America to encourage that Minority/Women Business Enterprises shall have the maximum practicable opportunity to participate in Federal and State assisted projects; and all City funded contracts; and

Whereas, it is the policy of the City of Newton to encourage that minority/women business enterprises shall have the maximum practicable opportunity to participate in all City funded contracts; and

Whereas, the City of Newton, as a recipient of Federal and State funds subscribes to the above policies and will fully comply With Federal, State and local laws and directives governing non-discrimination, equal opportunity and affirmative action in all municipal activities; and

Whereas, to further enunciate the equal opportunity policy of the City of Newton's Minority/Women Business Program, the following responsibilities are specified

> This MINORITY/ WOMEN Business Enterprise Plan sets forth the administrative standards for the further implementation of the City of Newton's policy of the utilization of minority contractors and subcontractors.
>
> The City of Newton strongly affirms that it will not discriminate in any contractual procedures against any persons because of race, color, religion, age, disability, sex or national origin. This policy shall be administered with a positive supportive attitude.
>
> It is the responsibility of the City of Newton to take affirmative steps to implement this policy to insure equality of opportunity in conducting the Program including notifying those persons and businesses doing business with the City, that contracts for goods, services and construction, shall be made Without reference or regard to race, color, sex, age, handicap, religion or national origin.

David B. Cohen Mayor

CITY OF NEWTON
MINORITY/ WOMEN BUSINESS ENTERPRISE PLAN

DECEMBER 1, 1999

I. DEFINITIONS:

A. Minority Person- the term includes a person who is of Black Hispanic, Asian, American Indian or Cape Verdean origin.

B. Minority Business Enterprise (MBE) -- the term shall mean a business a) that is certified by SOMWBA; or b) 1 provides evidence satisfactory to the City's Affirmative Action Officer that it is a business owned or controlled by one or more of the following:

- an individual who is a minority person,
- a partnership or joint venture controlled by minority persons in which at least 51 % of the ownership interest is held by minority persons or,
- a corporation or other entity controlled by minority persons and in which at least 51% of the stock is owned by one or more minority persons.

C. Contract Compliance Officer - the Chief Procurement Officer or his/her designee responsible for the implementation of Newton's Minority/Women Enterprise Plan ("MWBE Plan") and activities.

D. MCAD - Massachusetts Commission Against Discrimination.

E. SOMWBA -- State Office of Minority/Women Business Assistance,

F. City - The City of Newton.

G. Women Business Enterprise (WBE) - the term shall mean a business a) that is certified by SOMWBA; or b) provides evidence satisfactory to the City's Affirmative Action Officer that it is a business owned or controlled by one or more of the following:

- an individual who is a woman.
- a partnership or joint venture controlled by women in which at least 51% of the ownership interest is held by women, or
- a corporation or other entity controlled by women and in which at least 51% of the stock is owned by one or more women.

H. MWBE – Minority or Women Business Enterprise

II. GOALS:

Newton's Minority/Women Enterprise Plan ("MWBE Plan") shall be guided by the goals presented below to promote minority/women opportunities within the City.
These goals comprise the framework for those activities to be implemented as part of the MWBE Plan:

To take affirmative action in expanding opportunities for minority and women owned firms in obtaining contracts within the City of Newton.

To assure that all contractors, regardless of race color, religion, creed, national origin, sex, age, ancestry or handicap, shall have equal opportunity to City contracting activities.

To award, of the total annual City contract dollars expended, 10 percent to MBE and 5 percent to WBE for construction; for goods and services, 5 percent WBE and 5 percent MBE.

III. SOLICITATION ACTIVITIES:

To notify MWBEs of upcoming contracts for construction, professional services and supplies, funded in whole or in part with Federal, State, and City funds, the following activities will be undertaken. In addition on a regular basis, the City of Newton will distribute to its listing of MWBEs and SOMWBA, a summary of upcoming contract opportunities which are subject to the City's MWBE Plan.

A. Construction Contracts

All construction contracts with an estimated value over $50,000 will be formally advertised within local, regional, minority and special interest publications at least 14 days prior to the bid opening date.

For all such construction contracts a "Notice of Solicitation" of a project going out to bid will be distributed to appropriate SOMWBA or City certified firms at least 14 days prior to the bid opening date.

B. Contracts for Professional Services

The City of Newton will send notification of its advertised Request for Proposals to appropriate! SOMWBA or City certified firms Responding MWBE firms will be considered for contract award within the bounds of generally accepted management practice or with the applicable procurement law relating to securing the lowest cost and best services available.

C. Procurement of Supplies

The City of Newton will (where feasible) utilize MWBEs for the procurement of supplies in accordance with City purchasing procedures. These efforts will be documented and reported to MCAD, and the Mayor's office on a quarterly basis.

IV. CONSTRUCTION ACTIVITIES:

A. Goals

The City of Newton bid documents and contracts with an estimated value over $50,000 will contain the City's goal of 10% for MBE and 5% for 'WBE utilization for subcontracts,

B. Pre-Bid Conference

To affirmatively further the opportunities available to prospective bidders, the City will hold a pre-bid conference 5-7 days prior to the bid opening date for all City construction contracts and subcontracts with an estimated value over $50,000.

The pre-bid conference will provide an opportunity for contractors to: review and clarify the technical requirements of the projects, review the City's MWBE Plan; and review Equal Opportunity requirements. The City will advertise this conference and extend invitations to interested contractors as part of the notice of solicitation.

C. Bid Submission

All bids for City of Newton contracts with -an estimated value over $50,000 shall include a certification of intent to be completed by the bidder swing his/her intent to comply with the City's MWBE Plan. Failure to include this certification shall be an informality which may be waived if such certification is received prior to the award of the contract.

D. Contract Execution

Upon notification of award of the contract, the bidder shall provide a written plan detailing how it will comply with the MWBE Plan

E. Monitoring

Throughout the duration of the contract, the City of Newton through its Contract Compliance Officer, will monitor the progress and activities of all contractors and subcontractors as they attempt to comply with the MWBE Plan.

F. Enforcement

In the case of clear neglect to make a good faith effort to comply with this MWBE Plan, the City of Newton reserves the right to designate contractor, after a hearing, as ineligible for future City bid awards.

V. CONTRACT COMPLIANCE OFFICER/DUTIES AND RESPONSIBILITIES:

The Contract Compliance Officer, as liaison between minority firms and the City of Newton will have the overall responsibility for the implementation of Newton's MWBE Plan. This responsibility includes the development, management, dissemination of information; the provision of technical assistance to minority firms including clarification of procedures to be implemented; maintenance of relevant documentation; completion of reporting requirements; and performance of monitoring and evaluation activities; and maintenance and updating of listings of minority/women business.

The Contract Compliance Officer has oversight of all City procurements for construction, professional services and supplies and shall coordinate the implementation of the MWBE Plan with other City departments.

THE CITY OF NEWTON, MASSACHUSETTS
SUPPLEMENTAL EQUAL EMPLOYMENT OPPORTUNITY
ANTI-DISCRIMINATION AND AFFIRMATIVE ACTION PROGRAM

I. The requirements hereinafter set forth apply to construction contracts which involve an expenditure by the City of $50,000 or more.

II. For purposes of this contract "minority" refers to Asian Americans, Black, Hispanics American Indians and Cape Verdeans. The City refers to the- City of Newton

III. During the performance of this contract the Contractor and all of (his) Subcontractors (hereinafter collectively referred to as the Contractor) , for himself, his assignees, and successors ,in interest, agree as follows:

1. In connection with the performance of work under this contract, the Contractor shall not discriminate against any employee or applicant for employment because of race, color, religious creed, national origin, age or sex. The aforesaid provision shall include, but not be limited to, the following: layoff; termination; rates of pay or other forms of compensation; conditions or privileges of employment; and the selection of apprenticeship. The Contractor shall post hereafter in conspicuous places, available for employees and applicants for employment, notices to be provided by the City setting forth the provisions of the Fair Employment Practices Law of the Commonwealth (MGL Chapter 151B) . (See Attachment A)

2. In connection with the performance of work under this contract, the Contractor shall undertake in good faith, affirmative action measures designed to eliminate any discriminatory barriers in the terms and conditions of employment on the grounds of race, color, religious creed, national origin, age or sex, and to eliminate and remedy any effects of such discrimination -.in the past. Such affirmative action shall. entail positive and aggressive measures to ensure equal employment: opportunity in the areas of hiring, upgrading, demotion or transfer, recruitment, 'Layoff or termination, rate of compensation, and in-service or apprenticeship training programs. This affirmative action shall. include all action required to guarantee equal employment opportunity for all persons, regardless of race, color, religious creed, national origin, age or sex. A 'purpose of- this provision is to ensure to the fullest extent possible an adequate supply of skilled tradesmen for this and future City public construction projects

IV.

1. As part of this obligation of remedial action under the foregoing section, the contractor shall maintain on this project a not less than 5 percent ratio of minority employee man hours to total man hours in each job category, including, but not limited to, bricklayers, carpenters, cement masons, electricians, ironworkers, operating engineers, and those "classes of work" enumerated in Section 44C of Chapter 149 of the Massachusetts General Laws.

2. In the hiring of minority journeymen, apprentices, trainees and advanced trainees, the Contractor shall rely on referrals, from the Contractor's affirmative action program approved by the City, traditional referral methods utilized by the construction industry, and referrals from agencies, not more than three in number at any one Time, designated by the Liaison Committee or the City.

V.

1. At the discretion of the City, there may be established for the life of this contract a body to be known as the Liaison Committee, The Liaison Committee shall be composed of the Compliance Officer and one representative each from the Departments administering this project, hereinafter called the administering Departments, and such other representatives as may be designated by the City.

2. The Contractor (or, his/her agent, if any, designated by him/her as the onsite equal employment opportunity officer) shall recognize the Liaison Committee as the affirmative action body, and shall establish a continuing working relationship with the Liaison Committee on all matters related to minority recruitment, referral, employment and training.
3. The Contractor shall prepare manning tables on a quarterly basis.* These shall be broken down into projections, by week, for workers required in each trade. Copies shall be furnished one week in advance of the initiation of work and quarterly thereafter to the City and to the Liaison Committee.

4. Records of employment referral orders, prepared by the Contractor, shall be made available to the City and to the Liaison Committee on request.

5. The contractor shall prepare weekly reports in a form approved by the City of hours worked in each trade by each employee, identified as minority or non-minority. Copies of these reports shall be provided at the end of each week to the City and to the Liaison Committee.

* If job is less than three months, prepare for length of job.

VI. If the Contractor shall use any sub contractor on any work performed under this contract, he/she shall Lake affirmative action to negotiate with qualified minority subcontractors. This affirmative action shall cover both pre-bid and post-bid periods. It shall include notification to the State Office of: Minority *Business Assistance* or As designee, while bids are in preparation, of all products, work or services for which the Contractor intends to negotiate bids.

VII. In the employment of journeyman, apprentices, trainees, and advanced trainees, the Contractor shall give preference to citizens of the Commonwealth who have served in the armed forces of the United States in time of war and have been honorably discharged therefrom or released from active duty therein, and who are qualified to perform the work to which the employment relates, and, secondly to citizens of the Commonwealth generally, and, if such cannot be obtained in sufficient numbers, then to citizens of the United States

VIII. A designee of the City and a designee of the Liaison Committee shall each have the right of access no the Construction site,

IX. **Compliance with Requirements**

The Contractor shall comply with the provisions of Chapter 151B of the Massachusetts General Laws, which are herein incorporated by reference and made as amended by Executive Order 227, and of Chapter 151B as amended, of the Massachusetts General Laws, both *of which* are herein incorporated by reference and made a part of this contract.

X. **Non-Discrimination**

The Contractor, in the performance of all work after award, and prior to completion of the contract work, will not discriminate on the grounds of race, color, religious creed, national origin, age or sex in employment practices, in the selection or retention of sub-contractors, or in the procurement of materials and rentals of equipment.

XI. **Solicitations for sub-Contracts and for the Procurement of Materials and Equipment**

In all solicitations either by competitive bidding or negotiation made by the Contractor either for work to be performed under a subcontract or for the procurement of materials or equipment, each potential subcontractor or supplier shall be notified in writing by the Contractor of the Contractor's obligations under his contract relative to non-discrimination and affirmative action.

XII. **Bidders Certification Requirement**

1. The following certification statement will be inserted in the bid document just above the bidder's signature.

"The bidder hereby certifies he shall comply with tile minority manpower ratio and specific action steps contained in the City of Newton, Massachusetts Supplemental Equal Employment-- Opportunity Anti-Discrimination and Affirmative Action Program. The Contractor receiving the award of the contract shall be required to obtain from each of its subcontractors and submit to the contracting or, administering agency prior to the performance of any work under said contract a certification by said subcontractor, regardless of tier, that it will comply with the minority manpower ratio and specific affirmative action steps contained in the City of Newton Massachusetts Supplemental Equal Employment Opportunity Anti -Discrimination and Affirmative Action Program.

XIII. **Contractor's Certification**

A Contractor's' certification form must be signed by all successful low bidders prior to award by the City. A Contractor shall not be eligible for award of a contract unless the contractor has executed and submitted the Contractor's Certification, which shall be deemed a part of the resulting contract. (See Attachment B)

XIV. **Subcontractor's Certification**

Prior to the award of any subcontract, regardless of tier, the prospective subcontractor must execute and submit: to the Prime Contractor a subcontractor's certification setting forth the subcontractor's compliance with this program, which shall be deemed a part of the resulting subcontract. (See Attachment C)

XV. **Compliance - Information, Reports and Sanctions**

1. The Contractor will provide all information and reports Required by the administering department or, the City on instruction issued by either of them and will permit access to its facilities and any books, records, accounts and other sources of information which may be determined by the City to affect the employment of personnel. This provision shall apply only to information pertinent to the City's supplementary affirmative action contract requirements. Where information required is in the exclusive possession of another who fails or refuses to furnish this information, the Contractor shall so certify to the administering department or the City as appropriate and shall set forth what efforts he/she has made to obtain the information.

2. Whenever the administering department, the City, or the Liaison Committee believes the General Contractor or any Subcontractor may not-, be operating in compliance with the terms of this Section, the City directly, or through its designated agent, shall conduct: an appropriate investigation, and may confer with the parties, to determine if such Contractor is operating in compliance with the terms of this Section. If the City or its agent finds the General Contractor or any Subcontractor not in compliance, it shall make a preliminary report on non-compliance, and notify such Contractor in writing of such steps as will in the judgement of the City or its agent bring such Contractor into compliance. In the event. that such Contractor fails or refuses to fully perform such steps, the City shall make a final report of non-compliance, and recommend to the administering department the imposition of one or more of the sanctions listed below. If, however, the City believes the General Contractor or any Subcontractor has taken or is taking every possible measure to achieve compliance, it shall not make a final report of non-compliance. within fourteen days at the receipt of the recommendations of the City, the administering department shall move to impose one or more of the following sanctions, as it may deem appropriate to attain full and effective enforcement:

   (a) The recovery by the administering department from the General Contractor of 1/100 of 11 of the contract award price or $1000 whichever sum is greater, in the nature of liquidated damages or if a Subcontractor is in non-compliance, the recovery by the administering department from the General Contractor, to be assessed by the General Contractor as a back charge against the Subcontractor, of 1/10 of 1% of the sub-contract price, or $400 whichever sum is greater, in the nature of liquidated damages, for each week that such party fails or refuses to comply

   (b) The suspension of any payment of part thereof due under the contract until such time as the General Contractor or any Subcontractor is able to demonstrate his compliance with the terms of the contract;

   (c) The termination, or cancellation, of the contract, in whole or in part, unless the General Contractor or any Subcontractor is able to demonstrate within a specified time his/her compliance with the terms of the City's affirmative action construction contract requirements; OR,

   (d) The denial to the General Contractor or any Subcontractor of the right to participate in any future contracts awarded by the administering department for a period of up to three years.

3. If at any time after the imposition of one or more of the above sanctions (unless the contract. has been terminated), a Contractor is able to demonstrate that he/she is in compliance with this section, he/she may request the City to suspend the sanctions conditionally pending a final determination by the City as to whether the Contractor is in compliance. Upon final determination of the City, the administrating department, based upon the recommendation of the City, shall either lift the sanctions or continue them.

4. Sanctions enumerated under Section XV shall not: be imposed by the City except after the General Contractor or Subcontractor have had an opportunity for full and fair hearing with City. The non-compliance investigation shall be initiated without prior notice to the contractor. Any sanctions to be imposed shall be, set forth fully and completely in writing, and may then be appealed to the City in writing by the Contractor.

.XIV. **Severability**

The provisions of this section are severable, and if any of these provisions shall be held unconstitutional by any court of competent jurisdiction, the decision of such court. shall not, affect or impair any of the remaining provisions.

FAIR EMPLOYMENT LAW

The Fair Employment Law declares that it is illegal to discriminate on the basis of race, color, religious creed, national origin, sex, sexual orientation, age, ancestry or disability

IT IS UNLAWFUL:

- to print or circulate any advertisement or use any application form which directly or indirectly specifies any limitation on the basis of race, color, religious creed, national origin, sex, sexual orientation, age, ancestry or disability.

- to discharge or refuse to hire arty individual on file basis of their race, color, religious creed, national origin, sex, sexual orientation, age, ancestry, or disability.

- to discriminate against any individual in matters relating to compensation, terms, conditions, or privileges of employment because of their race, color, religious creed, national origin, sex, sexual orientation, age, ancestry or disability.

- to require a woman to leave her job at some arbitrary stage in her pregnancy or to refuse to let her return to work until a specified time set by the employer.

- to grant a female employee at least eight weeks leave for purposes of childbirth or to treat her absence differently than any other absence due to disability.
- to require an employee to remain at work during any day or part thereof that s/he observes as a religious holiday provided that the employee gives a ten-day notice and the absence does not cause undue hardship to the employer.

- to discharge or refuse to hire any person because of their failure to furnish information concerning admission to a center for the treatment of mentally ill persons.

- to discriminate against a job applicant for failure to furnish information, written or oral, concerning.- A) an arrest, detention or disposition regarding a violation of law in which no conviction resulted; B) a first conviction for any of the following misdemeanors: driving under the influence, simple assault, speeding, minor traffic violations, disturbance of the peace; or C) conviction for a misdemeanor where the date of the conviction or end of period of incarceration, if any, occurred more than five years prior to the employment application, and the applicant has not been convicted of any offense within the five years immediately before the date of application.

RETALIATION

It is illegal to retaliate against any person because s/he has opposed any practices forbidden under this Chapter or because s/he has filed a complaint, testified, or assisted in any proceeding before the Commission. It is also illegal to aid, abet, incite, compel or coerce the doings of any of the acts forbidden under this Chapter or to attempt to do so.

SEXUAL HARASSMENT

151B:1,18 The term "sexual harassment" shall mean sexual advances, requests for sexual favors, and other verbal or physical conduct of a sexual nature when (a) submission to or rejection of such advances, requests or conduct is made either explicitly or implicitly a term or condition of employment, or as a basis for employment decisions: (h) such advances,, requests or conduct have the purpose or effect of unreasonably interfering with an individual's work performance by creating an intimidating, hostile, humiliating or sexually offensive work environment.

COMPLAINTS

All complaints must be filed in writing. Information on the filing of complaints can be obtained by contacting the MASSACHUSETTS COMMISSION AGAINST DISCRIMINATION at the following locations:

Boston office:
One Ashburton Place
Room 601
Boston, MA 02108
(617) 727-3990

Springfield office:
436 Dwight Street
Suite 315
Springfield, MA 01103
(4 13) 739-2145

THE MASSACHUSETTS COMMIISSION AGAINST DISCRIMINATION

Attachment B

CITY OF NEWTON

Contractors Certification

A Contractor will not be eligible for award of a contract, unless such contractor has submitted the following certification, which is deemed a part of the resulting contract.

CONTRACTOR'S CERTIFICATION

_____Certifies that:
Contractor's Name

1. it tends to use the following listed construction trades in the work under the contract _____ and

2. will comply with the minority manpower ration and specific affirmative action steps contained herein; and

3. will obtain from each of its subcontractors and submit to the contracting or administering agency prior to the award of any subcontract under this contract the subcontractor certification required by these bid conditions

_____
(Signature of authorized representative of Contractor)

Any contract for the provision of goods or services to the City of Newton or any of its departments is subject to the ordinance creating the Human Rights Commission, as it may be amended from Time to Time. Any complaints within the purview shall be forwarded immediately to the contracting agency, and a copy shall be sent to the Human Rights Commission; any complaints received by the contracting agency shall be forwarded to the contractor, and a copy shall be sent to the Human Rights Commission.

Attachment C

CITY OF NEWTON

Subcontractors Certification

Prior to the award of any subcontract, regardless of tier, the prospective subcontractor must execute and submit to the Prime Contractor the following certification, which will be deemed a part of the resulting subcontractor.

SUBCONTRACTQR`S CERTIFICATION

_____Certifies that:
Contractor's Name

1. it tends to use the following listed construction trades in the work under the contract _____ and

2. will comply with the minority manpower ration and specific affirmative action steps contained herein; and

3. will obtain from each of its subcontractors and submit to the contracting or administering agency prior to the award of any subcontract under this contract the subcontractor certification required by these bid conditions

Pursuant to M.G.L. Ch. 62C, Sec. 49A, I certify under the penalties of perjury that, to the best of my knowledge and belief, I am in compliance with all laws of the Commonwealth relating to taxes, reporting of employees and contractors, and withholding and remitting child support.

_____
(Signature of authorized representative of Contractor)

In order to ensure that the said subcontractor's certification becomes part of all subcontracts under the prime contract, no subcontract shall be executed until an authorized representative of the Administrative Agency administering this project has determined in writing, that the said certification has been incorporated in such subcontract, regardless of tier, Any subcontract executed without such written approval shall be void.

Any contract for the provision of goods or services to the City of Newton or any of its departments is subject to the ordinance creating the Human Rights Commission, as it may be amended from Time to Time. Any complaints within the purview shall be forwarded immediately to the contracting agency, and a copy shall be sent to the Human Rights Commission; any complaints received by the contracting agency shall be forwarded to the contractor, and a copy shall be sent to the Human Rights Commission.

END OF SECTION

CITY OF NEWTON

WAGE RATE REQUIREMENTS

1. GENERAL

A. This section summarizes the requirements for the payment of wages to laborers and mechanics employed under the Contract.

B. Other duties and requirements of law which may not be specified in this section apply and are inherently part of the Contract.

2. WAGE RATES

A. The rate per hour to be paid to mechanics, apprentices, teamsters, chauffeurs, and laborers employed on the Work shall not be less than the rate of wages in the attached "Minimum Wage Rates" as determined by the Commissioner of Labor and Industries. The schedule of prevailing wage rates will be updated annually for all public construction projects lasting longer than one (1) year. The contractor shall pay the prevailing wage rate set out in the applicable prevailing wage rate schedule. Increases in prevailing wage rates shall not be the basis for a change order.

B. Keep posted on the site a legible copy of said schedule. Keep on file the wage rates and classifications of labor employed on this Work in order that they may be available for inspection by the Owner, Administrator, or the Architect.

C. Apprentices employed pursuant to this determination of wage rates must be registered and approved by the State Apprenticeship Council wherever rates for journeymen or apprentices are not listed.

D. Pay reserve police officers employed on the Work the prevailing rate of wages paid to regular police officers as required by M.G.L. c 149, Sec. 34B, as amended. Such police officers shall be covered by Workmen's Compensation Insurance and Employers Liability Insurance by the Contractor.

E. The Contractor and all subcontractors shall, on a weekly basis throughout the term of the contract, provide to the City of Newton certified payroll affidavits verifying compliance with M.G.L. c.149, Sec. 27, 27A and 27B.

F. The Contractor and all subcontractors shall provide a Statement of Compliance within 15 days of the completion of its portion of the work. This statement shall be submitted to the Owner on the form found elsewhere in this section.

G. The Contractor shall maintain accurate and complete records, including payroll records, during the Contract term and for three years thereafter. Filings made by the Contractor pursuant to Clauses 47, 48 and 49 of the General Conditions shall be deemed to constitute compliance with State filing requirements under the Massachusetts Prevailing Wage Law.

The Massachusetts Prevailing Wage Law
M.G.L. ch. 149, §§ 26 – 27

NOTICE TO AWARDING AUTHORITIES

- 'The enclosed wage schedule applies only to the specific project listed at the top and will be updated for any public construction project lasting longer than one (1) year.
- 'You should request an updated wage schedule from the Division of Occupational Safety if you have not opened bids or selected a contractor within 90 days of the date of issuance of the enclosed wage schedule.
- 'The wage schedule shall be incorporated in any advertisement or call for bids for the project for which it has been issued.
- 'Once a contractor has been selected by the awarding authority, the wage schedule shall be made a part of the contract for that project.

NOTICE TO CONTRACTORS

- The enclosed wage schedule, and any updated schedule, must be posted in a conspicuous place at the work site during the life of the project.
- The wages listed on the enclosed wage schedule must be paid to employees on public works projects regardless of whether they are employed by the prime contractor, a filed sub-bidder, or any sub-contractor.
- The enclosed wage schedule applies to all phases of the project including the final clean-up. Contractors whose only role is to perform final clean-up must pay their employees according to this wage schedule.
- All apprentices must be registered with the Massachusetts Division of Apprentice Training in order to be paid at the reduced apprentice rates. If a worker is not registered with the Division of Apprentice Training, they must be paid the “total rate” listed on the wage schedule regardless of experience or skill level. For further information, please call (617) 727-3486 or write to the Division of Apprentice Training, 399 Washington Street, 4th Floor, Boston, MA 02108

WEEKLY PAYROLL RECORDS REPORT
& STATEMENT OF COMPLIANCE

In accordance with Massachusetts General Law c149, §27B, a true and accurate record must be kept of all persons employed on the public works project for which the enclosed rates have been provided. A Payroll Form has been printed on the reverse of this page and includes all the information required to be kept by law. Every contractor or subcontractor is required to keep these records and preserve them for a period of three years from the date of completion of the contract.

In addition, every contractor and subcontractor is required to submit a copy of their weekly payroll records to the awarding authority. This is required to be done on a weekly basis. Once collected, the awarding authority is also required to preserve those records for three years.

In addition, each such contractor, subcontractor or public body shall furnish to the Department of Labor & Workforce Development/Division of Occupational Safety within fifteen days after completion of its portion of the work a statement, executed by the contractor, subcontractor or public body who supervises the payment of wages, in the following form:

STATEMENT OF COMPLIANCE

_____, 200_____

I,_____,_____
(Name of signatory party) (Title)
do hereby state:
That I pay or supervise the payment of the persons employed by
_____ on the _____
(Contractor, subcontractor or public body) (Building or project)
and that all mechanics and apprentices, teamsters, chauffeurs and laborers employed on said project have been paid in accordance with wages determined under the provisions of sections twenty-six and twenty-seven of chapter one hundred and forty nine of the General Laws.

Signature _____

Title _____

DIVISION OF OCCUPATIONAL SAFETY, 399 WASHINGTON STREET, 5TH FL., BOSTON, MA. 02108

THE COMMONWEALTH OF MASSACHUSETTS
EXECUTIVE OFFICE OF LABOR AND WORKFORCE DEVELOPMENT
DIVISION OF OCCUPATIONAL SAFETY

DEVAL L. PATRICK
Governor
TIMOTHY P. MURRAY
Lt. Governor

Prevailing Wage Rates

As determined by the Commissioner under the provisions of the Massachusetts General Laws, Chapter 149, Sections 26 to 27H

GEORGE NOEL
Director
LAURA M. MARLIN
Commissioner

Awarding Authority: CITY OF NEWTON
Contract Number: 0977 **City/Town:** NEWTON
Description Of Work: SOUTH HIGH SCHOOL ATHLETIC FIELD RENOVATIONS
Job Location: 140 BRANDIES ROAD

Classification	Effective Dates and Total Rates							
(2 AXLE) DRIVER - EQUIPMENT	12/1/2008	$42.260						
(3 AXLE) DRIVER - EQUIPMENT	12/1/2008	$42.330						
(4 & 5 AXLE) DRIVER - EQUIPMENT	12/1/2008	$42.450						
ADS/SUBMERSIBLE PILOT	8/1/2008	$97.960	8/1/2009	$102.480	8/1/2010	$107.410	8/1/2011	$113.190
AIRTRACK OPERATOR	12/1/2008	$45.850	6/1/2009	$46.850	12/1/2009	$47.850	6/1/2010	$48.850
	12/1/2010	$50.100	6/1/2011	$51.100	12/1/2011	$52.350		
ASBESTOS REMOVER - PIPE/MECH. EQUIPT.	12/1/2008	$37.750	6/1/2009	$39.250	12/1/2009	$40.250		
ASPHALT RAKER	12/1/2008	$45.350	6/1/2009	$46.350	12/1/2009	$47.350	6/1/2010	$48.350
	12/1/2010	$49.600	6/1/2011	$50.600	12/1/2011	$51.850		
ASPHALT/CONCRETE/CRUSHER PLANT-ON SITE	12/1/2008	$56.340	6/1/2009	$57.450	12/1/2009	$58.570	6/1/2010	$59.820
	12/1/2010	$61.070						
BACKHOE/FRONT-END LOADER	12/1/2008	$56.340	6/1/2009	$57.450	12/1/2009	$58.570	6/1/2010	$59.820
	12/1/2010	$61.070						
BARCO-TYPE JUMPING TAMPER	12/1/2008	$45.350	6/1/2009	$46.350	12/1/2009	$47.350	6/1/2010	$48.350
	12/1/2010	$49.600	6/1/2011	$50.600	12/1/2011	$51.850		
BLOCK PAVER, RAMMER / CURB SETTER	12/1/2008	$45.850	6/1/2009	$46.850	12/1/2009	$47.850	6/1/2010	$48.850
	12/1/2010	$50.100	6/1/2011	$51.100	12/1/2011	$52.350		
BOILERMAKER	10/1/2008	$54.800						
BRICK/STONE/ARTIFICIAL MASONRY (INCL. MASONRY WATERPROOFING)	2/1/2009	$65.320	8/1/2009	$67.120	2/1/2010	$68.010	8/1/2010	$69.910
	2/1/2011	$70.900	8/1/2011	$73.000	2/1/2012	$73.990		
BULLDOZER/GRADER/SCRAPER	12/1/2008	$56.020	6/1/2009	$57.130	12/1/2009	$58.230	6/1/2010	$59.470
	12/1/2010	$60.720						
CAISSON & UNDERPINNING BOTTOM MAN	12/1/2008	$46.250	6/1/2009	$47.250	12/1/2009	$48.250	6/1/2010	$49.250
	12/1/2010	$50.500	6/1/2011	$51.500	12/1/2011	$52.750		
CAISSON & UNDERPINNING LABORER	12/1/2008	$45.100	6/1/2009	$46.100	12/1/2009	$47.100	6/1/2010	$48.100
	12/1/2010	$49.350	6/1/2011	$50.350	12/1/2011	$51.600		
CAISSON & UNDERPINNING TOP MAN	12/1/2008	$45.100	6/1/2009	$46.100	12/1/2009	$47.100	6/1/2010	$48.100
	12/1/2010	$49.350	6/1/2011	$50.350	12/1/2011	$51.600		
CARBIDE CORE DRILL OPERATOR	12/1/2008	$45.350	6/1/2009	$46.350	12/1/2009	$47.350	6/1/2010	$48.350
	12/1/2010	$49.600	6/1/2011	$50.600	6/1/2012	$51.850		
CARPENTER	3/1/2009	$52.770						
CEMENT MASONRY/PLASTERING	2/1/2009	$64.110	8/1/2009	$65.510	2/1/2010	$66.200	8/1/2010	$67.670
	2/1/2011	$68.440	8/1/2011	$70.060	2/1/2012	$70.830		
CHAIN SAW OPERATOR	12/1/2008	$45.350	6/1/2009	$46.350	12/1/2009	$47.350	6/1/2010	$48.350
	12/1/2010	$49.600	6/1/2011	$50.600	12/1/2011	$51.850		
CLAM SHELLS/SLURRY BUCKETS/HEADING MACHINES	12/1/2008	$56.340	6/1/2009	$57.450	12/1/2009	$58.570	6/1/2010	$59.820
	12/1/2010	$61.070						
COMPRESSOR OPERATOR	12/1/2008	$46.290	6/1/2009	$47.110	12/1/2009	$47.930	6/1/2010	$48.850
	12/1/2010	$49.780						
DELEADER (BRIDGE)	1/1/2009	$61.210	7/1/2009	$62.360	1/1/2010	$63.510		

This wage schedule must be posted at the work site in accordance with M.G.L. ch. 149, sec. 27

Failure of the employer to pay "prevailing wage rates," which are the minimum wage rates listed above, on public works projects is a violation of M.G.L. ch. 149, sec. 27B. Employees not receiving such rates should report the violation to the Office of Fair Labor and Business Practices, 100 Cambridge Street, Boston, MA 02108; Tel: 617-727-3465.

Issue Date: 3/18/2009 **Rate Sheet:** NEWTON **Job ID:** 127090 **Page:** 1

THE COMMONWEALTH OF MASSACHUSETTS
EXECUTIVE OFFICE OF LABOR AND WORKFORCE DEVELOPMENT
DIVISION OF OCCUPATIONAL SAFETY

DEVAL L. PATRICK
Governor
TIMOTHY P. MURRAY
Lt. Governor

GEORGE NOEL
Director
LAURA M. MARLIN
Commissioner

Prevailing Wage Rates

As determined by the Commissioner under the provisions of the Massachusetts General Laws, Chapter 149, Sections 26 to 27H

Awarding Authority: CITY OF NEWTON
Contract Number: 0977 **City/Town:** NEWTON
Description Of Work: SOUTH HIGH SCHOOL ATHLETIC FIELD RENOVATIONS
Job Location: 140 BRANDIES ROAD

Classification	Effective Dates and Total Rates							
DEMO: AD ZEMAN	12/1/2008	$45.100	6/1/2009	$46.100	12/1/2009	$47.100	6/1/2010	$48.100
	12/1/2010	$49.350	6/1/2011	$50.350	12/1/2011	$51.600		
DEMO: BACKHOE/LOADER/HAMMER OPERATOR	12/1/2008	$46.100	6/1/2009	$47.100	12/1/2009	$48.100	6/1/2010	$49.100
	12/1/2010	$50.350	6/1/2011	$51.350	12/1/2011	$52.600		
DEMO: BURNERS	12/1/2008	$45.850	6/1/2009	$46.850	12/1/2009	$47.850	6/1/2010	$48.850
	12/1/2010	$50.100	6/1/2011	$51.100	12/1/2011	$52.350		
DEMO: CONCRETE CUTTER/SAWYER	12/1/2008	$46.100	6/1/2009	$47.100	12/1/2009	$48.100	6/1/2010	$49.100
	12/1/2010	$50.350	6/1/2011	$51.350	12/1/2011	$52.600		
DEMO: JACKHAMMER OPERATOR	12/1/2008	$45.850	6/1/2009	$46.850	12/1/2009	$47.850	6/1/2010	$48.850
	12/1/2010	$50.100	6/1/2011	$51.100	12/1/2011	$52.350		
DEMO: WRECKING LABORER	12/1/2008	$45.100	6/1/2009	$46.100	12/1/2009	$47.100	6/1/2010	$48.100
	12/1/2010	$49.350	6/1/2011	$50.350	12/1/2011	$51.600		
DIRECTIONAL DRILL MACHINE OPERATOR	12/1/2008	$56.020	6/1/2009	$57.130	12/1/2009	$58.230	6/1/2010	$59.470
	12/1/2010	$60.720						
DIVER	8/1/2008	$72.590	8/1/2009	$75.600	8/1/2010	$78.890	8/1/2011	$82.740
DIVER TENDER	8/1/2008	$58.090	8/1/2009	$60.240	8/1/2010	$62.590	8/1/2011	$65.340
DIVER TENDER (EFFLUENT)	8/1/2008	$76.210	8/1/2009	$79.440	8/1/2010	$82.960	8/1/2011	$87.090
DIVER/SLURRY (EFFLUENT)	8/1/2008	$97.960	8/1/2009	$102.480	8/1/2010	$107.410	8/1/2011	$113.190
ELECTRICIAN	3/1/2009	$63.550	9/1/2009	$64.780	3/1/2010	$66.020	9/1/2010	$67.260
	3/1/2011	$68.490						
ELEVATOR CONSTRUCTOR	1/1/2009	$63.690	1/1/2010	$65.190	1/1/2011	$66.690	1/1/2012	$68.190
ELEVATOR CONSTRUCTOR HELPER	1/1/2009	$49.830	1/1/2010	$51.330	1/1/2011	$52.830	1/1/2012	$54.330
FENCE & GUARD RAIL ERECTOR	12/1/2008	$45.350	6/1/2009	$46.350	12/1/2009	$47.350	6/1/2010	$48.350
	12/1/2010	$49.600	6/1/2011	$50.600	12/1/2011	$51.850		
FIELD ENG. - INST. PERSON (BLDG, SITE, HVY CONST)	11/1/2008	$53.870	5/1/2009	$54.830	11/1/2009	$55.940	5/1/2010	$57.040
	11/1/2010	$58.280	5/1/2011	$59.520				
FIELD ENG. - ROD PERSON (BLDG, SITE, HVY CONST)	11/1/2008	$39.740	5/1/2009	$40.310	11/1/2009	$40.960	5/1/2010	$41.610
	11/1/2010	$42.340	5/1/2011	$43.070				
FIELD ENG.-CHIEF OF PARTY (BLDG, SITE, HVY CONST)	11/1/2008	$55.220	5/1/2009	$56.190	11/1/2009	$57.300	5/1/2010	$58.410
	11/1/2010	$59.660	5/1/2011	$60.910				
FIRE ALARM INSTALLER	3/1/2009	$63.550	9/1/2009	$64.780	3/1/2010	$66.020	9/1/2010	$67.260
	3/1/2011	$68.490						
FIRE ALARM REPAIR / MAINTENANCE	3/1/2009	$51.620	9/1/2009	$52.540	3/1/2010	$53.470	9/1/2010	$54.410
	3/1/2011	$55.330						
FIREMAN (ASST. ENGINEER)	12/1/2008	$50.870	6/1/2009	$51.820	12/1/2009	$52.780	6/1/2010	$53.850
	12/1/2010	$54.930						
FLAGGER & SIGNALER	12/1/2008	$35.100	6/1/2009	$35.100	12/1/2009	$35.100	6/1/2010	$36.100
	12/1/2010	$36.100	6/1/2011	$37.100	12/1/2011	$37.100		
FLOORCOVERER	3/1/2009	$58.380						

This wage schedule must be posted at the work site in accordance with M.G.L. ch. 149, sec. 27

Failure of the employer to pay "prevailing wage rates," which are the minimum wage rates listed above, on public works projects is a violation of M.G.L. ch. 149, sec. 27B. Employees not receiving such rates should report the violation to the Office of Fair Labor and Business Practices, 100 Cambridge Street, Boston, MA 02108; Tel: 617-727-3465.

Issue Date: 3/18/2009 **Rate Sheet:** NEWTON **Job ID:** 127090 **Page:** 2

THE COMMONWEALTH OF MASSACHUSETTS
EXECUTIVE OFFICE OF LABOR AND WORKFORCE DEVELOPMENT
DIVISION OF OCCUPATIONAL SAFETY

DEVAL L. PATRICK
Governor
TIMOTHY P. MURRAY
Lt. Governor

Prevailing Wage Rates

As determined by the Commissioner under the provisions of the Massachusetts General Laws, Chapter 149, Sections 26 to 27H

GEORGE NOEL
Director
LAURA M. MARLIN
Commissioner

Awarding Authority: CITY OF NEWTON
Contract Number: 0977 **City/Town:** NEWTON
Description Of Work: SOUTH HIGH SCHOOL ATHLETIC FIELD RENOVATIONS
Job Location: 140 BRANDIES ROAD

Classification	Effective Dates and Total Rates							
FORK LIFT/CHERRY PICKER	12/1/2008	$56.340	6/1/2009	$57.450	12/1/2009	$58.570	6/1/2010	$59.820
	12/1/2010	$61.070						
GENERATOR/LIGHTING PLANT/HEATERS	12/1/2008	$46.290	6/1/2009	$47.110	12/1/2009	$47.930	6/1/2010	$48.850
	12/1/2010	$49.780						
GLAZIER (GLASS PLANK/AIR BARRIER/INTERIOR SYSTEMS)	1/1/2009	$50.710	7/1/2009	$51.860	1/1/2010	$53.010		
HOISTING ENGINEER/CRANES/GRADALLS	12/1/2008	$56.340	6/1/2009	$57.450	12/1/2009	$58.570	6/1/2010	$59.820
	12/1/2010	$61.070						
HVAC (DUCTWORK)	2/1/2009	$61.020	8/1/2009	$62.270	2/1/2010	$63.520		
HVAC (ELECTRICAL CONTROLS)	3/1/2009	$63.550	9/1/2009	$64.780	3/1/2010	$66.020	9/1/2010	$67.260
	3/1/2011	$68.490						
HVAC (TESTING AND BALANCING - AIR)	2/1/2009	$61.020	8/1/2009	$62.270	2/1/2010	$63.520		
HVAC (TESTING AND BALANCING -WATER)	3/1/2009	$65.980	9/1/2009	$67.480	3/1/2010	$68.730		
HVAC MECHANIC	3/1/2009	$65.980	9/1/2009	$67.480	3/1/2010	$68.730		
HYDRAULIC DRILLS	12/1/2008	$45.850	6/1/2009	$46.850	12/1/2009	$47.850	6/1/2010	$48.850
	12/1/2010	$50.100	6/1/2011	$51.100	12/1/2011	$52.350		
INSULATOR (PIPES & TANKS)	9/1/2008	$56.860	9/1/2009	$59.260	9/1/2010	$61.660		
IRONWORKER/WELDER	3/16/2009	$58.240	9/16/2009	$59.590	3/16/2010	$60.990		
JACKHAMMER & PAVING BREAKER OPERATOR	12/1/2008	$45.350	6/1/2009	$46.350	12/1/2009	$47.350	6/1/2010	$48.350
	12/1/2010	$49.600	6/1/2011	$50.600	12/1/2011	$51.850		
LABORER	12/1/2008	$45.100	6/1/2009	$46.100	12/1/2009	$47.100	6/1/2010	$48.100
	12/1/2010	$49.350	6/1/2011	$50.350	12/1/2011	$51.600		
LABORER: CARPENTER TENDER	12/1/2008	$45.100	6/1/2009	$46.100	12/1/2009	$47.100	6/1/2010	$48.100
	12/1/2010	$49.350	6/1/2011	$50.350	12/1/2011	$51.600		
LABORER: CEMENT FINISHER TENDER	12/1/2008	$45.100	6/1/2009	$46.100	12/1/2009	$47.100	6/1/2010	$48.100
	12/1/2010	$49.350	6/1/2011	$50.350	12/1/2011	$51.600		
LABORER: HAZARDOUS WASTE/ASBESTOS REMOVER	12/1/2008	$45.100	6/1/2009	$46.100	12/1/2009	$47.100	6/1/2010	$48.100
	12/1/2010	$49.350	6/1/2011	$50.350	12/1/2011	$51.600		
LABORER: MASON TENDER	12/1/2008	$45.350	6/1/2009	$46.350	12/1/2009	$47.350	6/1/2010	$48.350
	12/1/2010	$49.600	6/1/2011	$50.600	12/1/2011	$51.850		
LABORER: MULTI- TRADE TENDER	12/1/2008	$45.100	6/1/2009	$46.100	12/1/2009	$47.100	6/1/2010	$48.100
	12/1/2010	$49.350	6/1/2011	$50.350	12/1/2011	$51.600		
LABORER: TREE REMOVER	12/1/2008	$45.100	6/1/2009	$46.100	12/1/2009	$47.100	6/1/2010	$48.100
	12/1/2010	$49.350	6/1/2011	$50.350	12/1/2011	$51.600		
LASER BEAM OPERATOR	12/1/2008	$45.350	6/1/2009	$46.350	12/1/2009	$47.350	6/1/2010	$48.350
	12/1/2010	$49.600	6/1/2011	$50.600	12/1/2011	$51.850		
MARBLE & TILE FINISHERS	2/1/2009	$54.800	8/1/2009	$56.240	2/1/2010	$56.950	8/1/2010	$58.470
	2/1/2011	$59.270	8/1/2011	$60.950	2/1/2012	$61.740		
MARBLE MASONS,TILELAYERS & TERRAZZO MECH	2/1/2009	$65.360	8/1/2009	$67.160	2/1/2010	$68.050	8/1/2010	$69.950
	2/1/2011	$70.940	8/1/2011	$73.040	2/1/2012	$74.030		

This wage schedule must be posted at the work site in accordance with M.G.L. ch. 149, sec. 27

Failure of the employer to pay "prevailing wage rates," which are the minimum wage rates listed above, on public works projects is a violation of M.G.L. ch. 149, sec. 27B. Employees not receiving such rates should report the violation to the Office of Fair Labor and Business Practices, 100 Cambridge Street, Boston, MA 02108; Tel: 617-727-3465.

Issue Date: 3/18/2009 **Rate Sheet:** NEWTON **Job ID:** 127090 **Page:** 3

THE COMMONWEALTH OF MASSACHUSETTS
EXECUTIVE OFFICE OF LABOR AND WORKFORCE DEVELOPMENT
DIVISION OF OCCUPATIONAL SAFETY

DEVAL L. PATRICK
Governor
TIMOTHY P. MURRAY
Lt. Governor

Prevailing Wage Rates

As determined by the Commissioner under the provisions of the Massachusetts General Laws, Chapter 149, Sections 26 to 27H

GEORGE NOEL
Director
LAURA M. MARLIN
Commissioner

Awarding Authority: CITY OF NEWTON
Contract Number: 0977 **City/Town:** NEWTON
Description Of Work: SOUTH HIGH SCHOOL ATHLETIC FIELD RENOVATIONS
Job Location: 140 BRANDIES ROAD

Classification	Effective Dates and Total Rates							
MECH. SWEEPER OPERATOR (NON-CONSTRUCTION)	7/1/2008	$27.300	7/1/2009	$28.300	7/1/2010	$29.000	7/1/2011	$29.700
MECH. SWEEPER OPERATOR (ON CONST. SITES)	12/1/2008	$56.020	6/1/2009	$57.130	12/1/2009	$58.230	6/1/2010	$59.470
	12/1/2010	$60.720						
MECHANICS MAINTENANCE	12/1/2008	$56.020	6/1/2009	$57.130	12/1/2009	$58.230	6/1/2010	$59.470
	12/1/2010	$60.720						
MILLWRIGHT (Zone 1)	3/1/2009	$54.400						
MORTAR MIXER	12/1/2008	$45.350	6/1/2009	$46.350	12/1/2009	$47.350	6/1/2010	$48.350
	12/1/2010	$49.600	6/1/2011	$50.600	12/1/2011	$51.850		
OILER (OTHER THAN TRUCK CRANES,GRADALLS)	12/1/2008	$40.480	6/1/2009	$41.130	12/1/2009	$41.790	6/1/2010	$42.520
	12/1/2010	$43.260						
OILER (TRUCK CRANES,GRADALLS)	12/1/2008	$43.300	6/1/2009	$44.030	12/1/2009	$44.760	6/1/2010	$45.590
	12/1/2010	$46.420						
OTHER POWER DRIVEN EQUIPMENT - CLASS II	12/1/2008	$56.020	6/1/2009	$57.130	12/1/2009	$58.230	6/1/2010	$59.470
	12/1/2010	$60.720						
PAINTER (BRIDGES/TANKS)	1/1/2009	$61.210	7/1/2009	$62.360	1/1/2010	$63.510		
PAINTER (SPRAY OR SANDBLAST, NEW) *	1/1/2009	$52.110	7/1/2009	$53.260	1/1/2010	$54.410		
PAINTER (SPRAY OR SANDBLAST, REPAINT)	1/1/2009	$50.170	7/1/2009	$51.320	1/1/2010	$52.470		
PAINTER (TRAFFIC MARKINGS)	12/1/2008	$45.100	6/1/2009	$46.100	12/1/2009	$47.100	6/1/2010	$48.100
	12/1/2010	$49.350	6/1/2011	$50.350	12/1/2011	$51.600		
PAINTER / TAPER (BRUSH, NEW) *	1/1/2009	$50.710	7/1/2009	$51.860	1/1/2010	$53.010		
PAINTER / TAPER (BRUSH, REPAINT)	1/1/2009	$48.770	7/1/2009	$49.920	1/1/2010	$51.070		
PANEL & PICKUP TRUCKS DRIVER	12/1/2008	$42.090						
PIER AND DOCK CONSTRUCTOR (UNDERPINNING AND DECK)	8/1/2008	$58.090	8/1/2009	$60.240	8/1/2010	$62.590	8/1/2011	$65.340
PILE DRIVER	8/1/2008	$58.090	8/1/2009	$60.240	8/1/2010	$62.590	8/1/2011	$65.340
PIPEFITTER & STEAMFITTER	3/1/2009	$65.980	9/1/2009	$67.480	3/1/2010	$68.730		
PIPELAYER	12/1/2008	$45.350	6/1/2009	$46.350	12/1/2009	$47.350	6/1/2010	$48.350
	12/1/2010	$49.600	6/1/2011	$50.600	12/1/2011	$51.850		
PLUMBERS & GASFITTERS	3/1/2009	$65.500	9/1/2009	$67.000	3/1/2010	$68.250		
PNEUMATIC CONTROLS (TEMP.)	3/1/2009	$65.980	9/1/2009	$67.480	3/1/2010	$68.730		
PNEUMATIC DRILL/TOOL OPERATOR	12/1/2008	$45.350	6/1/2009	$46.350	12/1/2009	$47.350	6/1/2010	$48.350
	12/1/2010	$49.600	6/1/2011	$50.600	12/1/2011	$51.850		
POWDERMEN & BLASTER	12/1/2008	$46.100	6/1/2009	$47.100	12/1/2009	$48.100	6/1/2010	$49.100
	12/1/2010	$50.350	6/1/2011	$51.350	12/1/2011	$52.600		
POWER SHOVEL/DERRICK/TRENCHING MACHINE	12/1/2008	$56.340	6/1/2009	$57.450	12/1/2009	$58.570	6/1/2010	$59.820
	12/1/2010	$61.070						
PUMP OPERATOR (CONCRETE)	12/1/2008	$56.340	6/1/2009	$57.450	12/1/2009	$58.570	6/1/2010	$59.820
	12/1/2010	$61.070						
PUMP OPERATOR (DEWATERING, OTHER)	12/1/2008	$46.290	6/1/2009	$47.110	12/1/2009	$47.930	6/1/2010	$48.850
	12/1/2010	$49.780						

This wage schedule must be posted at the work site in accordance with M.G.L. ch. 149, sec. 27

Failure of the employer to pay "prevailing wage rates," which are the minimum wage rates listed above, on public works projects is a violation of M.G.L. ch. 149, sec. 27B. Employees not receiving such rates should report the violation to the Office of Fair Labor and Business Practices, 100 Cambridge Street, Boston, MA 02108; Tel: 617-727-3465.

Issue Date: 3/18/2009 **Rate Sheet:** NEWTON **Job ID:** 127090 **Page:** 4

THE COMMONWEALTH OF MASSACHUSETTS
EXECUTIVE OFFICE OF LABOR AND WORKFORCE DEVELOPMENT
DIVISION OF OCCUPATIONAL SAFETY

Prevailing Wage Rates

As determined by the Commissioner under the provisions of the Massachusetts General Laws, Chapter 149, Sections 26 to 27H

DEVAL L. PATRICK
Governor
TIMOTHY P. MURRAY
Lt. Governor

GEORGE NOEL
Director
LAURA M. MARLIN
Commissioner

Awarding Authority: CITY OF NEWTON
Contract Number: 0977 **City/Town:** NEWTON
Description Of Work: SOUTH HIGH SCHOOL ATHLETIC FIELD RENOVATIONS
Job Location: 140 BRANDIES ROAD

Classification	Effective Dates and Total Rates							
READY-MIX CONCRETE DRIVER	5/1/2008	$39.140	5/1/2009	$40.520	5/1/2010	$41.080	5/1/2011	$41.690
RECLAIMERS	12/1/2008	$56.020	6/1/2009	$57.130	12/1/2009	$58.230	6/1/2010	$59.470
	12/1/2010	$60.720						
RESIDENTIAL WOOD FRAME CARPENTER **	3/1/2009	$35.620						
RIDE-ON MOTORIZED BUGGY OPERATOR	12/1/2008	$45.350	6/1/2009	$46.350	12/1/2009	$47.350	6/1/2010	$48.350
	12/1/2010	$49.600	6/1/2011	$50.600	12/1/2011	$51.850		
ROLLER/SPREADER/MULCHING MACHINE	12/1/2008	$56.020	6/1/2009	$57.130	12/1/2009	$58.230	6/1/2010	$59.470
	12/1/2010	$60.720						
ROOFER (Inc Roofer Waterproofing & Roofer Damproofg)	2/1/2009	$53.860						
SHEETMETAL WORKER	2/1/2009	$61.020	8/1/2009	$62.270	2/1/2010	$63.520		
SIGN ERECTOR	6/1/2008	$35.520	6/1/2009	$37.780				
SLATE / TILE / PRECAST CONCRETE ROOFER	2/1/2009	$54.110						
SPECIALIZED EARTH MOVING EQUIP < 35 TONS	12/1/2008	$42.550						
SPECIALIZED EARTH MOVING EQUIP > 35 TONS	12/1/2008	$42.840						
SPRINKLER FITTER	3/16/2009	$66.950	9/16/2009	$68.450	3/16/2010	$69.700		
STEAM BOILER OPERATOR	12/1/2008	$56.020	6/1/2009	$57.130	12/1/2009	$58.230	6/1/2010	$59.470
	12/1/2010	$60.720						
TAMPERS, SELF-PROPELLED OR TRACTOR DRAWN	12/1/2008	$56.020	6/1/2009	$57.130	12/1/2009	$58.230	6/1/2010	$59.470
	12/1/2010	$60.720						
TELECOMMUNICATION TECHNICIAN	3/1/2009	$51.620	9/1/2009	$52.540	3/1/2010	$53.470	9/1/2010	$54.410
	3/1/2011	$55.330						
TERRAZZO FINISHERS	2/1/2009	$64.260	8/1/2009	$66.060	2/1/2010	$66.950	8/1/2010	$68.850
	2/1/2011	$69.840	8/1/2011	$71.940	2/1/2012	$72.930		
TEST BORING DRILLER	12/1/2008	$46.500	6/1/2009	$47.500	12/1/2009	$48.500	6/1/2010	$49.500
	12/1/2010	$50.750	6/1/2011	$51.750	12/1/2011	$53.000		
TEST BORING DRILLER HELPER	12/1/2008	$45.220	6/1/2009	$46.220	12/1/2009	$47.220	6/1/2010	$48.220
	12/1/2010	$49.470	6/1/2011	$50.470	12/1/2011	$51.720		
TEST BORING LABORER	12/1/2008	$45.100	6/1/2009	$46.100	12/1/2009	$47.100	6/1/2010	$48.100
	12/1/2010	$49.350	6/1/2011	$50.350	12/1/2011	$51.600		
TRACTORS/PORTABLE STEAM GENERATORS	12/1/2008	$56.020	6/1/2009	$57.130	12/1/2009	$58.230	6/1/2010	$59.470
	12/1/2010	$60.720						
TRAILERS FOR EARTH MOVING EQUIPMENT	12/1/2008	$43.130						
TUNNEL WORK (COMP. AIR HAZ. WASTE)	12/1/2008	$59.180	6/1/2009	$60.430	12/1/2009	$61.680	6/1/2010	$62.930
	12/1/2010	$64.180	6/1/2011	$65.430	12/1/2011	$66.680		
TUNNEL WORK (COMPRESSED AIR)	12/1/2008	$57.180	6/1/2009	$58.430	12/1/2009	$59.680	6/1/2010	$60.930
	12/1/2010	$62.180	6/1/2011	$63.430	12/1/2011	$64.680		
TUNNEL WORK (FREE AIR HAZ. WASTE)	12/1/2008	$51.250	6/1/2009	$52.500	12/1/2009	$53.750	6/1/2010	$55.000
	12/1/2010	$56.250	6/1/2011	$57.400	12/1/2011	$58.750		
TUNNEL WORK (FREE AIR)	12/1/2008	$49.250	6/1/2009	$50.500	12/1/2009	$51.750	6/1/2010	$53.000
	12/1/2010	$54.250	6/1/2011	$55.500	12/1/2011	$56.750		

This wage schedule must be posted at the work site in accordance with M.G.L. ch. 149, sec. 27

Failure of the employer to pay "prevailing wage rates," which are the minimum wage rates listed above, on public works projects is a violation of M.G.L. ch. 149, sec. 27B. Employees not receiving such rates should report the violation to the Office of Fair Labor and Business Practices, 100 Cambridge Street, Boston, MA 02108; Tel: 617-727-3465.

Issue Date: 3/18/2009 **Rate Sheet:** NEWTON **Job ID:** 127090 **Page:** 5

THE COMMONWEALTH OF MASSACHUSETTS
EXECUTIVE OFFICE OF LABOR AND WORKFORCE DEVELOPMENT
DIVISION OF OCCUPATIONAL SAFETY

DEVAL L. PATRICK
Governor
TIMOTHY P. MURRAY
Lt. Governor

Prevailing Wage Rates

As determined by the Commissioner under the provisions of the Massachusetts General Laws, Chapter 149, Sections 26 to 27H

GEORGE NOEL
Director
LAURA M. MARLIN
Commissioner

Awarding Authority: CITY OF NEWTON
Contract Number: 0977 **City/Town:** NEWTON
Description Of Work: SOUTH HIGH SCHOOL ATHLETIC FIELD RENOVATIONS
Job Location: 140 BRANDIES ROAD

Classification	Effective Dates and Total Rates							
VAC-HAUL	12/1/2008	$42.550						
WAGON DRILL OPERATOR	12/1/2008	$45.350	6/1/2009	$46.350	12/1/2009	$47.350	6/1/2010	$48.350
	12/1/2010	$49.600	6/1/2011	$50.600	12/1/2011	$51.850		
WASTE WATER PUMP OPERATOR	12/1/2008	$56.340	6/1/2009	$57.450	12/1/2009	$58.570	6/1/2010	$59.820
	12/1/2010	$61.070						
WATER METER INSTALLER	3/1/2009	$65.500	9/1/2009	$67.000	3/1/2010	$68.250		

* If 30% or more of surfaces to be painted are new construction, NEW paint rate shall be used.
** The Residential Wood Frame Carpenter classification applies only to the construction of new, wood frame residences that do not exceed four stories including the basement.

This wage schedule must be posted at the work site in accordance with M.G.L. ch. 149, sec. 27
Failure of the employer to pay "prevailing wage rates," which are the minimum wage rates listed above, on public works projects is a violation of M.G.L. ch. 149, sec. 27B. Employees not receiving such rates should report the violation to the Office of Fair Labor and Business Practices, 100 Cambridge Street, Boston, MA 02108; Tel: 617-727-3465.

Issue Date: 3/18/2009 **Rate Sheet:** NEWTON **Job ID:** 127090 **Page:** 6

COMMONWEALTH OF MASSACHUSETTS

Division of Occupational Safety

Minimum wage rates for apprentices employed on public works projects are listed below as a percentage of the pre-determined hourly wage rate established by the Commissioner under the provisions of the M.G.L. c. 149, ss. 26-27D. Apprentice ratios are established by the Division of Apprentice Training pursuant to M.G.L. c. 23, ss. 11E-11L.

All apprentices must be registered with the Division of Apprentice Training in accordance with M.G.L. c. 23, ss. 11E-11L.

City/Town: NEWTON — All steps are 6 months (1000 Hours) unless otherwise specified**

Classification	Ratio*	1	2	3	4	5	6	7	8	9	10
ASBESTOS INSULATOR (Pipes & Tanks)	1:4	50	60	70	80						
				Steps are 1 year							
BOILERMAKER	1:5	65	65	70	75	80	85	90	95		
BRICK/PLASTER/CEMENT MASON	1:5	50	60	70	80	90					
CARPENTER	1:5	50	60	70	75	80	80	90	90		
CARPENTER (Residential Wood Frame)	1:5	60	60	65	70	75	80	85	90		
ELECTRICIAN	2:3***	40	40	45	45	50	55	60	65	70	75
				App Prior 1/1/03; 30/35/40/45/50/55/65/70/75/80							
ELEVATOR CONSTRUCTOR	1:1	50	55	65	70	80					
				Steps 1-2 are 6 mos.; Steps 3-5 are 1 year							
FLOORCOVERER	1:1	50	55	60	65	70	75	80	85		
				Steps are 750 hrs.							
GLAZIER	1:1	50	55	60	65	70	75	80	90		
				Steps are 750 hrs.							
HOIST/PORT. ENG.	1:6	55	60	65	70	75	80	85	90		
IRONWORKER		60	70	75	80	85	90				
Structural 1:6; Ornamental 1:4											
LABORER	1:5	60	70	80	90						
MARBLE-TILE-TERRAZZO FINISHER	1:3	50	60	70	80	90					
				Steps are 800 hrs.							
MARBLE-TILE-TERRAZZO MECHANIC	1:3	50	60	70	80	90					
MILLWRIGHT	1:5	50	55	60	65	70	75	80	85		
PAINTER	1:1	50	55	60	65	70	75	80	90		
				Steps are 750 hrs.							
PILE DRIVER	1:3	60	65	70	75	80	85	90	95		
PIPEFITTER	**	40	45	60	70	80					
** 1:3; 3:15; 1:10 thereafter				Steps are 1 year							

* Ratios are expressed in allowable number of apprentices to journeymen or fraction thereof.
** Multiple ratios are listed in comment field.
*** The job site ratio of 2 apprentices(App) for every 3 journeymen(JM) is allowed as follows:
1 JM: 1 App; 2-3 JM:2 App; 4-6 JM: 4 App; 7- 9 JM: 6 App; 10- 12 JM: 8 App; 13-15 JM: 10 App; etc
**** The job site ratio of 2 apprentices(App) for every 3 journeymen(JM) is allowed as follows:
1-2 JM: 1 App; 3-4 JM: 2 App; 5 JM: 3 App; 6-7 JM: 4 App; 8 JM: 5 App; etc

Issue Date: 3/18/2009 **Rate Sheet:** NEWTON **Job ID:** 127090

COMMONWEALTH OF MASSACHUSETTS

Division of Occupational Safety

Minimum wage rates for apprentices employed on public works projects are listed below as a percentage of the pre-determined hourly wage rate established by the Commissioner under the provisions of the M.G.L. c. 149, ss. 26-27D. Apprentice ratios are established by the Division of Apprentice Training pursuant to M.G.L. c. 23, ss. 11E-11L.

All apprentices must be registered with the Division of Apprentice Training in accordance with M.G.L. c. 23, ss. 11E-11L.

City/Town: NEWTON — All steps are 6 months (1000 Hours) unless otherwise specified**

PLUMBER	**	35	40	55	65	75					
** 1:2; 2:6; 3:10; 4:14; 5:19				Steps are 1 year; Step 4 w/ license-70; Step 5 w/ license-80							
REFRIGERATION / AC MECHANIC	**	40	45	60	70	80					
** 1:1;1:2;2:4;3:6;4:8;5:10;6:12;7:14;8:17;9:20;10:23(				Steps are 1 year							
ROOFER	**	50	60	65	75	85					
** 1:5, 2:6 -10 thereafter 1:10 (or portion thereof)				Step 1 is 2000 hrs.; Steps 2-5 are 1000 hrs.							
ROOFER (REROOFING)	**	50	60	65	75	85					
** 1:4; Thereafter 1:1				Step 1 is 2000 hrs.; Steps 2-5 are 1000 hrs.							
SHEET METAL WORKER	1:4	40	45	50	60	65	75	85			
				Steps 1-3 are 1 year; Steps 4-7 are 6 mos.							
SIGN ERECTOR	1:1	50	55	60	65	70	75	80	85	90	
				Steps are 4 mos.							
SPRINKLER FITTER	1:1	40	45	50	55	60	65	70	75	80	85
TELECOMMUNICATION TECHNICIAN	1:1	40	45	50	55	60	65	75	80		

* Ratios are expressed in allowable number of apprentices to journeymen or fraction thereof.
** Multiple ratios are listed in comment field.
*** The job site ratio of 2 apprentices(App) for every 3 journeymen(JM) is allowed as follows:
1 JM: 1 App; 2-3 JM:2 App; 4-6 JM: 4 App; 7- 9 JM: 6 App; 10- 12 JM: 8 App; 13-15 JM: 10 App; etc
**** The job site ratio of 2 apprentices(App) for every 3 journeymen(JM) is allowed as follows:
1-2 JM: 1 App; 3-4 JM: 2 App; 5 JM: 3 App; 6-7 JM: 4 App; 8 JM: 5 App; etc

Issue Date: 3/18/2009 **Rate Sheet:** NEWTON **Job ID:** 127090

WEEKLY PAYROLL REPORT FORM

Company Name:

Project Name:

Awarding Auth.:

Work Week Ending:

Prime Contractor

Subcontractor
List Prime Contractor:

Employer Signature:

Print Name & Title:

Employee Name & Address	Work Classification	Hours Worked							(A) Tot. Hrs.	(B) Hourly Base Wage	Employer Contributions			(F) [B+C+D+E] Hourly Total Wage (prev. wage)	(G) [A*F] Weekly Total Amount
											(C) Health & Welfare	(D) Pension	(E) Supp. Unemp.		
		S	M	T	W	T	F	S							

NOTE: Every contractor and subcontractor is required to submit a copy of their weekly payroll records to the awarding authority.

City of Newton

Massachusetts 02459

Engineering Division

Phone (617) 796-1020

FAX (617) 796-1051

Permit Number _____

Date Issued _____

Expiration Date_____

Fee: $50 x _____=_____
Trenches Total

TRENCH PERMIT
Pursuant to G.L. c. 82A §1 and 520 CMR 7.00 et seq.(as amended)

THIS PERMIT MUST BE FULLY COMPLETED PRIOR TO CONSIDERATION

Name of Applicant **Street Address**			**Phone** **Cell**
City/Town	**MA**	**ZIP**	
Name of Excavator (if different from applicant) **Street Address**			**Phone** **Cell**
City/Town	**MA**	**ZIP**	
Name of Owner(s) of Property **Street Address**			**Phone** **Cell**
City/Town	**MA**	**ZIP**	
Other Contact		**Permit Fee Received No ( ) Yes ( )**	

Description, location and purpose of proposed trench:
Please describe the exact location of the proposed trench and its purpose (include a description of what is (or is intended) to be laid in proposed trench (eg; pipes/cable lines etc..) Please use reverse side if additional space is needed.

Insurance Certificate #:

Name and Contact Information of Insurer:

Policy Expiration Date:

Dig Safe #:

Name of Competent Person (as defined by 520 CMR 7.02):

Massachusetts Hoisting License # **License Grade:**	**Expiration Date:**

BY SIGNING THIS FORM, THE APPLICANT, OWNER, AND EXCAVATOR ALL ACKNOWLEDGE AND CERTIFY THAT THEY ARE FAMILIAR WITH, OR, BEFORE COMMENCEMENT OF THE WORK, WILL BECOME FAMILIAR WITH, ALL LAWS AND REGULATIONS APPLICABLE TO WORK PROPOSED, INCLUDING OSHA REGULATIONS, G.L. c. 82A, 520 CMR 7.00 et seq., AND ANY APPLICABLE MUNICIPAL ORDINANCES, BY-LAWS AND REGULATIONS AND THEY COVENANT AND AGREE THAT ALL WORK DONE UNDER THE PERMIT ISSUED FOR SUCH WORK WILL COMPLY THEREWITH IN ALL RESPECTS AND WITH THE CONDITIONS SET FORTH BELOW.

THE UNDERSIGNED OWNER AUTHORIZES THE APPLICANT TO APPLY FOR THE PERMIT AND THE EXCAVATOR TO UNDERTAKE SUCH WORK ON THE PROPERTY OF THE OWNER, AND ALSO, FOR THE DURATION OF CONSTRUCTION, AUTHORIZES PERSONS DULY APPOINTED BY THE MUNICIPALITY TO ENTER UPON THE PROPERTY TO MONITOR AND INSPECT THE WORK FOR CONFORMITY WITH THE CONDITIONS ATTACHED HERETO AND THE LAWS AND REGULATIONS GOVERNING SUCH WORK.

THE UNDERSIGNED APPLICANT, OWNER AND EXCAVATOR AGREE JOINTLY AND SEVERALLY TO REIMBURSE THE MUNICIPALITY FOR ANY AND ALL COSTS AND EXPENSES INCURRED BY THE MUNICIPALITY IN CONNECTION WITH THIS PERMIT AND THE WORK CONDUCTED THEREUNDER, INCLUDING BUT NOT LIMITED TO ENFORCING THE REQUIREMENTS OF STATE LAW AND CONDITIONS OF THIS PERMIT, INSPECTIONS MADE TO ASSURE COMPLIANCE THEREWITH, AND MEASURES TAKEN BY THE MUNICIPALITY TO PROTECT THE PUBLIC WHERE THE APPLICANT OWNER OR EXCAVATOR HAS FAILED TO COMPLY THEREWITH INCLUDING POLICE DETAILS AND OTHER REMEDIAL MEASURES DEEMED NECESSARY BY THE MUNICIPALITY.

THE UNDERSIGNED APPLICANT, OWNER AND EXCAVATOR AGREE JOINTLY AND SEVERALLY TO DEFEND, INDEMNIFY, AND HOLD HARMLESS THE MUNICIPALITY AND ALL OF ITS AGENTS AND EMPLOYEES FROM ANY AND ALL LIABILITY, CAUSES OR ACTION, COSTS, AND EXPENSES RESULTING FROM OR ARISING OUT OF ANY INJURY, DEATH, LOSS, OR DAMAGE TO ANY PERSON OR PROPERTY DURING THE WORK CONDUCTED UNDER THIS PERMIT.

APPLICANT SIGNATURE

_____ DATE _____

EXCAVATOR SIGNATURE (IF DIFFERENT)

_____ DATE _____

OWNER'S SIGNATURE (IF DIFFERENT)

_____ DATE:_____

For City/Town use -- Do not write in this section	
PERMIT APPROVED BY	**$_____ Application Fee**
PERMITTING AUTHORITY **Date**	
CONDITIONS OF APPROVAL	

CONDITIONS AND REQUIREMENTS PURSUANT TO G.L.C.82A AND 520 CMR 7.00 et seq. (as amended)

By signing the application, the applicant understands and agrees to comply with the following:

No trench may be excavated unless the requirements of sections 40 through 40D of chapter 82, and any accompanying regulations, have been met and this permit is invalid unless and until said requirements have been complied with by the excavator applying for the permit including, but not limited to, the establishment of a valid excavation number with the underground plant damage prevention system as said system is defined in section 76D of chapter 164 (DIG SAFE);

Trenches may pose a significant health and safety hazard. Pursuant to Section 1 of Chapter 82 of the General Laws, an excavator shall not leave any open trench unattended without first making every reasonable effort to eliminate any recognized safety hazard that may exist as a result of leaving said open trench unattended. Excavators should consult regulations promulgated by the Department of Public Safety in order to familiarize themselves with the recognized safety hazards associated with excavations and open trenches and the procedures required or recommended by said department in order to make every reasonable effort to eliminate said safety hazards which may include covering, barricading or otherwise protecting open trenches from accidental entry.

Persons engaging in any in any trenching operation shall familiarize themselves with the federal safety standards promulgated by the Occupational Safety and Health Administration on excavations: 29 CFR 1926.650 et.seq., entitled Subpart P "Excavations".

Excavators engaging in any trenching operation who utilize hoisting or other mechanical equipment subject to chapter 146 shall only employ individuals licensed to operate said equipment by the Department of Public Safety pursuant to said chapter and this permit must be presented to said licensed operator before any excavation is commenced;

By applying for, accepting and signing this permit, the applicant hereby attests to the following: (1) that they have read and understands the regulations promulgated by the Department of Public Safety with regard to construction related excavations and trench safety; (2) that he has read and understands the federal safety standards promulgated by the Occupational Safety and Health Administration on excavations: 29 CMR 1926.650 et.seq., entitled Subpart P "Excavations" as well as any other excavation requirements established by this municipality; and (3) that he is aware of and has, with regard to the proposed trench excavation on private property or proposed excavation of a city or town public way that forms the basis of the permit application, complied with the requirements of sections 40-40D of chapter 82A.

This permit shall be posted in plain view on the site of the trench.

Summary of Excavation and Trench Safety Regulation (520 CMR 14.00 et seq.)

This summary was prepared by the Massachusetts Department of Public Safety pursuant to G.L.c.82A and does not include all requirements of the 520 CMR 14.00. To view the full regulation and G.L.c.82A, go to www/mass.gov/dps

Pursuant to M.G.L. c. 82, § 1, the Department of Public Safety, jointly with the Division of Occupational Safety, drafted regulations relative to trench safety. The regulation is codified in section 14.00 of title 520 of the Code of Massachusetts Regulations. The regulation requires all excavators to obtain a permit prior to the excavation of a trench made for a construction-related purpose on public or private land or rights-of-way. All municipalities must establish a local permitting authority for the purpose of issuing permits for trenches within their municipality. Trenches on land owned or controlled by a public (state) agency requires a permit to be issued by that public agency unless otherwise designated.

In addition to the permitting requirements mandated by statute, the trench safety regulations require that all excavators, whether public or private, take specific precautions to protect the general public and prevent unauthorized access to unattended trenches. Accordingly, unattended trenches must be covered, barricaded or backfilled. Covers must be road plates at least ¾" thick or equivalent; barricades must be fences at least 6' high with no openings greater than 4" between vertical supports; backfilling must be sufficient to eliminate the trench. Alternatively, excavators may choose to attend trenches at all times, for instance by hiring a police detail, security guard or other attendant who will be present during times when the trench will be unattended by the excavator.

The regulations further provide that local permitting authorities, the Department of Public Safety, or the Division of Occupational Safety may order an immediate shutdown of a trench in the event of a death or serious injury; the failure to obtain a permit; or the failure to implement or effectively use adequate protections for the general public. The trench shall remain shutdown until re-inspected and authorized to re-open provided, however, that excavators shall have the right to appeal an immediate shutdown. Permitting authorities are further authorized to suspend or revoke a permit following a hearing. Excavators may also be subject to administrative fines issued by the Department of Public Safety for identified violations.

For additional information please visit the Department of Public Safety's website at www.mass.gov/dps

Summary of 1926 CFR Subpart P -OSHA Excavation Standard

This is a worker protection standard, and is designed to protect employees who are working inside a trench. This summary was prepared by the Massachusetts Division of Occupational Safety and not OSHA for informational purposes only and does not constitute an official interpretation by OSHA of their regulations, and may not include all aspects of the standard.

For further information or a full copy of the standard go to www.osha.gov.

- **Trench Definition per the OSHA standard:**
  - An excavation made below the surface of the ground, narrow in relation to its length.
  - In general, the depth is greater than the width, but the width of the trench is not greater than fifteen feet.
- **Protective Systems** to prevent soil wall collapse are always required in trenches deeper than 5', and are also required in trenches less than 5' deep when the competent person determines that a hazard exists. Protection options include:
  - Shoring. Shoring must be used in accordance with the OSHA Excavation standard appendices, the equipment manufacturer's tabulated data, or designed by a registered professional engineer.
  - Shielding (Trench Boxes). Trench boxes must be used in accordance with the equipment manufacturer's tabulated data, or a registered professional engineer.
  - Sloping or Benching. In Type C soils (what is most typically encountered) the excavation must extend horizontally 1 ½ feet for every foot of trench depth on both sides, 1 foot for Type B soils, and ¾ foot for Type A soils.
  - A registered professional engineer must design protective systems for all excavations greater than 20' in depth.
- **Ladders** must be used in trenches deeper than 4'.
  - Ladders must be inside the trench with workers at all times, and located within 25' of unobstructed lateral travel for every worker in the trench.
  - Ladders must extend 3' above the top of the trench so workers can safely get onto and off of the ladder.
- **Inspections** of every trench worksite are required:
  - Prior to the start of each shift, and again when there is a change in conditions such as a rainstorm.
  - Inspections must be conducted by the competent person (see below).
- **Competent Person(s) is:**
  - Capable (i.e., trained and knowledgeable) in identifying existing and predictable hazards in the trench, and other working conditions which may pose a hazard to workers, and
  - Authorized by management to take necessary corrective action to eliminate the hazards. Employees must be removed from hazardous areas until the hazard has been corrected.
- **Underground Utilities** must be:
  - Identified prior to opening the excavation (e.g., contact Digsafe).
  - Located by safe and acceptable means while excavating.
  - Protected, supported, or removed once exposed.
- **Spoils** must be kept back a minimum of 2' from the edge of the trench.
- **Surface Encumbrances** creating a hazard must be removed or supported to safeguard employees. Keep heavy equipment and heavy material as far back from the edge of the trench as possible.
- **Stability of Adjacent Structures:**
  - Where the stability of adjacent structures is endangered by creation of the trench, they must be underpinned, braced, or otherwise supported.
  - Sidewalks, pavements, etc. shall not be undermined unless a support system or other method of protection is provided.
- **Protection from water accumulation hazards:**
  - It is not allowable for employees to work in trenches with accumulated water. If water control such as pumping is used to prevent water accumulation, this must be monitored by the competent person.
  - If the trench interrupts natural drainage of surface water, ditches, dikes or other means must be used to prevent this water from entering the excavation.
- **Additional Requirements:**
  - For mobile equipment operated near the edge of the trench, a warning system such as barricades or stop logs must be used.
  - Employees are not permitted to work underneath loads. Operators may not remain in vehicles being loaded unless vehicles are equipped with adequate protection as per 1926.601(b)(6).
  - Employees must wear high-visibility clothing in traffic work zones.
  - Air monitoring must be conducted in trenches deeper than 4' if the potential for a hazardous atmosphere exists. If a hazardous atmosphere is found to exist (e.g., O_2 <19.5% or >23.5%, 20% LEL, specific chemical hazard), adequate protections shall be taken such as ventilation of the space.
  - Walkways are required where employees must cross over the trench. Walkways with guardrails must be provided for crossing over trenches > 6' deep.
  - Employees must be protected from loose rock or soil through protections such as scaling or protective barricades.

END OF SECTION

CITY OF NEWTON
DEPARTMENT OF PUBLIC WORKS

SUMMARY OF WORK AND SPECIFIC REQUIREMENTS OF THE CONTRACT FOR PUBLIC WORKS CONSTRUCTION

I. SUMMARY OF WORK

A. The Work under the Contract consists of:

1. Construction of a new synthetic running track, which generally includes the pulverization of the existing track, demolition of the existing grand stand and press box, construction of the new synthetic track (6-lanes on the oval and 8-lanes on the straightaway), construction of a new grand stand with press box, new drainage system including a polymer trench drain, perimeter fencing, bituminous concrete walkways, long/triple jump runways and landing pits, new polevault runway, two shot put circles and landing areas, new discus pad and cage and other appurtenances as detailed in the Contract Documents.

2. Construction of a new "infilled" synthetic turf football field inside the proposed synthetic running track, including installation of subsurface drainage system, gravel base, a scoreboard and other appurtenances as detailed in the Contract Documents.

3. Construction of a new "infilled" synthetic turf multipurpose field including installation of subsurface drainage system, gravel base, concrete anchor curbing, perimeter fencing and protective netting, concrete bleacher pads for portable spectator seating, bituminous concrete walkways, a scoreboard and other appurtenances as detailed in the Contract Documents.

4. Construction of a new natural turf baseball field with a 90-ft diamond, including installation of a subsurface drainage system, irrigation system, dugout enclosures, perimeter fencing and backstop, bleacher pads, two bullpen areas, a batting tunnel, concrete bleacher pads for portable spectator seating, bituminous concrete walkways, a scoreboard and other appurtenances as detailed in the Contract Documents.

5. Construction of a new natural turf softball field with a 60-ft diamond and a multipurpose field in the outfield including the installation of subsurface drainage systems, irrigation, dugouts, perimeter fencing and backstop, concrete bleacher pads for portable spectator seating, bituminous concrete walkways and other appurtenances as detailed in the Contract Documents.

All work shall consist of furnishing any and all materials, labor, and equipment, to complete the work in accordance with the specific requirements of this Project Manual and in accordance with the specific requirements as shown on the plans prepared by Gale Associates, Inc. and entitled, Newton South High School Athletic Field Campus Renovation Project, dated March 18, 2009

1. All work described in the Project Manual and/or shown on the Plan(s) unless specifically indicated as not to be done.

B. In addition the work under the contract includes:

1. Work outside the Project Site as called for in the Project Manual and/or Plan(s) and as required for the performance of the work.

2. The restoration of any items damaged or destroyed by encroaching upon areas outside the Project Site.

3. All labor, materials, tools, and equipment necessary to do all the work required for the completion of each item as specified, which shall limited not only to the exact intent mentioned, but shall include incidental work necessary or customarily performed for the completion of that item.

4. All items not specifically mentioned or noted in the Project Manual and/or Plan(s), but which are obviously necessary to make a complete working installation.

C. The Proposed Contract Price shall be complete costs, including overhead, profit, insurance, transportation, and all other costs connected with, or incidental to the work described.

II. TIME FOR COMPLETION AND LIQUIDATED DAMAGES

A. Upon notification the Contractor shall commence the work specified in the Project Manual as directed by the City. The work shall proceed in a continuous uninterrupted fashion with adequately staffed crews, in a satisfactory manner, which will assure that the work is completed in a timely manner to the satisfaction of the City.

B. **All work associated with the synthetic turf fields shall be completed by September 1, 2009. All work associated with the natural turf fields shall be completed by October 1, 2009.**

C. Time is of the essence for the completion of this contract. If the Contractor fails to achieve substantial or final completion of the Work within the time required by the contract, and unless an extension of time is granted, the Contractor shall pay to the City as liquidated damages, the applicable amount specified in Article 6a of the General Conditions for each day of delay. If different completion dates are specified in the Contract for separate parts or stages of the work, the amount of liquidated damages shall be assessed on those parts or stages which are delayed. To the extent that the Contractor's delay or nonperformance is excused under another section in this Contract, liquidated damages shall not be due the City. The Contractor remains liable for damages caused other than by delay

III. INSURANCE REQUIREMENTS

A. The Contractor shall carry and maintain until acceptance of the work such Workmen's Compensation , Automobile Liability, Public Liability, Contingent Public Liability, Property Damage and Contingent Property Damage Insurance, each including blasting coverage, as shall protect him and any sub-contractor performing work covered by this contract from all claims and liability for damages for personal injury, including accidental death, and for property damage which may arise from operations under this contract, whether such operations be by himself or by any sub-contractor or by any one directly or indirectly employed by either of them.

B. The City shall be named as an additional insured on such policy.

C. The amounts of such insurance shall be as follows:

1. Workmen's Compensation Insurance as required by Massachusetts General Law.

2. Automobile Liability Insurance on all vehicles owned or hired for a.) Bodily Injury in an amount not less than $500,000.00 for each occurrence, and not less than $1,000,000.00 aggregate; b.) Property Damage in an amount not less than $250,000.00 each occurrence, and not less than $500,000.00 aggregate.

3. Public Liability Insurance and Contingent Public Liability Insurance in an amount not less than $500,000.00 for injuries, including accidental death to any one person, and subject to the same limit for each person, in an amount not less than $1,000,000.00 on account of one accident.

4. Property Damage Insurance and Contingent Property Damage Insurance in an amount not less than $250,000.00 on account of one accident, and in an amount of not less than $500,000.00 on account of all accidents.

5. General Liability Insurance shall include Contractual Liability Insurance.

D. Before any work is started, the successful bidder shall be required to file with the Chief Procurement Officer certificates of insurance coverage as detailed above, with policy numbers and dates of expiration.

E. The Contractor shall indemnify, hold harmless and defend the City and its departments, officers, employees, servants, and agents from and against all actions, causes of actions, claims, demands, damages, costs, loss of services, expenses and compensation, including attorney's fees and interest arising out of or resulting directly or indirectly from the services rendered pursuant to this Contract, provided that any such action, cause of action, claim, demand, damage, cost, loss of service, expense, compensation (1) in any way grows out of bodily injury, sickness, disease or death, or to injury to or destruction of tangible property, which (2) is caused in whole or in part by any act or omission of the Contractor, anyone directly or indirectly employed by any of them or anyone for whose acts any of them may be liable, regardless of whether or not it is cased in part by a party indemnified hereunder.

END OF SUMMARY

SECTION 1

ITEM 1 - EXTRA EXCAVATION TO REMOVE UNSUITABLE MATERIAL

Description

(a) When, in the opinion of the Engineer, the material encountered at the bottom of the Excavation, or as he may otherwise determine to be unstable or unfit material on which to build the structure(s), then the Contractor shall excavate to such greater depths as the Engineer may decide. Such extra excavation shall apply to all material to be excavated regardless of its nature.

Method of Construction

(b) The excavated material shall be replaced with material as specified in **Section 02300 – Earthwork.**

Method of Construction

(c) Backfilling and/or compaction requirements shall comply with the trench directives as shown on the plans, as shown in the City of Newton Construction Details, and/or as directed by the Engineer.

Method of Measurement

(d) Measurements taken for payment of extra excavation shall be by the cubic yard and shall be to such depths as approved by the Engineer and to such widths as are defined by the payment lines shown on the plans or Construction Details, or as otherwise approved by the Engineer. No payment for extra excavation beyond these limits shall be made.

Basis of Payment

(e) Under **Item 2,** the Contractor will be paid the contract unit price per cubic yard of extra excavation which unit price shall include full compensation for all labor, materials, tools, equipment and all incidental work necessary to complete the work under this item as shown on the plans, or Construction Details as directed by the Engineer and as specified herein, inclusive of all disposal and backfilling costs.

(f) The excavated material shall be replaced with material as specified in **Section 02300 – Earthwork.**

ITEM 2 – INSTALLATION OF IRRIGATION SUPPLY WELLS

Description

(a) Installation of the two (2) irrigation wells as shown on the contract plans and specification Section 02814 - Irrigation Well Installation, Development and Testing.

Method of Construction

(c) Backfilling and/or compaction requirements shall comply with the trench directives as shown on the plans, as shown in the City of Newton Construction Details, and/or as directed by the Engineer.

Method of Measurement

(d) Measurements taken for payment of additional well development requirements shall be by the units depicted on the bid form and shall be to such depths as approved by the Engineer, or as otherwise approved by the Engineer. No payment for extra work beyond these limits shall be made.

Basis of Payment

(e) Under **Item 2,** the Contractor will be paid the contract unit price as noted on the bid form for extra depth of irrigation well required to achieve water requirements which shall include full compensation for all labor, materials, tools, equipment and all incidental work necessary to complete the work under this item as shown on the plans, or Construction Details as directed by the Engineer and as specified herein, inclusive of all disposal and backfilling costs.

ITEM 3 – ALL OTHER WORK AS NOTED IN THE CONTRACT DOCUMENTS

Description

(b) Installation of two (2) synthetic turf fields, a urethane track, including field events, two (2) natural turf athletic fields, a new bleacher system with pressbox and all other site utilities and site appurtenances excluding the two (2) irrigation wells..

Method of Construction

(c) Construction shall comply with the technical specifications included as part the construction project manual.

Method of Measurement

(d) Measurements for payment will be based on percentage of completion (minus retainage) of the items as noted in an approved project schedule of values.

Basis of Payment

(e) The contractor will be paid in accordance with a project schedule of values for the project to be submitted, reviewed and approved by the project engineer and the City of Newton.

(i) **Under this contract the Contractor shall file a Trench Permit application** (pursuant to M.G.L. Chapter 82A:1 and 520 CMR 7.00 et seq. (as amended) and in accordance with the 'Summary of 1926 Subpart P-OSHA Excavation Standard), and he shall not commence with any excavation work until such time as the Trench Permit has been approved and he is fully prepared to meet the conditions of the Permit. To that end :

- The Trench Permit and related information is attached (See Attachment A)
- The City of Newton shall waive the fees associated with the issuance of the Permit.
- The Contractor shall not be required to obtain additional insurance but still must list the policy number(s) under which the contractual work is being performed.
- **The Contractor must create, continually update and continually submit a signed and dated amended form, which lists the exact location of each independent trench opening and its purpose, as the project commences. These updated lists shall be restricted to only the work being performed under this contract.**

END OF SECTION

CITY OF NEWTON

SPECIAL CONDITIONS OF THE CONTRACT

FOR PUBLIC WORKS CONSTRUCTION

The following Special Conditions supplement the City of Newton General Conditions of the Contract for Public Works Construction. The following clauses relate in particular to this contract. In the event of conflict or ambiguity between the General Conditions and these Special Conditions, the Special Conditions take precedence and shall govern.

1. The Contractor shall provide such police officers as the Engineer deems necessary for the direction and control of traffic entering, passing through and leaving the site of the contract. Such officers shall wear regulation policemen's uniforms and fluorescent safety vests. The City will reimburse the Contractor for payments made for the services of all traffic officers. The Contractor is required to submit to the Engineer copies of evidence of payment.

2. Unless otherwise specified elsewhere in this contract or specifically directed by the Engineer, all excavated material shall be wasted off-site at the Contractors' expense. No City of Newton disposal area will be available for this purpose.

3. The Contractor shall make his own arrangements with the owners of land other than the City easements occupied by or used by him in the prosecution of this contract and shall hold the City harmless from any and all claims for damages caused by or arising from such occupation or use. All temporary roadways built to accommodate equipment, trucks, etc., shall be built at the Contractor's own expense.

4. The City does not guarantee the locations of existing pipes or underground conduits. The locations of these structures shown on the plans are approximate. In private lands where sprinkler systems, driveway, walk and step heating cables and/or heating pipes are encountered, the Contractor shall use due caution when excavating in the vicinity of these structures.

5. The City does not guarantee the nature of any material encountered in any excavation. The Contractor must make his own examination, by boring, test holes, or otherwise, for determining the nature of the material to be excavated or the conditions under which the work is to be performed, and make his bid in sole reliance thereon.

6. The Contractor shall clean up the entire project before the City will accept the work. All rubbish, tree stumps, boulders from any excavation, surplus excavated material, unless specifically ordered by the Engineer to do otherwise, or any other debris shall be disposed of by the Contractor. The entire area within the easements and all other areas disturbed by the Contractor shall be graded and left in a condition comparable to that as found originally and satisfactory to the Engineer. All the work mentioned in this paragraph shall be included in the Furnishing, Trenching and Laying Item.

7. All trenches and areas resurfaced by the Contractor shall be guaranteed against settlement, upheaval or failure of any kind for a period of one (1) year after the City accepts the work and he shall replace such resurfacing at his own expense. The City Engineer shall be sole judge as to what constitutes a failure and which portion of the resurfacing is to be replaced, and his decision shall be final.

8. Before starting the work and from time to time during its progress, as the Engineer may request, the Contractor shall submit to the Engineer a written description of the methods he plans to use in doing the work and the various steps he intends to take.

9. The terms "earth excavation" and "excavation" used throughout these specifications shall include all the material to be excavated and/or removed (except rock excavation) including peat, muck, roots, trees, stumps, and all other material necessary for the completion of the work to be done as specified.

10. The term "complete in place" used throughout these specifications shall include all the work to be done for the completion of the item as specified.

11. The Contractor shall cooperate with other Contractors, Utility Companies and/or City of Newton Departments that may be working on or near the work site covered by the contract. The Engineer will decide as to the respective rights of the parties involved and his decisions shall be final.

12. The Contractor shall assume all liability, financial or otherwise, in connection with this contract and shall protect and save harmless the City of Newton for any and all damages or claims that may arise because of inconveniences, delays or loss experienced by him because of the presence and operations of other Contractors, Utility Companies and/or City of Newton Departments working near or within the limits of the contract.

13. The Contractor shall begin on receipt of written orders to do so, and the work once begun shall be continuously carried forward with a force of men adequate in the opinion of the Engineer to complete the work in a reasonable and expeditious manner, inclement and unseasonable weather conditions excepted. In the event the Engineer determines that the Contractor has not begun work on written orders to do so, or that the work once begun has been abandoned without authority, then the Engineer shall give the Contractor seventy-two (72) hours notice (Sunday excepted) to begin work, or resume work in case of abandonment. Failure of the Contractor to act within this specified time shall be deemed a breach of this contract and the Contractor shall be held liable for any damage or expense arising from such breach of contract.

14. Upon commencement of the work the Contractor shall assume full charge and care thereof and he shall take every necessary precaution against injury or damage to the work by action of the elements, or from any cause whatever, whether arising from the execution or the non-execution of the contract. The Contractor shall bear all losses resulting to him on account of the amount or character of the work or because the nature of the land in or on which the work is done is different from what was estimated or expected, or on account of the weather elements or other causes.

15. The Contractor shall rebuild, repair, restore and make good all injuries or damages to any portion of the work occasioned by any of the above causes before the completion and final acceptance of the work, and shall bear the expense thereof.

16. All notices, demands, requests, instructions, approvals and claims must be in writing. Any such notice shall be deemed to have been given as of the time of delivery, or of actual receipt in the case of telegrams or, in the case of mailing, when it should have been received in due course of post. For communicating purposes, the office address of the Contractor shall be that stated on the signature page of the contract; that of the City shall be as stated in the Notice to Contractors. Any subsequent change in address of either party shall be communicated to the other in writing.

17. The City will furnish to the Contractor, without charge, all copies of the specifications reasonably necessary in the performance of the contract work.

18. The Contractor shall supply to the City the name and telephone number of a responsible person who may be contacted during off-hour emergencies on the project. The Contractor shall cooperate at all times with the City and the Project Manager, and ensure the cooperation of his key personnel and that of his subcontractors.

19. The work must be completed in a continuous uninterrupted operation. The Contractor must use sufficient men and adequate equipment to complete all the necessary work requirements within a minimum period of time. The work shall be conducted between the hours of 7:00 a.m. and 4:30 p.m. on Monday through Friday. No work shall be done on holidays, Saturdays or Sundays other than for emergencies, or unless specifically authorized by the City.

20. The Contractor shall, with each monthly invoice submitted during the term of this Contract, submit to the City two (2) legible copies of his payrolls documenting the wages paid to all employees performing on site labor relating to the work of this Contract. These copies shall be prepared on forms supplied by the City.

21. a.) Unless specifically so stated to the contrary the use of a manufacturer's name or style number is not restrictive, and is intended solely as an identification of the type and quality of the materials and services required. In all cases, the words “or approved equal” if not inserted are implied.

    b.) An item equal to that named or described in the specifications may upon written approval of the City be furnished by the Contractor. An item shall be considered equal to the item so named or described if (1) it is at least equal in quality, durability, appearance, strength and design; (2) it will perform at least equally the function imposed by the general design for the public work being contracted for or the material being purchased; (3) it conforms substantially, even with deviations, to the detailed requirements for the item in the specifications.

    c.) The name and identification of all materials other than the one specifically named shall be submitted to the City in writing for approval, prior to purchase, use or fabrication of such items. Subject to the provisions of M.G.L. Ch. 30, Sec. 39J, approval shall be at the sole discretion of the City, shall be in writing to be effective, and the decision of the City shall be final. The City may require tests of all materials so submitted to establish quality standards at the Contractor’s expense.

d.) For the use of material other than the one specified, the Contractor shall assume the cost of and responsibility for satisfactorily accomplishing all changes in the work as shown. All directions, specifications and recommendations by manufacturers for the installation, handling, storing, adjustment, and operation of their equipment shall be complied with and responsibility for proper performance shall continue to rest with the Contractor.

f.) Except as otherwise provided for by the provisions of M.G.L. Ch. 30, Sec. 39J, the Contractor shall not have any right of appeal from the decision of the City condemning any materials furnished if the Contractor fails to obtain the approval for substitution in accordance with these provisions. If any substitution is more costly, the Contracotr shall pay for such costs

22. In addition to other guarantees or warranties required under law or other sections of the specification, the Contractor warrants all materials furnished and labor performed under this Contract to be free from defects or errors in workmanship or installation for a period of one year from the date of Completion of the work, as certified by the Project Manager. The Contractor shall indemnify the City of Newton for the full cost of any damage to the property that may result by reason of such defects or errors and shall indemnify the City of Newton from and against any and all claims, demands. losses, costs, expenses, liabilities and damages, including reasonable attorney's fees and expenses, arising out of or on account of this Contract, including but not limited to claims brought against the City of Newton for alleged infringement of patents based upon any methods of construction or application of upon materials furnished under the Contract.

23. The Contractor shall make no excavation in any public way or utility easement unless at least forty-eight (48) hours, exclusive of Saturdays, Sundays and legal holidays, before the proposed excavation is to be made, he has given notice in writing by registered mail, of the proposed excavation to such Public Utility Companies as supply gas, electricity and telephone service in the City, to such private companies as supply cable television service in the City and also to the City of Newton Water Department. Such notice shall set forth the name of the street and a reasonably accurate description of the location in which the excavation is to be made. The Contractor shall comply with the Dig Safe Law (G.L. c. 82, Sec. 40).

24. The Contractor shall exercise the greatest of care to ensure that no material being hauled either to or from the site by him or his sub- contractor's, is spilled onto any way, public or private, within the City limits. In the event that such spillage does occur, it shall be the Contractors' responsibility to remove the spilled material and clean the area by the end of the work day. If in the judgment of the Engineer, the Contractor has not satisfactorily cleaned the area of any spill, the Engineer may then order the area to be cleaned by the City at the Contractors' expense.

25. No cement or bituminous concrete shall be poured from October 30 to April 15, unless the Contractor receives prior written authority to do so from the Commissioner of Public Works.

26. By submitting a bid Contractor represents and warrants that it has the capability to perform in a year 2000 compliant manner. For the purpose of this paragraph “year 2000 compliant” means that Contractor will continue to perform in accordance with all requirements of this Agreement from, into and between the twentieth and twenty-first centuries, without delay or interruption in performance or delivery of services relating to the ability of systems used by the Contractor, or by parties upon whom the Contractor relies in the performance of this Agreement, to accurately interpret, convert, or process date/time data in electronic format.

END OF SECTION

Drawing for this bid must be obtained through the Purchasing Department (33 pages)

to ensure availability please call (617) 796-1220.

SUMMARY OF WORK

SECTION 01010

1.01 GENERAL PROVISIONS

A. Attention is directed to the CONTRACT AND GENERAL CONDITIONS and all Sections within DIVISION 01 - GENERAL REQUIREMENTS which are hereby made a part of this Section of the Specifications.

1.02 GENERAL SCOPE OF WORK

A. The redevelopment/renovation of the existing athletic field campus at Newton South High School generally includes the following:

1. Construction of a new synthetic running track, which generally includes the pulverization of the existing track, demolition of the existing grand stand and press box, construction of the new synthetic track (6-lanes on the oval and 8-lanes on the straightaway), construction of a new grand stand with press box, new drainage system including a polymer trench drain, perimeter fencing, bituminous concrete walkways, long/triple jump runways and landing pits, new polevault runway, two shot put circles and landing areas, new discus pad and cage and other appurtenances as detailed in the Contract Documents.

2. Construction of a new "infilled" synthetic turf football field inside the proposed synthetic running track, including installation of subsurface drainage system, gravel base, a scoreboard and other appurtenances as detailed in the Contract Documents.

3. Construction of a new "infilled" synthetic turf multipurpose field including installation of subsurface drainage system, gravel base, concrete anchor curbing, perimeter fencing and protective netting, concrete bleacher pads for portable spectator seating, bituminous concrete walkways, a scoreboard and other appurtenances as detailed in the Contract Documents.

4. Construction of a new natural turf baseball field with a 90-ft diamond, including installation of a subsurface drainage system, irrigation system, dugout enclosures, perimeter fencing and backstop, bleacher pads, two bullpen areas, a batting tunnel, concrete bleacher pads for portable spectator seating, bituminous concrete walkways, a scoreboard and other appurtenances as detailed in the Contract Documents.

5. Construction of a new natural turf softball field with a 60-ft diamond and a multipurpose field in the outfield including the installation of subsurface drainage systems, irrigation, dugouts, perimeter fencing and backstop, concrete bleacher pads for portable spectator seating, bituminous concrete walkways and other appurtenances as detailed in the Contract Documents.

B. In addition, the Work under the Contract includes:

1. The restoration of any items damaged or destroyed by encroaching upon areas outside the Project Site.

2. Providing and restoring, where appropriate, all temporary facilities.

2.01 TIME OF COMPLETION

A. All physical construction related to Base Bid work for Newton South High School shall commence as early as weather permits no earlier than **May 15, 2009** and the construction of the two synthetic turf fields, track and bleachers shall be substantially complete by **September 1, 2009**, all other work, including sodding of the natural turf fields shall be substantially complete by **October 2, 2009**, with final completion, including submission of close-out documents, by **October 16, 2009**.

3.01 LIQUIDATED DAMAGES

A. Liquidated damages will be assessed at $500 a day for each day that the job is not completed after the required substantial completion date.

END OF SECTION

EXISTING CONDITIONS

SECTION 01040

1.01 GENERAL PROVISIONS

A. Attention is directed to the CONTRACT AND GENERAL CONDITIONS and all Sections within DIVISION 01 - GENERAL REQUIREMENTS which are hereby made a part of this Section of the Specifications.

2.01 EXISTING CONDITIONS

A. Before submitting a bid, the Contractor shall make a thorough examination of the conditions at the site, checking the requirements of the Plans and Specifications with the existing conditions.

B. The Contractor will be provided an electronic copy of all drawings (if requested in writing) for purposes of laying out their work. No claim for extra compensation or extension of time will be allowed on account of the Contractor's failure to estimate properly the quantities, locations, and measurements of all items required to complete the work which could be discerned from visiting the site and a thorough review of the bid documents, drawings and specifications.

C. The Contractor shall report any discrepancies to the Engineer and request an interpretation prior to bid submission. Discrepancies discovered after award of Contract will be handled as detailed in the General Conditions.

D. Appendix A includes a section is geotechnical test pit data provided for information only. The Contractor assumes any risk associated with conclusions drawn from this information.

END OF SECTION

G:\713050\Specs\newton so hs_complete spec.doc

CONDUCT OF THE WORK

SECTION 01050

1.01 GENERAL PROVISIONS

A. Attention is directed to the CONTRACT AND GENERAL CONDITIONS and all Sections within DIVISION 01 - GENERAL REQUIREMENTS which are hereby made a part of this Section of the Specifications.

2.01 PROJECT MANAGEMENT

A. All adjacent dwelling units proximate to the project sites will be occupied during construction. The Contractor shall take all necessary precautions to ensure the public safety and convenience of the occupants during construction. Use of any on-sites structures by the Contractor, proximate to the sites work as a construction office, shall not be used unless the Owner gives express written consent.

B. Additional work may be completed by another contractor on Owner property adjacent to the project sites during construction. The Contractor shall make reasonable effort to avoid conflicts and delays of either project and coordinate as required with other contractors working at the project site. Delays resulting from failure to properly coordinate with other contractors will not be grounds for a claim for extra time or compensation.

C. The work must be completed in a continuous uninterrupted operation. The Contractor must use sufficient personnel and adequate equipment to complete all the necessary work requirements within a minimum period of time.

D. Unless specifically authorized by the Owner, in writing, the work must be conducted between the hours of 7:00 a.m. and 7:00 p.m. on Monday through Friday. No work is to be done on holidays, Saturdays, or Sundays other than for emergencies or as approved by the Owner.

E. The Contractor is responsible for the security of partially completed work until the Owner accepts the project.

F. There shall be no storage of materials, tools, and/or equipment within any of the occupied buildings. The Owner, in writing, must authorize any storage within City facilities.

G. Only materials and/or equipment intended and necessary for immediate use shall be brought onto the sites. At the end of each workday and at the completion of each phase of work, equipment and leftover or unused materials shall be removed from the sites.

3.01 SHUTDOWN OF SERVICES

A. The Contractor's attention is especially called to the fact that the continuous operation of services for the Owner is mandatory. The work cannot result in the shutdown of any major utilities in adjacent City facilities without the Owner’s consent in writing. If the Owner will not allow this shutdown, but wants instead a temporary means of supplying said services, the Contractor shall supply all labor, materials or whatever may be required to supply said temporary services at no extra cost to the Owner and in accordance with the state and local regulations on health and safety.

4.01 COORDINATION

A. The Contractor shall submit at the pre-construction conference for approval to the Owner a detailed operational schedule showing the sequence of operations prior to commencement of any work at the sites. The Owner must approve any changes to this operational plan.

B. The Contractor must retain on the Work sites during its progress a competent full time representative, satisfactory to the Owner. This representative shall not be changed, except with the consent of the Owner. The representative shall be in full charge of the work and all instructions given to this person by the Engineer shall be binding.

C. The Contractor must supply to the Owner the home telephone number of responsible persons who may be contacted during non-work-hours for emergencies on the Project.

END OF SECTION

SUBMITTALS - SHOP DRAWINGS, PRODUCT DATA, AND SAMPLES

SECTION 01300

1.01 GENERAL PROVISIONS

A. Attention is directed to the CONTRACT AND GENERAL CONDITIONS and all Sections within DIVISION 01 - GENERAL REQUIREMENTS which are hereby made a part of this Section of the Specifications.

1.02 RELATED DOCUMENTS

A. Consult the individual sections of the specifications for the specific submittals required under those sections and for further details and descriptions of the requirements.

2.01 GENERAL PROCEDURES FOR SUBMITTALS

A. Submittal Register. Within seven (7) days of receipt of a Notice to Proceed, the Contractor will furnish to the Engineer a complete listing of all submittals (Shop Drawings, Manufacturer's Data, Samples, etc.) required by these specifications in tabular form. This form will include columns sufficient to manage and track the submission and action for each submission. The Contractor will revise and update this form upon request of the Engineer.

B. Schedule of Values. Within seven (7) days of receipt of a Notice to Proceed, the Contractor will furnish to the Engineer a schedule of values for review and approval. The Contractor will revise and update this form upon request of the Engineer.

C. Timeliness - The Contractor shall transmit each submittal to the Engineer sufficiently in advance of performing related Work or other applicable activities so that the installation is not delayed by processing times, including disapproval and resubmittal (if required), coordination with other submittals, testing, purchasing, fabrication, delivery, and similar sequenced activities. No extension of time will be authorized because of the Contractor's failure to transmit submittals to the Engineer in advance of the Work.

D. Sequence - The Contractor shall transmit each submittal in a sequence which will not result in the Engineer's approval having to be later modified or rescinded by reason of subsequent submittals which should have been processed earlier or concurrently for coordination.

E. Contractor's Review and Approval - Only submittals received from and bearing the stamp of approval of the Contractor will be considered for review by the Engineer. Submittals shall be accompanied by a transmittal notice stating name of Project, date of submittal, "To", "From" (Contractor, Subcontractor, Installer, Manufacturer, Supplier), Specification Section, or Drawing No. to which the submittal refers, purpose (first submittal, resubmittal), description, remarks, distribution record, and signature of transmitter.

F. Engineer's Action - The Engineer will review the Contractor's submittals and return them with one of the following actions recorded thereon by appropriate markings:

1. Final Unrestricted Release: Where marked "Approved" the Work covered by the submittal may proceed provided it complies with the requirements of the Contract Documents.

2. Final-But-Restricted Release: When marked "Make Corrections Noted" the Work may proceed provided it complies with the Engineer' s notations or corrections on the submittal and complies with the requirements of the Contract Documents. Acceptance of the Work will depend on these compliance's.

3. Returned for Resubmittal: When marked "Revise and Resubmit", "Submit Specified Items" or "Rejected" the Work covered by the submittal (such as purchasing, fabrication, delivery, or other activity) should not proceed. The submittal should be revised or a new submittal resubmitted without delay, in accordance with the Engineer's notations stating the reasons for returning the submittal.

G. Processing - All costs for printing, preparing, packaging, submitting, resubmitting, and mailing, or delivering

submittals required by this contract shall be included in the Contract Sum.

3.01 OR EQUALS

A. Definition - Whenever a specification section names one or more brands for a given item, and the Contractor wishes to submit, for consideration, another brand, the submission shall be considered an "or-equal" or a "material substitution". For the purposes of this Contract, the terms "or-equal" and "material substitution" shall be considered synonymous.

B. In no case may an item be furnished on the Work other than the item named or described, unless the Engineer, shall consider the item equal to the item so named or described.

C. The equality of items offered as "equal" to items named or described shall be proved to the satisfaction of the Engineer at the expense of the Contractor submitting the substitution.

D. The Engineer and/or the Owner may require that full size samples of both the specified and proposed products be submitted for review and evaluation. The Contractor shall bear full cost for providing, delivering, and disposal of all such samples.

E. The Contractor shall assume full responsibility for the performance of any item submitted as an "Or-Equal" and assume the costs of any changes in any Work which may be caused by such substitution.

F. Or Equal Approval Process - On the transmittal, or on a separate sheet attached to the submission, the Contractor shall direct attention to any deviations, including minor limitations and variations, from the Contract Documents.

1. The Contractor shall submit to the Engineers for consideration of any or-equal substitution a written point-by-point comparison containing the name and full particulars of the proposed product and the product named or described in the Contract Documents.

2. Such submittal shall in no event be made later than 10 calendar days prior to the incorporation of the item into the Work. This requirement may be waived by the Engineer upon written request.

3. Upon receipt of a written request for approval of an or-equal substitution, the Engineer shall investigate whether the proposed item shall be considered equal to the item named or described in the Contract Documents. Upon conclusion of the investigation, the Engineer shall promptly advise the Contractor that the item is, or is not, considered acceptable as on Or-Equal substitution. Such written notice must have the concurrence of the Owner.

4.01 SUBMISSION OF SHOP DRAWINGS

A. Shop Drawings shall be complete and to scale, giving all information necessary or requested in the individual section of the specifications. They shall also show adjoining Work and details of connection thereto.

B. Shop Drawings shall be for whole systems. Partial submissions will not be accepted.

C. The Engineer reserves the right to review and approve shop drawings only after approval of related product data and samples.

D. Shop drawings shall be properly identified and contain the name of the project, name of the firm submitting the shop drawings, shop drawing number, date of shop drawings and revisions, Contractor's stamp of approval, and sufficient spaces near the title block for the Engineer's stamp.

E. The Contractor shall submit to the Engineer one legible, reproducible transparency and four (4) black line prints of each shop drawing. Transparency and prints shall be mailed or delivered in roll form. Each submittal shall be accompanied by a transmittal notice.

F. When the transparency is returned by the Engineer with the stamp "Revise and Resubmit", “Submit Specified Items” or "Rejected", the Contractor shall correct the original drawing or prepare a new drawing and resubmit a transparency and four (4) prints thereof to the Engineer for approval. This procedure shall be repeated until the Engineer’s approval is obtained.

G. When the transparency is returned by the Engineer with the stamp "Approved" or "Make Corrections Noted", the Contractor shall provide and distribute the prints for all Contractors and Subcontractors use.

H. The Contractor shall maintain one full set of approved shop drawings at the site. The Contractor shall produce a set of coordination drawings before the installation of any electrical work.

5.01 SUBMISSION OF PRODUCT DATA

A. The Contractor shall submit five (5) copies of Product Data to the Engineer. All such data shall be specific and identification of material or equipment submitted shall be clearly marked in ink. Data of general nature will not be accepted.

B. Product Data shall be accompanied by a transmittal notice. The Contractor's stamp of approval shall appear on the printed information itself, in a location which will not impair legibility.

C. Product Data returned by the Engineer as "Rejected" shall be resubmitted in five (5) copies until the Engineers approval is obtained.

D. When the Product Data is acceptable, the Engineer will stamp them "Approved" or "Make Corrections Noted", retain two (2) copies, and return three (3) copies to the Contractor. The Contractor shall provide and distribute additional copies as may be required to complete the Work.

E. The Contractor shall maintain one full set of approved, original, Product Data at the site.

6.01 SUBMISSION OF SAMPLES

A. Unless otherwise specified in the individual section, the Contractor shall submit two (2) specimens of each sample required for submission.

B. Samples shall be of adequate size to permit proper evaluation of materials. Where variations in color or in other characteristics are to be expected, samples shall show the maximum range of variation. Materials exceeding the variation of approved samples will not be approved on the Work.

C. Samples of items of interior and exterior finishes shall be submitted all at once to permit a coordinated selection of colors and finishes.

D. Samples which can be conveniently mailed shall be sent directly to the Engineer, accompanied by a transmittal notice. All transmittals shall be stamped with the Contractor's approval stamp of the material submitted.

E. All other samples shall be delivered at the field office of the Project Representative with sample identification tag attached and properly filled in. Transmittal notice of samples so delivered with the Contractor's stamp of approval shall be mailed to the Engineer.

F. If a sample is rejected by the Engineer, a new sample shall be resubmitted in the manner specified herein above. This procedure shall be repeated until the sample is approved by the Engineer.

G. Samples will not be returned unless return is requested at the time of submission. The right is reserved to require submission of samples whether or not particular mention is made in the specifications, at no additional cost to the Owner.

END OF SECTION

G:\713050\Specs\newton so hs_complete spec.doc

TEMPORARY FACILITIES

SECTION 01500

1.01 GENERAL PROVISIONS

A. Attention is directed to the CONTRACT AND GENERAL CONDITIONS and all Sections within DIVISION 01 - GENERAL REQUIREMENTS which are hereby made a part of this Section of the Specifications.

1.02 GENERAL REQUIREMENTS

A. The Contractor shall be responsible for providing and maintaining all temporary facilities until Substantial Completion. Removal of such prior to Substantial Completion must be with the concurrence of the Engineer. The Contractor bears full responsibility for providing any facility removed prior to Substantial Completion

B. Removal of all temporary facilities shall be a condition precedent to Substantial Completion unless directed otherwise by the Engineer or specifically noted in the specifications.

C. The Contractor must comply with all safety laws and regulations of the state of Massachusetts, the United States Government, and local government agencies applicable to Work under this contract. The Contractor's attention is directed to the state of Massachusetts, Department of Labor and Industries Regulations.

D. Submittals:

1. Within seven (7) days from Notice to Proceed, Contractor will submit for approval of the Engineer a site layout plan indicating the location of all temporary facilities described within this specification.

2. Shop drawings showing proposed project sign (if applicable).

3. Manufacturer’s Data for proposed field offices (if applicable).

2.01 FIELD OFFICES

A. A field office is not required for this project.

3.01 TEMPORARY TELEPHONES

A. The Contractor shall provide a cell phone on site at all times with the same phone numbers. This shall be the number that the Engineer or Owner may contact in times of emergency.

4.01 TEMPORARY TOILETS

A. The Contractor shall provide and service an adequate number of toilet booths with chemical type toilets.

B. The toilets shall be maintained by the Contractor in a clean and orderly condition in compliance with all local and state health requirements.

C. Under no circumstances will the Contractor’s personnel be allowed to use Owner’s toilets.

5.01 TEMPORARY CONSTRUCTION FENCE

A. The Contractor shall be responsible for providing and maintaining temporary fencing or barricades around the construction site as shown and may be necessary to ensure the safety of all persons authorized or unauthorized. Such protective measures shall be located and constructed as required by local, state, and federal ordinances, laws, codes, or regulations and as required by the Engineer or Owner.

6.01 TEMPORARY STRUCTURES AND MATERIAL HANDLING

A. The Contractor shall provide such storage sheds, temporary buildings, or trailers as required for the performance of

the Contract. Subcontractors shall provide their own temporary buildings and trailers. Location of such to be approved by the Engineer.

B. Materials shall be handled, stored, installed, cleaned, and protected in accordance with the best practice in the industry and, except where otherwise specified in the Contract Documents, in accordance with manufacturer's specifications and directions.

C. The Contractor must obtain the permission of the Owner for the use of any storage facilities available on site, but the Owner assumes no responsibility for articles stored.

7.01 HOISTING FACILITIES

A. Except as otherwise specified, the Contractor shall provide, operate, and remove material hoists, cranes, and other hoisting as required for the performance of the Work by all trades. All such hoisting service shall be without cost to the Subcontractors.

8.01 TEMPORARY WATER

A. The Contractor may make use of the available water supply at the site for construction purposes, provided the permission of the Owner is obtained beforehand and only as long as the water is not used wastefully. The Owner requires the use of a water meter and backflow preventer if temporary water is needed.

B. The Contractor shall provide all necessary piping and hoses to utilize the available sources of water.

C. The Contractor shall provide an adequate supply of cool drinking water with individual drinking cups for personnel on the job.

9.01 TEMPORARY ELECTRICITY

A. The Contractor may make use of the electricity as available at the site, metered and paid for by the Owner, provided that the Contractor shall supply proper adapters and extension cords. Power requirements that cannot be met locally by the Owner will be the responsibility of the Contractor.

1. Where heavy duty electric equipment drawing current in excess of 15 amperes is involved, the Contractor shall provide temporary service to supply the power.

2. The temporary electric service shall include, but not be limited to labor, materials, and equipment necessary to supply temporary power of adequate capacity for the project.

3. Transformers and meters, when required by the power company, will be furnished by the power company and the contractor shall pay the costs therefore.

B. Temporary electrical Work shall be performed under the direct supervision of at least one master electrician, who will be present on the project at all times when such work is being performed.

C. All temporary work shall be provided in conformity with the National Electric Code, state and local laws, and requirements of the power company.

D. Dismantle and completely remove from the project site, temporary electrical facilities only when the permanent electrical system is operational and accepted by the Engineer.

E. Permits shall be the responsibility of the Contractor to obtain.

10.01 WEATHER PROTECTION

A. It is to be specifically understood that the Contractor shall do no work under any conditions deemed unsuitable by the Contractor to the execution of the Work. This provision shall not constitute any waiver, release, or lessening of the Contractor's obligation to bring the Work to Substantial Completion within the period of time set forth in the Contract Documents.

END OF SECTION

PROTECTION

SECTION 01510

1.01 GENERAL PROVISIONS

A. Attention is directed to the CONTRACT AND GENERAL CONDITIONS and all Sections within DIVISION 01 - GENERAL REQUIREMENTS which are hereby made a part of this Section of the Specifications.

1.02 PROTECTION OF PERSONS & PROPERTIES

A. All Owner facilities may be occupied during construction. The Contractor shall take all necessary precautions to ensure the public safety and convenience of the occupants during construction.

B. Any damage to buildings, roads, (public and private), bituminous concrete areas, fences, lawn areas, trees, shrubbery, poles, underground utilities, etc. shall be made good by and at the Contractor's own expense, all to the satisfaction of the Owner.

C. The Contractor shall patch, repair and/or replace all adjacent materials and surfaces damaged after the installation of new work at no expense to the Owner. All repair and replacement work shall match the existing in kind and appearance.

D. See Section 5.01 regarding noise and dust control.

2.01 TEMPORARY PROTECTION

A. The Contractor shall:

1. Protect excavations, trenches, buildings, and materials at all times from rain water, ground water, backing-up, or leakage of sewers, drains, or other piping, or from water damage of any origin. Provide all pumps, piping, coverings, and other materials and equipment as required by job conditions to accomplish this requirement.

2. Protect pavement and slabs to receive work by other trades from any soiling which will prevent proper adhesion of subsequent Work. Pavement and slabs shall be left clean and free of blemishes at the time other trades begin the application of their work.

3. Protect all surfaces to receive work by other trades from any soiling which will prevent proper execution of subsequent work.

4. Protect all existing vegetation to remain that is in proximity to the site work required for completion of the construction project.

5. Protect the private property of the Owner. Any areas damaged by the Contractor shall be restored to the original condition or compensated at the Contractor's expense.

B. After the installation of the Work by any Subcontractor is completed, the Contractor shall be responsible for its protection and for repairing, replacing, or cleaning any such Work which has been damaged by other trades or by any other cause, so that all Work is in first class condition at the time of Substantial Completion.

3.01 ACCESS

A. The Contractor shall, at all times, leave an unobstructed way along walks, parking lots and roadways outside the indicated limit of work, and shall maintain barriers and lights for the protection of all persons and property in all locations where materials are stored or work is in progress.

4.01 SECURITY

A. The Contractor shall be responsible for providing all security precautions necessary to protect the Contractor's and Owner's interests.

B. Where excavation is involved, the Contractor shall be responsible for providing continuous watchmen service as necessary, to insure adequate protection of the general public.

5.01 NOISE AND DUST CONTROL

A. The Contractor shall take special measures to protect the neighbors and general public from noise, dust, and other disturbances as needed and/or directed by the Owner throughout construction by:

1. Keeping common pedestrian and vehicular circulation areas clean and unobstructed.

2. Applying water or other dust palliatives as needed for dust mitigation.

3. Keeping all loose trash picked up and prevent it from blowing outside the limit or work.

6.01 FIRE PROTECTION

A. The Contractor shall take necessary precautions to insure against fire during construction. The Contractor shall be responsible to ensure that the area within contract limits is kept orderly and clean and that combustible rubbish and construction debris is promptly removed from the site.

B. Installation of equipment suitable for fire protection shall be done as soon as possible after commencement of the Work.

7.01 WIND PROTECTION

A. Should high wind or severe weather warnings be issued by the U.S. Weather Bureau, the Contractor shall take every precaution to minimize danger to persons, to the Work, and to the adjacent property.

8.01 WEATHER PROTECTION

A. The Contractor shall provide Weather Protection as required by Specification Section 01500, Temporary Facilities, and any other specific requirements of the Contract Documents.

9.01 COORDINATION - NOTIFICATIONS

A. The Contractor shall coordinate all work activities with the Owner. It is noted that the field areas are adjacent to Newton South High School (NSHS) and parking is utilized by students at this location.

END OF SECTION

G:\713050\Specs\newton so hs_complete spec.doc

CLEANING UP

SECTION 01520

1.01 GENERAL PROVISIONS

A. Attention is directed to the CONTRACT AND GENERAL CONDITIONS and all Sections within DIVISION 01 - GENERAL REQUIREMENTS which are hereby made a part of this Section of the Specifications.

1.02 RELATED DOCUMENTS

A. Consult the individual sections of the specifications for cleaning of Work installed under those sections.

2.01 CLEANING DURING CONSTRUCTION

A. Conduct cleaning and disposal operations to comply with local ordinances, anti-pollution laws, and the Owner.

1. Do not burn or bury rubbish and waste materials on the site.

2. Do not dispose of volatile wastes such as mineral spirits, oil, or paint thinner in storm or sanitary drains.

3. Do not dispose of wastes into streams or waterways.

B. Wet down dry materials and rubbish to lay dust and prevent blowing dust.

C. Maintain the Site free from accumulations of waste, debris, and rubbish.

D. Provide on-site containers for collection of waste materials and rubbish.

E. At the end of each day, remove and legally dispose waste materials and rubbish from site.

F. Schedule cleaning operations so that dust and other contaminants resulting from cleaning process will not fall on wet, newly painted or applied surfaces.

G. Disposal of materials shall be in compliance with all applicable laws, ordinances, codes, and by-laws.

3.01 FINAL CLEANING

A. Prior to submitting a request to the Engineer to certify Substantial Completion of the Work, the Contractor shall inspect all interior and exterior spaces and verify that all waste materials, rubbish, tools, equipment, machinery, and surplus materials have been removed, and that all sight-exposed surfaces are clean. Leave the Project clean and ready for occupancy.

B. Unless otherwise specified under other sections of the Specifications, the Contractor shall perform final cleaning operations as herein specified prior to final inspection.

C. Cleaning shall include all surfaces, interior and exterior, which the Contractor has had access to, whether new or existing.

D. Employ experienced workmen or professional cleaners for final cleaning.

E. Use only cleaning materials recommended by the manufacturer of the surface to be cleaned.

F. Use cleaning materials which will not create a hazard to health or property and which will not damage surfaces.

G. Remove grease, mastic, adhesive, dust, dirt, stains, labels, fingerprints, and other foreign materials from sight-exposed interior and exterior surfaces. This includes cleaning of the Work of all finishing trades where needed, whether or not cleaning by such trades is included in their respective specifications.

H. Repair, patch, and touch up marred surfaces to the specified finish, to match adjacent surfaces.

I. In cleaning items with manufacturer's finish or items previously finished by a Subcontractor, care shall be taken not to damage such manufacturer's or Subcontractor's finish. Any damage to finishes caused by cleaning operations shall be repaired at the Contractor's expense.

J. Broom clean exposed concrete surfaces and paved surfaces. Rake clean other surfaces of grounds.

K. The City of Newton's responsibility for cleaning commences at Substantial Completion and transfer of occupancy from the Contractor to the City.

END OF SECTION

G:\713050\Specs\newton so hs_complete spec.doc

PROJECT CLOSEOUT

SECTION 01700

1.01 GENERAL PROVISIONS

A. Attention is directed to the CONTRACT AND GENERAL CONDITIONS and all Sections within DIVISION 01 - GENERAL REQUIREMENTS which are hereby made a part of this Section of the Specifications.

1.02 RELATED DOCUMENTS

A. Consult the individual sections of the specifications for specific items required under those sections.

2.01 PERMITS

A. The Contractor shall coordinate the efforts of all Subcontractors and obtain any final permits that may be required.

3.01 SUBSTANTIAL COMPLETION

A. Prior to requesting Substantial Completion, the Contractor shall make a thorough inspection of the Work. During this inspection, the Contractor shall prepare a comprehensive list of all items remaining to be completed or corrected. This list shall include all remaining Contractor and Subcontractor items to be provided under the Contract Documents.

B. Upon completion of the items noted on the Contractor's list, the Contractor shall notify the Engineer that the Work is Substantially Complete. The Engineer shall then conduct a similar thorough inspection. If the Engineer agrees that the Work is Substantially Complete, the Engineer will promptly make a thorough inspection and prepare a punch list, setting forth in accurate detail any items on the Contractor's list and additional items that are not acceptable or incomplete. The Contractor shall coordinate all Subcontractors to achieve prompt completion of the punch list.

C. The Contractor shall not be relieved of the responsibility to provide Contract items left off the Engineer's punch list.

D. If the Engineer determines that the Work is not Substantially Complete, the Engineer shall inform the Contractor of those items that must be completed before the Engineer will prepare a punch list. Upon completion of those items, the Contractor shall again request the Engineer to prepare a punch list.

E. When the punch list has been prepared, the Engineer will arrange a meeting with the Contractor and Subcontractors to identify and explain all punch list items and answer questions on work which must be done before final acceptance.

F. The Engineer may revise the punch list, from time to time, to ensure that all items of Work are properly completed.

G. The Engineer shall prepare the Certificate of Substantial Completion.

4.01 RECORD DRAWINGS

A. See Section 01720 – Surveys and Record Drawings

5.01 OPERATING AND MAINTENANCE INSTRUCTIONS

A. Consult the individual sections of the specifications for the specific requirements for those sections and for further details and descriptions of the requirements

B. Prior to final payment and completion, the Contractor shall provide all Operating Manuals and Maintenance Instructions as required by the Contract Documents. As a minimum, operating and maintenance manuals will be provided for the track and synthetic turf surfaces and related equipment and for all other components and systems as specified.

C. Operating Instructions and Manuals

1. Subcontractors, installers, and suppliers shall furnish to the Contractor two sets of operating and maintenance instructions of all mechanical, electrical, and manually operated equipment furnished and installed by them. Mechanical and electrical subcontractors shall furnish instructions as specified in their respective sections.

2. The Contractor shall collect all of the above instructions, bind them into two complete sets, and submit them to the Engineer who will deliver them to the Owner.

3. Submission of operating and maintenance instructions shall be a condition precedent to final payment.

D. Instruction of Owner's Personnel

1. Where specified in the individual sections of the specifications, the Contractor and Subcontractor shall instruct the Owner's personnel at the site, in the use and maintenance of equipment installed under the Contract.

2. Submission to the Engineer of a Certificate of Compliance to this requirement, signed by the Contractor and the Owner's Representative, shall be a condition precedent to final payment.

6.01 FINAL COMPLETION

A. Full Release of Retainage

1. Upon completion of all work, and after receipt of all appropriate marked up As Built Drawings, Operating Manuals, Warranties, Guarantees, and Spare Parts required by the Contract Documents, the Engineer shall prepare the Certificate of Final Completion.

2. The Contractor's signature on this Certificate shall be notarized.

3. The Contractor shall provide a final Application for Payment to complement the close-out process.

B. Partial Release of Retainage

1. If within 60 days after Substantial Completion, any of the items on the Engineers punch list are not complete or if the Contractor has not provided the appropriate marked up As Built Drawings, Operating Manuals, Warranties, Guarantees, or Spare Parts the Engineer shall assign a monetary value for each incomplete item as well as any other items, and the Engineer shall prepare a Certificate for Partial Release of Retainage

2. If the Engineer is required to prepare a Certificate for Partial Release of Retainage, the Contractor shall still complete all remaining Work.

3. The Contractor's signature on this Certificate shall be notarized.

4. The Contractor may make a request for additional releases of retainage when portions of the Work listed on the Engineer's punch list have been satisfactorily completed. Each request shall be accompanied by a new application for payment and a new signed and notarized Certificate for Partial Release of Retainage.

5. Upon completion of all remaining items, the Final Release of Retainage shall be processed in accordance with paragraph A above.

END OF SECTION

G:\713050\Specs\newton so hs_complete spec.doc

SURVEYS AND RECORD DRAWINGS

SECTION 01720

1.01 GENERAL PROVISIONS

A. Attention is directed to the CONTRACT AND GENERAL CONDITIONS and all Sections within DIVISION 01 - GENERAL REQUIREMENTS which are hereby made a part of this Section of the Specifications.

1.02 RECORD DRAWINGS

A. Prior to final payment the Contractor shall provide an as-built plan of the field facilities stamped by a Professional Land Surveyor registered in Massachusetts demonstrating compliance with all Massachusetts Interscholastic Athletic Association (MIAA) (or as modified in the contract plans), American Sports Builders Association (ASBA) (or as modified in the contract plans), and Americans with Disabilities Act (ADA) requirements for layout, geometry, striping and slope requirements. An electronic version of the as-built plan in AutoCAD 2008 format shall also be provided.

B. Record Drawings shall consist of all the Contract Drawings.

C. From the sets of drawings furnished by the Owner, the Contractor shall reserve one set for record purposes. From this set, the Contractor shall detach and furnish, at no charge to the Mechanical and Electrical Subcontractors the drawings of their portion of the Work for the same purpose.

D. The Contractor and the above Subcontractors shall keep their marked up as-built set on the site at all times and note on it in colored ink or pencil, neatly and accurately, at the end of each working day, the exact location of their work as actually installed. This shall include the location and dimensions of underground and concealed Work, and any architectural, mechanical, or electrical variations from the Contract Drawings. All changes, including those issued by Addendum, Change Order, or instructions by the Engineer shall be recorded. Marked-up as-built drawings shall be prepared for the entire project and include all Work, including but not limited to:

1. The location of all underground utilities and appurtenances referenced to permanent surface improvements, both horizontally and vertically at ten (10)-foot intervals and at all changes of direction.

2. The location of all internal utilities and appurtunces, concealed by finish materials, including but not limited to valves, coils, dampers, vents, cleanouts, strainers, pipes, junction boxes, turning vanes, variable and constant volume boxes, ducts, traps, and maintenance devices.

a) The location of these items shall be shown by offsets to structure and drawing grid lines.

b) The tolerance for the actual location of these items on the marked up As Built Drawings shall be plus or minus two (2) inches.

c) Each item shall be referenced by showing a tag number, areas served, and function on the marked up As Built drawing

E. The Engineer may periodically inspect the marked up as-built drawings at the site. The proper and current maintenance of the information required on these drawings shall be a condition precedent to approval of the monthly applications for payment.

F. At Substantial Completion, the Contractor shall submit the complete set of marked up as-built drawings to the Engineer. The Contractor shall check all marked up as-builts prepared by subcontractors and certify in writing on the title sheet of the drawings that they are complete and correct prior to submission to the Engineer.

G. The Engineer shall review the marked up as-built drawings and verify by letter to the Owner that the Work is complete. The Contractor shall incorporate any and all changes onto the original drawings.

H. The Contractor may make a written request for copies of the completed Record Drawings. The Contractor shall reimburse the Owner directly for the cost of printing of any requested Record Drawings.

I. Submission of accurate marked up as-built drawings and their approval by the Engineer shall be a condition precedent to final payment.

END OF SECTION

G:\713050\Specs\newton so hs_complete spec.doc

EROSION AND SEDIMENT CONTROL

SECTION 02020

PART 1 - GENERAL

1.01 GENERAL PROVISIONS

A. Attention is directed to the CONTRACT AND GENERAL CONDITIONS and all Sections within DIVISION 01 - GENERAL REQUIREMENTS which are hereby made a part of this Section of the Specifications.

1.02 SUMMARY

A. This Section specifies equipment and materials for an erosion and sediment control program for minimizing erosion and siltation during the construction phase of the project. The erosion and sediment control provisions detailed on the Drawings and specified herein are the minimum requirements for an erosion control program. The Contractor must review the Order of Conditions for the project to ensure compliance with any orders required above and beyond those described in this specification section.

1.03 RELATED WORK

A. Examine Contract Documents for requirements that affect work of this Section. Other Specification Sections that directly relate to work of this Section include, but are not limited to:

1. Section 02060 – Site Clearing
2. Section 02070 – Selective Demolition
3. Section 02300 – Earthwork

1.04 SUBMITTALS

A. Proposed methods, materials to be employed, and schedule for effecting erosion and siltation control and preventing erosion damage shall be submitted for approval. Submittals shall include:

1. List of proposed materials including manufacturer's product data.

2. Schedule of erosion control program indicating specific dates from implementing programs in each major area of work.

B. Samples

The following samples shall be submitted:

Sample	Size
Silt - sock	12 X 12 in.

1.05 EROSION CONTROL PRINCIPLES

A. Erosion Control Principles

The following erosion control principles shall apply to the land grading and construction phases:

1. Stripping of vegetation, grading, or other soil disturbance shall be done in a manner which will minimize soil erosion.

2. Whenever feasible, natural vegetation shall be retained and protected.

3. Extent of area which is exposed and free of vegetation and duration of its exposure shall be kept within practical limits.

4. Temporary seeding, mulching, or other suitable stabilization measures shall be used to protect exposed critical areas during prolonged construction or other land disturbance. Prolonged exposure of unstabilized soil shall not exceed 60 days.

5. Drainage provisions shall accommodate increased runoff resulting from modifications of soil and surface conditions during and after development or disturbance. Such provisions shall be in addition to existing requirements.

6. Sediment shall be retained on-site.

7. Erosion control devices shall be installed prior to start of clearing and grubbing operations and excavation work.

B. Erosion Protection

Cut and fill slopes and stockpiled materials shall be protected to prevent erosion. Slopes shall be protected with permanent erosion protection when erosion exposure period is expected to be greater than or equal to two months, and temporary erosion protection when erosion exposure period is expected to be less than two months.

1. Permanent erosion protection shall be accomplished by seeding with grass and covering with an erosion protection material, as appropriate for prevailing conditions.

2. Temporary erosion protection shall be accomplished by covering with an erosion protection materials, as appropriate for prevailing conditions.

3. Except where specified slope is indicated on Drawings, fill slopes shall be limited to a grade of 2:1 (horizontal: vertical) cut slopes shall be limited to a grade of 2:1.

PART 2 - PRODUCTS

2.01 SILT FENCE

A. Silt fence shall be made of filter fabric. Fence shall be 2 ft high minimum.

1. Silt fence shall be Mirafi silt fence or equal.

2. Silt fence shall be supported by wooden posts, driven a minimum of 1 ft. into the ground. Posts shall be spaced 10 ft. o.c. maximum.

3. Fencing other than that specified above shall be subject to review and acceptance by the City's Representative.

2.02 SILT SOCKS

A. The silt socks for construction of erosion control devices shall be 12" in diameter.

B. In areas of slopes grater then 2:1 (horizontal: vertical) silt sock must be secured in place by stakes.

C. Silt socks shall be either lapped or butted at the ends to create a continuous line of defense.

2.03 HAY BALES

A. Hay bales for construction of erosion control devices shall be new, firm, bound livestock feed-grade bound with biodegradable twine.

2.04 TEMPORARY SEED COVER

A. Seed mixture for temporary cover by hydroseeding application shall conform to the following:

Quantity per 1000 sq. ft. Coverage	Material
27-1/2 lb.	Wood Fiber Mulch
4 lb.	Seed
1/2 lb.	Annual Ryegrass
22 lb.	10-6-4 Fertilizer
69 gal.	Water

B. Hydroseeding Equipment

Hydroseeding equipment may be either portable or truck mounted, with dual agitation, a minimum working volume of 1000 gallons and a minimum spray range of 80 ft.

1. Hydroseeding equipment must be capable of uniformly applying the slurry mix including wood fiber mulch if required, at the specified rate, and at the required locations.

2. Hydromulching equipment, either trailer or truck mounted, must be capable of uniformly applying straw or hay mulch at a minimum mulching rate of 8 tons per hour, at a distance of not less than 80 ft.

2.05 FILTER BASKETS

A. Filter baskets shall be Metal-Era Inlet Baskets, manufactured by Metal-Era Inc., Wukesha, WI 53186 or equal. Baskets shall be installed at all catch basins in lieu of hay bale catch basin filters. Filter baskets shall include a nonwoven geotextile filter fabric material with a minimum Grab Strength of 45 lb., Mullen Burst Strength of 60 psi minimum, a minimum permeability of 120 gpm/sq. ft., and an opening no greater than No. 20 U.S. Standard Sieve.

PART 3 - EXECUTION

3.01 SILT FENCE

A. Silt fence shall be constructed and installed as indicated on the Drawings, prior to start of work on the site.

B. Silt fence shall be installed around all stockpiled soils and catch basins.

3.02 SILT SOCKS

A. Silt socks shall be constructed and installed as required by Order of Conditions, prior to start of work on the site.

3.03 HAY BALE DIKE

A. Bales shall be constructed and installed as indicated on the Drawings or as necessary. Bales shall be placed in a row with ends tightly abutting the adjacent bales. Each bale shall be embedded in the soil a minimum of 4 in. Bales shall be securely anchored in place by wooden stakes driven through the bales. The first stake in each bale shall be angled toward the previously laid bale to force the bales together.

3.04 HAY BALE CHECK DAM

A. Check dams shall be constructed and installed as indicated on the Drawings or as necessary.

3.05 HAY BALE FILTER

A. Hay bale filters shall be placed at all inlets to drainage structures or pipes as they are installed. Outlet protection work shall be constructed before runoff is allowed to enter the drainage system. Filters must be inspected regularly and replaced as necessary.

3.06 HYDROSEEDING

A. Seed for temporary cover shall be spread by the hydroseeding method, utilizing power equipment commonly used for that purpose. Seed, fertilizer, mulch and water shall be mixed and applied to achieve application quantities specified. Material shall be applied in 2 equal applications, with the equipment during the second pass moving perpendicular to direction employed during the first pass. Hydroseeding shall not be done when it is raining or snowing, or when wind velocity exceeds 5 mph.

B. If the results of hydroseeding application are unsatisfactory, the mixture and/or application rate and methods shall be modified to achieve the required results.

C. After the grass has appeared, all areas and parts of areas which fail to show a uniform stand of grass, for any reason whatsoever, shall be reseeded and such areas and parts of areas seeded repeatedly until all areas are covered with a satisfactory growth of grass.

3.07 FILTER BASKETS

A. Baskets may be installed at all catch basins in lieu of Hay Bale Catch Basin Filters. Filter baskets shall be installed in accordance with manufacturer's recommendations. Maintain filter baskets as required and as follows. Baskets shall be inspected within 24 hours after each rainfall or daily during extended periods of precipitation. Repairs shall be made immediately, as necessary, to prevent particles from reaching the drainage system. Sediment deposits shall be removed after each storm event, or more often if the fabric becomes clogged. Clean clogged fabric and repair or replace damaged filter fabric.

3.08 MAINTENANCE AND REMOVAL OF EROSION CONTROL DEVICES

A. Wetland area, water courses, and drainage swales adjacent to construction activities shall be monitored weekly for evidence of silt intrusion and other adverse environmental impacts, which shall be corrected immediately upon discovery.

B. Culverts and drainage ditches shall be kept clean and clear of obstructions during construction period.

C. Erosion Control Devices

1. Sediment behind the erosion control device shall be checked twice each month and after heavy rain. Silt shall be removed if greater than 6 in. deep.

2. Condition of erosion control device shall be checked twice each month or more frequently as required. Damaged and/or deteriorated items shall be replaced. Erosion control devices shall be maintained in place and in effective condition.

3. Hay bales shall be inspected weekly and maintained or replaced as required to maintain both their effectiveness and essentially their original condition. Underside of bales shall be kept in close contact with the earth below at all times, as required to prevent water from washing beneath bales.

4. Sediment deposits shall be disposed of off-site, in a location and manner which will not cause sediment nuisance elsewhere.

5. Maintenance of silt socks are required if:

a. Deformation is present.

b. Sock is rolling due to hydraulic force

c. Loss of ground contact

d. Sediment accumulation of ½ sock height.

6. Repair of silt socks is required if:

a. Holes, rips or tears are present.

b. Pinch or localized diameter reduction of more then ½ the original diameter is present.

D. Removal of Erosion Control Devices

1. Erosion control devices shall be maintained until all disturbed earth has been paved or vegetated, at which time they shall be removed. After removal, areas disturbed by these devices shall be regraded and seeded.

2. Erosion protection material shall be kept securely anchored until acceptance of the entire Project.

END OF SECTION

G:\713050\Specs\newton so hs_complete spec.doc

SITE CLEARING

SECTION 02060

PART 1 - GENERAL

1.01 GENERAL PROVISIONS

A. Attention is directed to the CONTRACT AND GENERAL CONDITIONS and all Sections within DIVISION 01 - GENERAL REQUIREMENTS which are hereby made a part of this Section of the Specifications.

1.02 SUMMARY

A. This Section includes the following:

1. Topsoil & subsoil stripping.

B. Related Sections include the following:

Section 02070 – Selective Demolition
Section 02300 – Earthwork

1.03 DEFINITIONS

A. Topsoil: Natural or cultivated surface-soil layer containing organic matter and sand, silt, and clay particles; friable, pervious, and black or a darker shade of brown, gray, or red than underlying subsoil; reasonably free of subsoil, clay lumps, gravel, and other objects more than 2 inches (50 mm) in diameter; and free of weeds, roots, and other deleterious materials.

1.04 MATERIALS OWNERSHIP

A. Except for materials indicated to be stockpiled, reused, or to remain the City's property, cleared materials shall become Contractor's property and shall be removed from the site.

1.05 SUBMITTALS

A. Photographs or videotape, sufficiently detailed, of existing conditions of trees and plantings, adjoining construction, and site improvements that might be misconstrued as damage caused by site clearing, if any.

B. Record drawings according to Division 1 Section "Contract Closeout."

1. Identify and accurately locate capped utilities and other subsurface structural, electrical, and mechanical conditions.

1.06 QUALITY ASSURANCE

A. Preinstallation Conference: Conduct pre-clearing conference at Project site prior to commencement of clearing operations.

1.07 PROJECT CONDITIONS

A. Traffic: Minimize interference with adjoining roads, parking lots, streets, walks, and other adjacent occupied or used facilities during site-clearing operations.

1. Do not close or obstruct streets, walks, parking lots, or other adjacent occupied or used facilities without permission from the City and authorities having jurisdiction.

2. Provide alternate routes around closed or obstructed traffic ways if required by authorities having jurisdiction.

B. Improvements on Adjoining Property: Authority for performing indicated removal and alteration work on property adjoining the City's property (if any) will be obtained by the City before award of Contract.

C. Salvable Improvements: Carefully remove items indicated to be salvaged and store on the City's premises where indicated in accordance with demolition plan, or if not indicated then where acceptable to the City.

D. Notify utility locator service for area where Project is located before site clearing.

PART 2 - PRODUCTS (Not Applicable)

PART 3 - EXECUTION

3.01 PREPARATION

A. Protect and maintain benchmarks and survey control points from disturbance during construction.

B. Provide erosion-control measures to prevent soil erosion and discharge of soil-bearing water runoff or airborne dust to adjacent properties and walkways.

C. Protect existing site improvements to remain from damage during construction.

1. Restore damaged improvements to their original condition, as acceptable to the City.

3.02 CLEARING AND GRUBBING

A. Remove obstructions, grass, and other vegetation to permit installation of new construction. Removal includes digging obstructions and grubbing roots.

1. Completely remove obstructions, and debris extending to a depth of 18 inches (450 mm) below exposed subgrade.

2. All debris to be removed from site and properly disposed of.

B. Fill depressions caused by clearing and grubbing operations with satisfactory soil material, unless further excavation or earthwork is indicated.

1. Place fill material in horizontal layers not exceeding 8-inch (200-mm) loose depth, and compact each layer to a density equal to adjacent original ground.

3.03 DISPOSAL

A. Disposal: Remove surplus soil material, unsuitable topsoil, obstructions, demolished materials, and waste materials, including trash and debris, and legally dispose of them off the City's property.

END OF SECTION

G:\713050\Specs\newton so hs_complete spec.doc

SELECTIVE DEMOLITION

SECTION 02070

PART 1 – GENERAL

1.01 GENERAL PROVISIONS

A. Attention is directed to the CONTRACT AND GENERAL CONDITIONS and all Sections within DIVISION 01 - GENERAL REQUIREMENTS which are hereby made a part of this Section of the Specifications.

1.02 SUMMARY

A. Work to include demolition of indicated existing utilities, structures and bituminous concrete pavement including but not limited to grandstand, scoreboards, monitoring will, pump chamber, electrical meter box, fencing and field events.

B. Except for items or materials indicated to be reused, salvaged, reinstalled, or otherwise indicated to remain the City's property, demolished materials shall become the Contractor's property and shall be removed from the site with further disposition at the Contractor's option and in full compliance with all applicable disposal regulations.

1.03 DEFINITIONS As follows:

A. Remove and Dispose: Remove and legally dispose of items except those indicated to be reinstalled, salvaged, or to remain the City’s property.

B. Salvage and Protect: Items indicated to be salvaged remain the City's property. Remove, clean, and store items to protect against damage. Stockpile in City's designated storage area.

C. Remove and Reinstall: Remove items indicated; clean, service, repair, and otherwise prepare them for reuse; store and protect against damage. Make available for Engineer’s inspection. Reinstall items in locations indicated.

D. Existing to Remain: Protect construction indicated to remain against damage and soiling during selective demolition. When permitted by the Engineer, items may be removed to a suitable, protected storage location during selective demolition and then cleaned and reinstalled in their original locations.

1.04 SUBMITTAL

Photographs or videotape, sufficiently detailed, of existing conditions of adjoining construction and site improvements that might be misconstrued as damage caused by selective demolition operations, if any.

1.05 REGULATORY REQUIREMENTS

A. Comply with governing EPA notification regulations before starting selective demolition. Comply with hauling and disposal regulations of authorities having jurisdiction.

B. The City may occupy portions of the building immediately adjacent to selective demolition areas. Conduct selective demolition so that City’s operations will not be disrupted. Provide not less than 72 hours notice to City of activities (if any) that may affect City's operations.

C. City assumes no responsibility for actual condition of facilities or items to be selectively demolished, or removed and reused.

D. Storage or sale of removed items or materials on-site will not be permitted.

PART 2 - PRODUCTS (Not Applicable)

PART 3 - EXECUTION

3.01 Survey the condition of the site to determine whether removing any element might result in undesirable damage of any portion of adjacent facilities during selective demolition.

3.02 Perform surveys as the Work progresses to detect hazards resulting from selective demolition activities.

3.03 Maintain existing utilities indicated to remain in service and protect them against damage during selective demolition operations.

3.04 Utility Requirements: Locate, identify, shut off, disconnect, and seal or cap off indicated utility services serving facilities to be selectively demolished.

A. Where utility services are required to be removed, relocated, or abandoned, provide bypass connections to maintain continuity of service to other parts of the site before proceeding with selective demolition.

3.05 Drain, purge, or otherwise remove, collect, and dispose of chemicals, gases, explosives, acids, flammables, or other dangerous materials (if any) before proceeding with selective demolition operations.

3.06 If directed by the Engineer, employ a certified, licensed exterminator to treat site and to control rodents and vermin before and during selective demolition operations.

3.07 Conduct demolition operations and remove debris to ensure minimum interference with roads, parking lots, streets, walks, and other adjacent occupied and used facilities.

3.08 Conduct demolition operations to prevent injury to people and damage to adjacent buildings, facilities, and site improvements to remain. Ensure safe passage of people around selective demolition area.

3.09 Use water mist and other suitable methods to limit the spread of dust and dirt. Comply with governing environmental protection regulations.

3.10 Remove and transport debris in a manner that will prevent spillage on adjacent surfaces and areas.

3.11 Clean adjacent structures and improvements of dust, dirt, and debris caused by selective demolition operations. Return adjacent areas to condition existing before start of selective demolition.

3.12 Demolish and remove existing construction only to the extent required by new construction and as indicated. Contractor to be responsible for any cutting and patching that is required.

3.13 Promptly patch and repair holes and damaged surfaces caused to adjacent construction by selective demolition operations.

3.14 Where repairs to existing surfaces are required, patch to produce surfaces suitable for new materials.

3.15 Restore exposed finishes of patched areas and extend finish restoration into adjoining construction to remain in a manner that eliminates evidence of patching and refinishing.

3.16 Disposal: Promptly dispose of demolished materials. Do not allow demolished materials to accumulate on-site.

A. Do not burn demolished materials.

B. Transport demolished materials off City's property and legally disposes of them, if not designated to be salvaged by the City or reused.

3.17 In areas where bituminous concrete is to be removed, the edge of any bituminous concrete to remain must be a clean sawcut edge.

3.18 Items to be removed and reset may be stored on site at a location approved by the City. Contractor shall verify this location prior to removal and storing of the materials/items.

END OF SECTION

EARTHWORK

SECTION 02300

PART 1 - GENERAL

1.01 GENERAL PROVISIONS

A. Attention is directed to the CONTRACT AND GENERAL CONDITIONS and all Sections within DIVISION 01 - GENERAL REQUIREMENTS which are hereby made a part of this Section of the Specifications.

1.02 SECTION INCLUDES

A. Cutting, filling, and rough grading the site for site structures, athletic fields and bituminous concrete areas.

B. Excavating trenches for site utilities.

C. Excavating for site structures.

D. Backfilling and compaction.

1.03 RELATED SECTIONS

A. SECTION 02320 – Aggregate Base Course

B. SECTION 02513 – Bituminous Concrete Pavement

1.04 REFERENCES

A. American Society of Testing and Materials

C136 - Sieve Analysis of Fine and Coarse Aggregates

D422 – Particle Size Analysis of Soils

D698 – Laboratory Compaction Characteristics of Soil Using Standard Effort (12,400 ft-lbf/ft^3)

D1556 - Density of Soil in Place by the Sand-Cone Method.

D1557 - Moisture-Density Relations of Soils and Soil-Aggregate Mixtures Using 10 lb. Rammer and 18 inch drop

D2487 – Classification of Soils for Engineering Purposes (Unified Soil Classification System)

D3017 – Moisture Content of Soil and Soil-Aggregate in Place by Nuclear Methods (Shallow Depth)

D4318 - Liquid Limit, Plastic Limit and Plasticity Index of Soils

E329 – Agencies Engaged in Testing and/or Inspection of Materials Used in Construction

E548 – General Criteria Used for Evaluating Laboratory Competence

B. American Association of State Highway and Transportation Officials (AASHTO)

T 191 – Density of Soil In-Place by the Sand Core Method

T 239 – Moisture Content of Soil and Soil-Aggregate in Place by Nuclear Methods (Shallow Depth)

C. MASSACHUSETTS HIGHWAY DEPARTMENT STANDARD SPECIFICATIONS FOR HIGHWAY AND BRIDGES (Latest Edition).

1.05 SUBMITTALS FOR REVIEW

A. The Contractor shall submit soil analysis report from a certified laboratory, for loam and each type of fill for review and approval by the Engineer and/or Owner. Soil Analysis shall include Particle Size Analysis, Liquid Limit and Plasticity Index, Classification according to ASTM D 2487 of each on-site or borrow soil material proposed for fill and backfill, a laboratory compaction curve according to ASTM D 698 for each on-site or borrow soil material proposed for fill and backfill.

B. The Contractor shall submit samples of each type of fill material for review and approval by the Engineer and/or Owner. A 10 lb. sample of each off-site material proposed for use, and of any on-site material when requested by the Engineer shall be submitted for approval.

C. Materials Source: Submit name of imported materials source.

D. Contractor shall submit compaction test results as required under this section.

1.06 QUALITY ASSURANCE

A. Perform Work and materials testing in accordance with the Massachusetts Highway Department Standard Specifications for Highway and Bridges (Latest Edition). All testing shall be the responsibility of the Contractor, and results must be submitted to the Engineer for approval.

1.07 PROJECT RECORD DOCUMENTS

A. Submit under provisions of Section 01700, Project Closeout, a detailed as-built drawing.

B. Accurately record actual locations of utilities by horizontal dimensions, elevations or inverts, and slope gradients.

1.08 FIELD MEASUREMENTS

A. Verify that survey bench mark and elevations of existing utilities are as indicated on the Contract Drawings.

PART 2 - MATERIALS

2.01 SUBSOIL MATERIALS

A. Subsoil Type S1 - Ordinary Borrow: Comply with the Massachusetts Highway Department Standard Specifications for Highways and Bridges (Latest Edition) M1.01.0.

2.02 COARSE AGGREGATE MATERIALS

A. Coarse Aggregate Type A1 All one and one half (1 1/2) inch Crushed Stone: Comply with the Massachusetts Highway Department Standard Specifications for Highways and Bridges (Latest Edition) M2.01.1.

B. Coarse Aggregate Type A2 Gravel Borrow: Comply with the Massachusetts Highway Department Standard Specifications for Highways and Bridges (Latest Edition) M1.03.0 type C. Maximum size of stone in gravel shall be two (2) inches in its largest dimension.

Sieve Size	Percent Passing
1/2 inch	50-85
No. 4	40-75
No. 50	8-28
No. 200	0-10

C. Coarse Aggregate Type A3: Dense Graded Crushed Stone:. Angular crushed washed stone; free of shale, clay, friable material and debris; comply with the Massachusetts State Highway Standard Specifications for Highways and Bridges (Latest Edition) M2.01.7; comply with within the following limits:

Sieve Size	Percent Passing
2 inch	100
1 1/2 inch	70-100
3/4 inch	50 to 85
No. 4	30 to 55
No. 50	8 to 24
No. 200	3 to 10

D. Aggregate Type A4 Structural Fill: Natural stone; washed, free of clay, shale, organic matter; graded in accordance with ASTM D422; within the following limits:

Sieve Size	Percent Passing
6 inch	100
3 inch	70 to 100
3/4 inch	40 to 95
No. 4	30 to 90
No. 10	25 to 80
No. 40	10 to 50
No. 200	0 to 12

E. Coarse Aggregate Type A5 All three quarter (3/4) inch Crushed Stone: Comply with the Massachusetts Highway Department Standard Specifications for Highways and Bridges (Latest Edition) M2.01.4.

2.03 FINE AGGREGATE MATERIALS

A. Fine aggregate Type F1 sand borrowed to be graded as follows:

Sieve Size	Percent Passing
No. 4	100
No. 200	0 to 8

2.04 SOURCE QUALITY CONTROL

A. Testing and Analysis of Soil Material: Perform in accordance with ASTM D1557.

B. If tests indicate materials do not meet specified requirements, change material and retest.

C. Provide materials of each type from same source throughout the Work.

2.05 FIELD QUALITY CONTROL

A. Compaction testing shall be performed by the Contractor in accordance with ASTM D1557 and/or ASTM D2922, as directed by the Engineer or Owner. At a minimum, Contractor shall conduct 4 tests per acre with locations approved by the Engineer.

B. The Contractor shall submit name(s) of testing labs to Engineer for approval prior to testing.

C. If tests indicate materials do not meet specified requirements, remove work, replace and retest.

D. Frequency of tests: As directed by the Engineer and/or Owner.

PART 3 - EXECUTION

3.01 PREPARATION

A. Identify required lines, levels, grades, and datum.

B. Contractor shall contact "Dig-Safe" at 1-888-344-7233 prior to commencement of any activities to demarcate the locations of known utilities.

C. Locate, identify, and protect utilities to remain, from damage.

D. Notify the respective utility companies to remove and relocate utilities as required by the Contract Drawings.

E. Protect above and below grade utilities that remain.

F. Protect plant life, lawns, rock outcropping and other features remaining as a portion of final landscaping.

G. Protect bench marks, survey control point, existing structures, fences, sidewalks, paving, and curbs from excavating equipment and vehicular traffic.

H. Compact subgrade to density requirements for subsequent backfill materials.

I. Cut out soft areas of subgrade not capable of compaction in place. Backfill with Type S1 fill and compact to density equal to or greater than requirements for subsequent fill material.

3.02 TOPSOIL EXCAVATION

A. Strip full depth of topsoil and subsoil from the following areas as required to meet the proposed grades:

1. Under proposed paved areas.
2. Under proposed structures and utilities.
2. Under all areas to be cut or filled.

B. If topsoil material is encountered below the proposed subgrade elevation, the Contractor shall proof roll the area and perform compaction tests on the subject material.

C. Contractor to test stockpiled topsoil for reuse on the site and to obtain required amendments to meet the specification section 02920 - Topsoil. Testing shall be submitted to the Engineer for Approval.

3.03 SUBSOIL EXCAVATION

A. Excavate subsoil to accommodate paving, site structures, and athletic facilities to achieve the grades indicated on the Contract Drawings.

B. Compact disturbed load bearing soil in direct contact with foundations to original bearing capacity; perform compaction in accordance with this Section.

C. Slope banks with machine to grades as depicted on the drawings.

D. Grade top perimeter of excavation to prevent surface water from draining into excavation.

E. Hand trim excavation. Remove loose matter.

F. Remove lumped subsoil, boulders, and rock up to two (2) cu yd measured by volume. Larger material will be considered rock removal.

G. Notify Engineer and/or Owner of unexpected subsurface conditions and discontinue affected Work in area until notified to resume work.

H. Correct areas over excavated in accordance with Backfilling requirements in this Section.

I. Stockpile excavated material in area designated by the Engineer and/or Owner; remove excess or unsuitable material from site.

3.04 DEWATERING

A. The Contractor shall dewater the excavation, if required, on-site by methods approved by the Owner and Engineer.

B. Dewatering methods could include drainage ditches, sumps and open pumping.

C. The Contractor shall provide equipment capable of pumping the anticipated groundwater flows.

3.05 STOCKPILING

A. Stockpile materials on-site at locations designated by Engineer and/or City of Newton .

B. Stockpile in sufficient quantities to meet Project schedule and requirements.

C. Direct surface water away from stockpile site to prevent erosion or deterioration of materials.

D. Stockpile in area designated on-site, by Engineer and/or the Owner, to a depth not exceeding fifteen (15) feet and protect from erosion. Contractor shall install haybales around the perimeter of all topsoil and subsoil stockpiles.

3.06 STOCKPILE CLEANUP

A. Remove stockpile, leave area in a clean and neat condition. Grade site surface to prevent free standing surface water.

B. If a borrow area is indicated, leave area in a clean and neat condition. Grade site surface to prevent free standing surface water.

3.07 TRENCHING

A. Do not interfere with 45 degree bearing splay of foundations.

B. Hand trim excavation. Hand trim for bell and spigot pipe joints. Remove loose matter.

C. Remove lumped subsoil, boulders, and rock up to two (2) cu yd, measured by volume.

D. Correct areas over excavated in accordance with Backfilling requirements of this Section.

E. Stockpile excavated material in area designated on-site and remove excess material not being used, from site.

F. Pursuant to M.G.L. Chapter 82A: 1, 520 CMR 7.00 and 520 CMR 14.00, also in accordance with “Summary of 1926 Subpart P – OSHA Excavation Standard”, the Contractor is responsible for the filing of and fully meeting the conditions of the newly adopted trench permit.

3.08 EXISTING SUBGRADE PREPARATION

A. Compact existing subgrade to density requirements for subsequent backfill materials.

B. Existing subgrade must be approved by the Engineer prior to any regrading.

C. Cut out soft areas (unsuitable material) of subgrade not capable of compaction in place or as required by the engineer. Backfill with Type S1 fill and compact to density equal to or greater than requirements for subsequent fill material. Contractor shall assume removal of 1,500 cubic yards of unsuitable material.

3.09 BACKFILLING

A. Backfill areas to grades and elevations, depicted on the Contract Drawings, with unfrozen materials.

B. Systematically backfill to allow maximum time for natural settlement. Do not backfill over porous, wet, frozen or spongy subgrade surfaces.

C. Type A Granular Materials: Place and compact materials in equal continuous layers not exceeding six (6) inches compacted depth.

D. Type S Soil Materials: Place and compact material in equal continuous layers not exceeding six (6) inches compacted depth.

E. Employ a placement method that does not disturb or damage other work.

F. Maintain optimum moisture content of backfill materials to attain required compaction density.

G. Make gradual grade changes. Blend slope into level areas.

H. Leave fill material stockpile areas free of excess fill materials.

I. Remove surplus materials from site.

3.10 GRADING

A. Materials cut from site are to be approved by the Engineer to be reused on the site. Materials approved for reuse are to be screened and stockpiled on the site as necessary to complete the job. All excess materials to be removed from the site.

B. Fill areas to grades and elevations, depicted on the Contract Drawings, with approved unfrozen materials.

C. Final grading within athletic field areas, prior to root zone placement shall be performed via laser guided machines.

3.11 TOLERANCES

A. Top Surface of Proposed Subgrade: Plus or minus ½-inch from finished elevations.

B. Top Surface of Backfilling Under Paved Areas: Plus or minus one half (1/2) inch from required elevations.

C. Top Surface of General Backfilling: Plus or minus one (1) inch from required elevations.

3.12 FIELD QUALITY CONTROL

A. Compaction testing will be performed in accordance with ASTM Dl557 and alternatively with ASTM D2922 at a frequency as required in the Massachusetts Highway Department Standard Specifications For Highway And Bridges (Latest Edition) or as requested by the Engineer.

B. If tests indicate Work does not meet specified requirements, remove Work, replace and retest.

C. Proof roll compacted fill surfaces under areas to be paved.

D. All surfaces to be graded to not allow for ponding of water. All surfaces must be graded to freely drain into a drainage system.

3.13 PROTECTION OF FINISHED WORK

A. Reshape and re-compact fills subjected to vehicular traffic.

B. Prevent displacement of loose soil from falling into excavation; maintain soil stability.

C. Protect bottom of excavations and soil adjacent to and beneath foundation from freezing.

3.14 FILL SCHEDULE

Below is an anticipated fill schedule for Scope of Work elements. The Contractor shall consult manufacturer's minimum installation requirements and follow in detail. In a case where manufacturer's recommendations vary from the following fill schedule, the manufacturer's recommendations shall be become the required installation guidelines.

A. Fill Surrounding non-perforated Drainage Piping and Water Piping:

1. Fill Type A2 from a minimum of 4-inches below the pipe to the midpoint of the drain pipe compacted to 95 percent maximum density at optimum moisture content.

B. Fill Over non-perforated Drainage Piping and Water Piping:

1. Fill Type S1 to the elevations as indicated on the Contract Drawing, compacted to 95 percent.

C. Fill Under Grass Areas:

1. Fill Type S1, to six (6) inches below finish grade, compacted to 90 percent maximum density at optimum moisture content.

D. Fill Under Asphalt Paving:

1. Fill Type A3 below bottom of base coarse pavement elevation, to depth shown on details, compacted to 95 percent maximum density at optimum moisture content.

E. Fill Under Concrete slabs:

1. Fill Type A4 below bottom of concrete elevation, to depth shown on details, compacted to 95 percent maximum density at optimum moisture content.

F. Fill Under utility structures and electrical conduit:

1. Fill Type A2 below bottom of structures and conduit elevation, to depth shown on details, compacted to 95 percent maximum density at optimum moisture content.

G. Fill around perforated drainage pipes (trench drains):

1. Fill Type A5 from a minimum of 6" below bottom of pipe elevation to 8" below proposed grade. Stone shall be washed and wrapped with approved filter fabric.

E. Fill-to Correct Over-excavation:

1. Fill Type S1, brought to required finished elevations, compacted to 95 percent maximum density at optimum moisture content.

END OF SECTION

G:\713050\specs\Div 2\02300-Earthwork.doc

AGGREGATE BASE COURSE

SECTION 02320

PART 1 - GENERAL

1.01 GENERAL PROVISIONS

A. Attention is directed to the CONTRACT AND GENERAL CONDITIONS and all Sections within DIVISION 01 - GENERAL REQUIREMENTS which are hereby made a part of this Section of the Specifications.

1.02 SECTION INCLUDES

A. Aggregate base course for placement under proposed paving (as necessary).

1.03 RELATED SECTIONS

A. Examine Contract Documents for requirements that affect work of this Section. Other Specification Sections that directly relate to work of this Section include, but are not limited to:

1. Section 02300 – Earthwork
2. Section 02513 – Bituminous Concrete Pavement

1.04 REFERENCES

A. ASTM D1557 - Test Methods for Moisture-Density Relations of Soils and Soil-Aggregate Mixtures Using 10 lb Rammer and an 18 inch Drop.

B. ASTM D2922 - Test Methods for Density of Soil and Soil-Aggregate in Place by Nuclear Methods (Shallow Depth).

C. MASSACHUSETTS HIGHWAY DEPARTMENT STANDARD SPECIFICATIONS FOR HIGHWAY AND BRIDGES (Latest Edition).

PART 2 - PRODUCTS

2.01 MATERIALS

A. Structural Fill As specified in Section 02300.

PART 3 - EXECUTION

3.01 EXAMINATION

A. Verify substrate has been inspected, gradients and elevations are correct, and is dry.

3.02 PREPARATION

A. Correct irregularities in substrate gradient and elevation by scarifying, reshaping, and re-compacting.

B. Do not place fill on soft, muddy, or frozen surfaces.

3.03 AGGREGATE PLACEMENT

A. Spread structural fill over prepared substrate to a total compacted thickness as specified on drawings.

B. Place aggregate in maximum six (6) inch layers compact to specified density.

C. Level and grade surfaces to elevations and gradients indicated on the Contract Drawings.

D. Add small quantities of fine aggregate to coarse aggregate as appropriate to assist compaction.

E. Add water to assist compaction. If excess water is apparent, remove aggregate and aerate to reduce moisture content.

F. Use mechanical tamping equipment in areas inaccessible to compaction equipment.

3.04 TOLERANCES

A. Flatness: Maximum variation of 1/4 inch measured with 10 foot straight edge.

B. Scheduled Compacted Thickness: Within 1/4 inch.

C. Variation From Design Elevation: Within 1/4inch.

3.05 FIELD QUALITY CONTROL

A. Compaction testing will be performed in accordance with ASTM Dl557 and alternatively with ASTM D2922 at a frequency as requested by the Engineer or City.

END OF SECTION

G:\713050\Specs\newton so hs_complete spec.doc

BITUMINOUS CONCRETE PAVEMENT

SECTION 02513

PART 1 - GENERAL

1.01 GENERAL PROVISIONS

A. Attention is directed to the CONTRACT AND GENERAL CONDITIONS and all Sections within DIVISION 01 - GENERAL REQUIREMENTS which are hereby made a part of this Section of the Specifications.

1.02 DESCRIPTION

A. Work Included: Work under this section includes the installation of bituminous concrete pavement. All existing pavement damaged or displaced as a result of the construction operations shall be restored in accordance with the requirements for this Section.

B. Related Work Specified Elsewhere:

1. Section 02300 – Earthwork
2. Section 02320 – Aggregate Base Course

1.02 QUALITY CONTROL

A. Submittals: Refer to Section 01300 - Submittals. Include data showing gradation and composition of materials proposed. Product pavement slips to include all material by percentage and weight.

B. Conformance: Massachusetts Highway Department Standard Specifications for Highways and Bridges (latest edition).

PART 2 - PRODUCTS

2.01 BANK OR CRUSHED GRAVEL

A. Conform to Standard Specifications, subsection M1.03.1.

2.02 MINERAL AGGREGATE

A. Conform to subsection M3.11.04 of the Standard Specifications.

2.03 BITUMINOUS MATERIALS

A. Bituminous material shall conform to Subsection M3.11.00 of the Standard Specifications.

B. Proportioning of Bituminous Concrete Mixture: The bituminous concrete mixture shall contain from 5.0 to 6.0 percent by weight of bitumen and from 94.0 to 95.0 percent by weight of mineral aggregates. The percentage of bitumen used shall be as directed within the limits specified.

2.04 BITUMINOUS CONCRETE BINDER COURSE

A. Standard Specifications subsection M 3.11.

2.05 BITUMINOUS TACK COAT

A. Standard Specifications subsection M3.03.0

2.06 BITUMINOUS CONCRETE WEARING COURSE

A. Standard Specifications subsection M 3.11.

PART 3 - EXECUTION

3.01 SUB-GRADE PREPARATION

A. Subgrade preparation is in accordance with Section 02300.

3.02 GRAVEL BASE PLACEMENT

A. Gravel placement in accordance with Section 02320 or Section 02300.

3.03 BITUMINOUS CONCRETE BINDER COURSE

A. On the approved base course shall be provided a plant mixed bituminous concrete binder course in compacted thickness as shown on the plans. The bituminous concrete binder course shall be provided in accordance with the applicable requirements of Massachusetts Standard Specifications Section 420, Subsection 420.40 and Section M.3.11 for "Materials", and Subsection 420.60 for "Construction Methods". Surface of the binder course as thus compacted shall not vary more than one-quarter inch (1/4”) in ten feet (10’) measured in any direction.

3.04 BITUMINOUS CONCRETE WEARING COURSE

A. Place bituminous concrete Class I-1 (Hot-Mix) pavement in 1 course. The course shall have a compacted thickness as shown on the plans. The finished pavement surface shall conform to the proposed slope and shall not vary more than one-eighth inch (1/8) in ten feet (10’) measured in any direction. The Contractor will not be allowed to correct areas of pavement failing to meet this specification by patching or use of filters. Deficient asphalt areas shall be removed and repaved to an extent approved by the Engineer.

B. The permanent bituminous concrete pavement surface courses shall be provided in accordance with details and the applicable requirements of Massachusetts Standard Specifications Section 460, Subsection 460.40 and Section M.3.11 for "Materials" and Subsection 460.60 for "Construction Methods". The surface shall be rolled free of any roller marks, ridges, and voids, and shall be repaired if directed.

END OF SECTION

G:\713050\Specs\newton so hs_complete spec.doc

SYNTHETIC FIELD SURFACING

SECTION 02532

PART 1 – GENERAL

1.01 GENERAL PROVISIONS

A. Attention is directed to the CONTRACT AND GENERAL CONDITIONS and all Sections within DIVISION 01 - GENERAL REQUIREMENTS which are hereby made a part of this Section of the Specifications.

1.02 GENERAL REQUIREMENTS

It is the intent of the specification to provide a durable, proven monofilament synthetic turf system installed by experienced crews under the direct supervision of an experienced foreman/superintendent. As a result, the following minimum requirements must be met by all turf systems to be favorably considered:

A. The synthetic turf supplier/installer shall be performed by a company which has been in business continuously for a period of a minimum of five (5) years under the same name and ownership and with at least five (5) years experience in the supply and installation of the type of materials specified herein on projects of comparable size to this Project.

B. The synthetic turf supplier/installer must have completed a minimum of three (3) outdoor installations, each in excess of 80,000 S.F. in New England, incorporating the same monofilament infilled synthetic turf system proposed for this project.

C. The synthetic turf supplier/installer must have completed a minimum of ten (10) outdoor installations, each in excess of 80,000 S.F. in New England, incorporating a tufted polyethylene infilled turf system.

D. The crew foreman shall have installed at least ten (10) similar filled turf installations.

E. The Turf Supplier/Installer shall submit a list of previously installed projects and crew and foreman qualifications for the Owner's review prior to award that demonstrates compliance with the minimum requirements of this section, Part 1, Paragraph A-D.

F. The General Contractor must coordinate all work items with the Turf Supplier/Installer.

1.03 DESCRIPTION OF WORK

A. Provide equipment and materials, and do work necessary to construct the filled synthetic turf field surfacing, with permeable gravel base, inlaid sports field lining as indicated on the Drawings, and as manufactured and installed by one (1) of the following, or approved equal:

PowerBlade HP 2.5 as manufactured by Sportexe,
A-Turf Mono – RS 50/2.5 as manufactured by A-Turf, with Thilon Extreme MF Fiber.
FieldTurf ProSeries Duraspine Monofilament as manufactured by FieldTurf Tarkett.
Ultrablade M as manufactured by Sprinturf.

Regardless of the turf system selected, each turf supplier/installer will meet or exceed the requirements of this specification related to performance and qualifications.

Work shall include but shall not be limited to:

1. Stable, permeable finished crushed stone/aggregate base.
2. Synthetic surface including all surface inlay and related finish work.

B. All painted lines as detailed in this specification, must include seasonal (spring and fall) re-striping throughout the eight (8) year warranty.

1.04 RELATED WORK

A. Examine Contract Documents for requirements that affect work of this Section. Other Specification Sections that directly relate to work of this Section include, but are not limited to:

1. Section 02300 – Earthwork

2. Section 02620 – Drainage System
3. Section 03300 – Cast-in-Place Concrete

1.05 REFERENCES

A. Comply with applicable requirements of the following standards. Where these standards conflict with other specified requirements, the most restrictive requirement shall govern.

1. American Society for Testing and Materials (ASTM):

D 1557 Laboratory Compaction Characteristics of Soil Using Modified Effort (56,000 ft-lbf/cu.ft (2,700 KN-m/cu.m.))

F 355A Shock Absorbing Properties of Playing Surface Systems and Materials.

D 5034 Grab Breaking Strength

D 418 Pile Height, Tuft Spacing, Face Weight and Total Weight

D 2859 Flammability (Pill test)

F 1551 Shoe Traction

F 1551 Water Permeability

F 1015 Abrasive Index

1.06 SUBMITTALS

A. Shop Drawings

1. The Turf Supplier/Installer shall submit a shop drawing seaming plan indicating all turf panels by number and how they are to be seamed, by type seam and location, in the field.

2. The Turf Supplier/Installer shall submit a shop drawing striping and marking plan indicating all event markings, stripes, logos, and other markings to be incorporated into the carpet. It will be accompanied by a certification that all markings meet the requirements of the governing body for the intended sport (e.g., MIAA football).

B. Samples

Samples: Submit duplicate samples of each synthetic field surfacing, infill components, and finished crushed stone/aggregate base in a 24 in. x 12 in tray.

C. Manufacturer's Review

1. Submit written statement, signed jointly by General Contractor and synthetic field surfacing supplier/installer stating that the Drawings and Specifications have been reviewed by qualified representatives of the material manufacturer, and that they are in agreement that the materials and system, including drainage, to be used for synthetic field surfacing are proper and adequate for the applications shown.

2. The synthetic turf supplier/installer shall submit at the pre-construction conference a certificate stating that it is not aware of any aspects of the proposed turf system to be installed which knowingly violate any patented materials or methods and that the manufacturer fully indemnifies the **Owner** and Engineer from any liability arising out of any issue related to patent infringement.

D. Manufacturer's Data

Submit manufacturer's specifications and installation instructions for all products in the synthetic field surfacing system, including certifications and other data as may be required to show compliance with the Contract Documents.

E. Substrate Acceptability

Submit a certified statement issued by the synthetic field surfacing materials Supplier/Installer, attesting that all areas and surfaces designated to receive synthetic field surfacing have been inspected and found satisfactory for the reception of the Work covered under this Section; and are not in conflict with the "Guarantee" requirements. Installation of synthetic field surfacing materials may not commence until final acceptance of finished crushed stone/aggregate base has been received by the Engineer.

F. Statement of Supervision

Upon completion of the Work, submit a written statement signed by the Synthetic Turf Supplier/Installer stating that the field supervision of the manufacturer's representative was sufficient to insure proper application of the materials, that the Work was installed in accordance with the Contract Documents, and that the installation is acceptable to the manufacturer.

G. Sieve Analysis

Sieve analysis of all delivered soil materials, and base aggregates and infill materials shall be provided to the Engineer for review and approval.

H. Synthetic Turf Supplier/Installer shall provide a written statement indicating that their product as manufactured for the Newton South High School Project will not exceed the Consumer Product Safety Commission's standards for products exposed to children.

1.07 QUALITY ASSURANCE

A. Finished crushed stone/aggregate base work shall be done only after excavation and construction work which might damage it has been competed. Damage caused during construction shall be repaired before acceptance of base.

B. Provide test results from certified laboratory certifying capability of aggregate base course to meet permeability and stability requirements before synthetic turf installation. Testing laboratory qualifications shall be submitted for approval by the Engineer.

C. Lay test strip and establish compaction and density rates for each course with nuclear gauge before beginning permanent work.

D. The synthetic field surfacing manufacturer shall provide evidence indicating that the specified materials have been successfully utilized on work of similar scope to that shown and specified for this Project.

E. The synthetic turf carpet supplied as part of the synthetic turf installation shall have been fabricated within six (6) months of the turf installation.

1.08 GUARANTEE

A. The Synthetic Turf Supplier/Installer shall provide a written guarantee stating that all work executed under this section will be free from defects of material and workmanship for a period of eight (8) years from date of Substantial Completion, and that any defects will be remedied on written notice at no additional cost to the

Owner. The warranty shall be in writing and shall be signed by the Installer and synthetic field surfacing materials manufacturer. Guarantee shall include removal and replacement of materials as required, to repair synthetic field surfacing at no cost to the Owner. This warranty shall not be pro-rated, rather it shall provide for the full replacement value of defective aspects of the installation throughout the life of the warranty.

In addition to the manufacturer's/installer's warranty described above, the synthetic turf manufacturer will provide the Owner with a third party insurance policy acceptable to the Owner, pre-paid for a full eight (8) years and not-cancelable, issued in the name of the Owner, by a US Insurance company rated B+ or better, which provides the same warranty coverage established above, in the event that the turf manufacturer is unable or unwilling to provide the specified coverage. A copy of the policy will be required prior to award of the contract and an executed policy in the Owner's name will be required prior to final payment.

The synthetic field surfacing materials supplier/installer shall provide (arrange and pay for) G-Max testing on the installed surface prior to acceptance and it shall be repeated at one year intervals throughout the turf manufacturer's guarantee period at no additional cost. Testing shall be performed in accordance with ASTM F-355-Method A, by an independent materials testing laboratory certified to perform this test and subject to the approval of the Engineer. "In-house" laboratories with a business affiliation to the turf manufacturer and/or installer are unacceptable. Over the life of the warranty, changes in the average G-Max that exceed +15% of the original installed system shall be remedied by the synthetic field surfacing Supplier/Installer within 30 days of the deficient test result.

1.09 FOLLOW-UP VISITS

A. The Turf Manufacturer/Installer shall include in their price, two (2) follow-up visits at six month (6 mo.) intervals after the Final Turf Inspection date. The visits shall be scheduled by the Owner or Engineer to inspect the condition of the synthetic turf, infill material, seams, painted lines, anchorage, and peripheral attachments. Items found to require repair, amendment, or replacement shall be the responsibility of the Turf Manufacturer/Installer. Repairs, except those required due to vandalism, shall take place immediately upon notification by the Engineer.

PART 2 - PRODUCTS

2.01 PRECAST CONCRETE ARTIFICIAL TURF ANCHORING SYSTEM

A. Precast concrete anchoring system shall be in accordance with the details provided in the construction plans.

2.02 SYSTEM COMPONENTS

The turf system consists of the following components:

1. A vertical draining base of crushed stone consisting of a permeable layer of crushed aggregate topped by a permeable finishing course of finer crushed aggregate.

2. A synthetic turf carpet consisting of nominal 2½" long polyethylene monofilament fiber, regardless of the turf system to be installed, tufted into a permeable double-layered primary backing with a secondary backing. The carpet is installed directly on the crushed stone base.

3. An infill system consisting of a mixture comprised of selected and graded dust-free silica sand and specially treated and mixed ground rubber. The infill material fills the voids between the fibers allowing the fibers to remain vertical and non-directional. The infill is installed so as to leave approximately ¾" of the tufts clear of the top of the infill.

2.03 PREPARATION OF THE SOIL BED

A. A soil test is required on the intended surface to be covered by the synthetic turf. These tests must provide the following information:

a) *Permeability and/or hydraulic conductivity of drainage base (Lab)*
b) *Percolation rate of base (in-situ)*
c) *Moisture content at the time of the test*

d) *Sieve analysis and plasticity limits determination test (lab)*
e) *In-situ compaction (measured)*
f) *Any external features that could affect the drainage characteristics of the field. Surrounding slopes and conditions that could bring additional water to the field in question.*

B. All topsoil, organic, and non-compactable materials shall be stripped, hauled, and disposed of. If material is encountered below sub-grade elevations that does not meet the compaction requirements, the Contractor must notify the Engineer immediately prior to excavation of in-situ material.

C The soil bed must have a minimum slope of 1%.

D. The soil bed must be compacted in both directions to attain the specified compaction rate which is 95% standard Proctor.

E. The soil bed must be prepared to tolerances of not more than 1/4" in 10' from the nominal height to allow for even drainage. Laser grading is recommended.

F. A pervious geotextile fabric shall be installed to cover the soil bed in accordance with installation details.

2.04 BASE STONE

A. The crushed stone must be laid without damaging the soil bed. It is very important to not create any depressions with heavy equipment. The specified stone or aggregate supplied must conform to the turf manufacturer's recommended specifications, as well as this specification. The finished crushed stone or aggregate base supplied must be stable and sufficiently permeable to ensure all-weather availability of the field.

B. The base shall be constructed in two (2) or more layers or lifts of approximate equal thickness. Each layer must be compacted in both directions to attain the specified compaction rate.

The finished crushed stone base must be sloped 0.5% from the center longitudinal axis towards the sidelines or as specified.

The finished crushed stone base surface of the leveling course shall not vary from the specified grade by more than ¼" in 10' when measured in any direction.

Aggregate base beneath final grade shall be a graded, granular, non-frost susceptible, free-drainage material, consisting of either durable stone and coarse sand blends practically free from loam and clay **fines**, and which can be readily compacted to form a stable foundation, graded as follows:

Sieve Size	% Passing by Weight
1 in.	100
3/4 in.	85-100
3/8 in.	50-80
No. 4	35-60
No. 10	25-50
No. 40	15-30
No. 200	0-3

2.05 FINAL GRADE

A. The final grade aggregate layer should not be more than 1" thick.

B. The base under the final grade must be compacted (95% of the maximum density determined by ASTM D-1557) in both directions according to the specifications, and meet the following gradation requirements:

Sieve Size	% Passing by Weight
½"	100
3/8"	85-100

No. 8		35-75
No. 16		10-55
No. 30		0-40
No. 50/60		0-15
No. 100	0-8	
No. 200	0-2	

C. The final grade material must be sloped 0.5% from the center longitudinal axis towards the side lines unless otherwise specified. Flat fields can be designed according to local conditions. This layer must be graded using a dual-laser guided fine grading system.

2.06 TURF SYSTEM COMPONENT MATERIALS

A. Carpet

Fiber: a low friction blended polyethylene monofilament fiber. It has the following properties:

ASTM		Property	Specifications
D1577	Denier (min.)	8000 nominal	
D418		Pile Height (min.)	2 ½" nominal
D418		Pile Weight (min.)	33 oz./sq. yd.

Face Yarn Type: Extruded monofilament polyethylene fiber with a lead content less than or equal to .04 mg/l. For determination of the concentration of lead 100g of a sample pieces shall be extracted for 24h in a bottle with 1000ml of CO2 injected de-ionized water (sample to water 1:10, about 50ml CO2/min). The extract is filtered through a glass filter (acid washed 0.3 – 1um) (1st extract). The same pieces are then extracted a second time for another 24h (2. extract: 24-48h; so-called acid 48h extract) and filtered. The bottle is shaken during the extraction process in order to get rid of stuck gas bubbles.

For evaluation for the concentration of lead of the 2nd extraction are used.

Yarn size: 7,500 – 10,000 denier (8 ends/1250 denier per end)
Yarn Thickness: 100 microns
Pile Height (Finished): 2.5 inches (63.5 mm)
Color: Green
Construction: Broadloom tufted
Tufting Gauge: 3/8"-3/4"
Primary Backing: polypropylene, polyester and fiber backing
Secondary Backing: 20 oz/sy urethane
Total Product Weight: 78 oz/sy (+/- 2 oz)
Finished Roll Width: 15 feet (4.6 m)
Finished Roll Length: Up to 240 feet (73 m)
Perforation (Outdoors): 3/16" (4.8 mm) holes on staggered 4" (102 mm)
Permeability: 16" (508 mm) +/- per hour (w/infill in place)

1. Primary backing: is double-layered UV-treated woven polypropylene, weighing approximately 8 oz./sq. yd.

2. Secondary backing: is a permeable application of high quality latex, heat activated to lock the fiber tufts into the primary backing materials.

B. Infill

1. Silica sand within the infill mix, 45% to 55% by weight, will meet the following size distribution:

U.S. (Mesh)	Metric (mm)	% Retained per sieve
16	1.190	0
20	0.840	0-3
25	0.710	10-30
30	0.590	30-50
35	0.500	15-35
40	0.420	5-15
50	0.297	<5
70	0.210	Trace

2. Sand will consist of uniform, sub-angular to rounded, single grains. **It will be dust free**, and unground. Crusher fines are unacceptable.

3. Rubber crumb within the infill mix will meet the following size distribution:

U.S. (Mesh)	Metric (mm)	% Passing	% Retained
12	1.680	100	0
14	1.410	96-100	0-5
16	1.190	82-100	0-15
20	0.840	30-66	30-80
30	0.590	0-24	20-50
40	0.420	0-4	5-20
50	0.297	0	0-5
60	0.250		0

2.07 FIELD MARKING

A. Tufted and inlaid lines: shall be in colors as specified in the drawings and meet the above material specifications. Height of all inlaid lines shall be exactly equal to that of the installed turf. Lines shall be tufted into the fabric to the extent possible and remaining shall be field inlaid. Provide all field lines and logos as indicated.

B. Marking Paint: shall be in conformance with NFHS and MIAA regulations, specifically formulated to be compatible with synthetic field surfacing. The contractor must submit a final striping plan for approval by the Owner and Engineer prior to painting of the synthetic turf fields.

C. Fibers shall be pigmented with non-lead based pigments.

2.08 MAINTENANCE EQUIPMENT – FIELD GROOMER

A. The Contractor shall provide a Field Groomer for routinely brushing the field, which shall be a single unit of putting green quality. Drag-type broom unit shall be equivalent to "Greens Keeper" as manufactured by Broyhill Company, Dakota City, NE 68731-0475, (402) 987-3412 or "Greens Groomer" as distributed by Barney Pro Turf Services, Inc., Belle Vernon, PA (724) 929-2111 or approved equal. Prior to final payment on turf installation, the turf manufacturer shall train the Owner's maintenance personnel on the routine maintenance practices for the synthetic turf field.

PART 3 - EXECUTION

3.01 GRADING

A. Areas to be placed with turf will be compacted and brought approximately to subgrade elevation under Section 02300 - Earthwork before work of this section is performed. Final fine grading, filling, and compaction of subgrade to receive turf, as required to form a firm, uniform, and accurate subgrade at required elevations and to required lines, shall be done under this Section.

B. Subgrade of areas to be surfaced with synthetic turf shall be recompacted as required to bring top 9 in. of material immediately below gravel base course to a compaction of at least 90% of maximum density, as determined by ASTM D 1557, Method D. Subgrade compaction shall extend for a distance of a least 1 ft. beyond turf edge.

C. Excavation required in gravel subgrade shall be completed before fine grading and final compaction of subgrade are performed. Where excavation must be performed in completed subgrade, subsequent backfill and compaction shall be performed as specified in Section 02300 - Earthwork. Completed subgrade after filling such areas shall be uniformly and properly graded.

D. Areas being graded or compacted shall be kept shaped and drained during construction. Ruts greater than or equal to 2 in. deep in subgrade, shall be graded out, reshaped as required, and recompacted before placing gravel base course.

E. Materials shall not be stored or stockpiled on subgrade.

F. Disposal of debris and other material excavated and/or stripped under this section, and material unsuitable for or in excess of requirements for completing work of this Section shall conform to the following:

1. Material shall be legally disposed of off-site.

G. Prepared subgrade will be inspected by the Turf Manufacturer's representative. Subgrade shall be approved by the Engineer before installation of gravel base course. Disturbance to subgrade caused by inspection procedures shall be repaired under this Section of the specification.

3.02 AGGREGATE BASE COURSE

A. Aggregate base course for surfacing and the spreading, grading, and compaction methods employed shall conform to standard requirements for usual base course of this type for first class road work.

B. Completion of aggregate base course shall be to 95% of maximum density as determined by ASTM D 1557, Method D. Stone greater than 1 in. shall be excluded from course.

C. Width of base course shall be greater than or equal to the width of turf surface, if continuous lateral support is provided during rolling, and shall extend at least two (2) x base thickness beyond edge of the course above, if not so supported.

D. Aggregate material shall be applied in lifts less than or equal to 6 in. thick, compacted measure. Each lift shall be separately compacted to specified density, using a 6 ton steel wheel roller or vibratory roller equivalent to a 6-ton static roller, or an approved equivalent.

1. Material shall be placed adjacent to structures only after they have been set to required grade and level.

2. Rolling shall begin at sides and progress to center of crowned areas, and shall begin on low side and progress toward high side of sloped areas. Rolling shall continue until material does not creep or wave ahead of roller wheels.

3. Surface irregularities which exceed 1/4 in. measured by means of a 10 ft. long straightedge shall be replaced and properly compacted.

E. Subgrade and base course shall be kept clean and uncontaminated. Less select materials shall not be permitted to become mixed with gravel. Materials spilled shall not be permitted to become mixed with gravel. Materials spilled outside specified lines shall be removed and areas repaired.

F. Portions of subgrade or of construction above which become contaminated, softened, or dislodged by passing of traffic, or otherwise damaged, shall be cleaned, replaced, and otherwise repaired to conform to the requirements of this specification before proceeding with next operation.

G. The subgrade shall be inspected by Contractor by means of a laser level on a 10-foot grid pattern. Based on Contractor's inspection of the topographical survey, the Contractor shall fine grade the subgrade suitably, including properly rolling and compacting the base. Contractor shall not approve the subgrade for tolerance to grade without obtaining a topographic survey.

H. The Contractor shall verify that the subsurface drainage system is functioning properly prior to the commencement of the Infilled Synthetic Turf System installation by thoroughly flooding the field in a minimum of three (3) areas and verifying and recording flow from the drainage system outlet. This can also be accomplished by recording a naturally occurring rain event with greater than ½" of rainfall.

3.03 SYSTEM CHARACTERISTICS

A. Permeability (to ASTM D 4491): The system, turf and base, shall allow a minimum percolation rate of sixteen (16) inches per hour.

B. Relative Abrasiveness (to ASTM F 1015): The system has an Abrasiveness Index of 20.2.

C. Shock Absorbency (to ASTM F 355): Immediately upon substantial completion, the Contractor shall arrange for shock absorbency testing by a certified laboratory subject to approval by the Engineer in accordance with ASTM F 335-Method A. Testing will be performed at a minimum of ten locations selected by the Engineer. The average G-max value at installation shall be between 110 and 140. The Contractor, prior to acceptance, shall remedy an average G-max value outside this range, or individual reading more than 10% outside this range. Satisfactory G-max testing shall be a fixed requirement for final payment of the synthetic turf installation and release of retainage.

Over the life of the guarantee, the Turf Supplier/Installer shall arrange and pay for annual re-testing of the field using the same procedure, within 30 days (±) of the anniversary of the original test date. The Turf Supplier/Installer shall take whatever action is required to remedy any average G-max value greater than 15% of the average value at installation, and to remedy any areas with individual readings over 160. These costs will be included in the turf unit price proposal.

3.04 SYNTHETIC FIELD SURFACING

A. Synthetic field surfacing shall be installed by crews employed by the synthetic field surfacing manufacturer, in strict accordance with manufacturer's recommendations and instructions including but not limited to fabric, adhesives, seaming tape, sewing line, and abutting adjacent materials.

B. All turf seams shall be sewn with a double-locked stitch. Glued seams may be permitted following review of gluing methods and materials by the Engineer. Glued seams shall be backed with seam tape. Seams shall be combed to ensure that threads are not exposed, but are hidden within the nap.

3.05 SYNTHETIC FIELD SURFACING – GENERAL

A. Prior to the installation of turf, the contractor shall have surveyed the area to be covered and the longitudinal & lateral center lines and perimeter edge lines shall be located, marked, and staked 5 ft. outside of the actual limits of the turf surface.

B. After acceptance of the constructed Base, the carpet is laid out on the site and consecutive panels are sewn together at the seams using the latest state-of-the-art procedures approved by the Supplier.

C. Seams will be sewn only with thread approved by the Supplier.

D. The infill, of ground rubber and selected graded silica sand, is to be approved by the Supplier, and will be inserted according to the Supplier's approved procedures by qualified installers.

E. The bristles of any brooms used, either during the original installation, or in subsequent maintenance, shall be of nylon only, shall under no circumstances include any metal, and must be approved by the Supplier.

F. Installation Limitations

1. Installation shall not proceed when:

a. Ambient air temperature is below forty (40°) degrees Fahrenheit (F).

b. Material temperature is below forty (40°) degrees Fahrenheit (F).

c. Rain is falling or pending, unless acceptable to qualified installers.

d. Conditions exist, or are pending, that will be unsuitable for the installation of the system.

G. Lining of synthetic field shall be completed as follows:

1. Field A (near Brandeis Road)

1) Soccer – yellow – Inlaid

2) Football – white – no hashmarks or numerals - inlaid

3) Boy's lacrosse – navy blue – inlaid

4) Girl's lacrosse – color to be chosen by AD – painted

2. Field B (track)

1) Soccer – yellow – inlaid

2) Football – white – hashmarks, numerals and logo – inlaid

3) Boy's lacrosse – navy blue – inlaid

4) Field Hockey – color to be chosen by AD – painted

5) Mid Field Logo – navy blue, orange and white (final colors to be approved by Scott Perrin _ Newton South Athletic Director.

H. Where fields are indicated to be painted, the synthetic turf installer/supplier shall re-stripe the field once per season (i.e. girl's lacrosse in spring and field hockey in fall), annually, throughout the 8-year warranty period.

3.06 PROTECTION

A. Installer shall advise the Contractor of procedures required for protection and maintenance of finished synthetic field surfacing during remainder of construction period so that surfacing will be undamaged at time of acceptance.

B. Upon completion of the synthetic field surface, the General Contractor shall be responsible for protection of the field surface for the remainder of the Contract, unless the Owner takes beneficial occupancy prior to contract completion.

END OF SECTION

G:\713050\Specs\newton so hs_complete spec.doc

SYNTHETIC TRACK SURFACING SYSTEM

SECTION 02535

PART 1 - GENERAL

1.01 GENERAL PROVISIONS

A. Attention is directed to the CONTRACT AND GENERAL CONDITIONS and all Sections within DIVISION 01 - GENERAL REQUIREMENTS which are hereby made a part of this Section of the Specifications.

1.02 SCOPE

A. The synthetic surfacing contractor shall furnish all labor, materials, equipment, supervision, and services necessary for the proper completion of all BSS-100 Synthetic Track Surfacing, or equal and related work indicated on the drawings and specified herein.

B. The synthetic surfacing contractor shall refer to the drawings for the required locations of synthetic track surfacing to be installed. All quantities and dimensions shall be field verified by the synthetic surfacing contractor.

1.03 SPECIFIC SCOPE OF WORK

A. Install an IAAF approved, porous polyurethane synthetic track system comprised of a base layer of polyurethane-bound SBR granules and topped with BEYPUR, a single-component polyurethane structural spray, and EPDM granules.

B. Layout and paint all track lines and event markings as required and specified by current IAAF and NFHS rules.

1.04 COORDINATION

A. The synthetic surfacing contractor shall coordinate the work specified with an authorized and appointed representative of the Owner so as to perform the work during a period and in a manner acceptable to the Owner.

PART 2 – CODES AND STANDARDS

2.01 APPLICABLE PUBLICATIONS

A. Codes and standards follow the current guidelines set forth by the International Amateur Athletic Federation (IAAF) and the National Federal of High Schools (NFHS), along with the current material testing guidelines as published by the American Society of Testing and Materials (ASTM).

2.02 PERFORMANCE STANDARDS

A. The Track Surfacing System shall exhibit the following minimum performance standards (ASTM):

- Thickness: (13mm) or as specified
- Shore A Hardness: 55 ± 5 (ASTM D-2240)
- Elongation at Break: ~90% (ASTM D-412)
- Tensile Strength: 0.75 N/mm^2 (ASTM D-412)
- Compression Set Recovery: 90%-95% over 24 hr period (ASTM D-412)
- Abrasion Resistance: 0.25 grams loss after 1000 cycles (ASTM D-501)
- Coefficient of Friction Dry: 0.7-0.75, Wet: 0.6-0.65 (ASTM D-1984)
- Resilience: 37%-39% (ASTM D-2632)
- Tear Resistance: 50-65 psi (ASTM D-624)

PART 3 – QUALITY ASSURANCE

3.01 CONTRACTOR QUALIFICATIONS

A. The Contractor shall have 5 years experience of successfully installing basemat/structural spray running tracks and shall have installed a minimum of 10 complete polyurethane running track surfacing systems including those requiring a structural spray.

B. The Contractor shall be able to furnish evidence that they have been in business for a period of not less than 3 years, under the present name, and if required, furnish financial statements for each of the past 3 years.

C. The Contractor is required to provide documentation that shows the selected specified and installed products meets IAAF Performance Specification for Synthetic Surfaced Athletics Tracks (Outdoor) and is accredited in terms of the IAAF certification system as updated on April 1, 1999.

D. Contractor is to provide a list of completed facilities, minimum 10, which are certified to meet IAAF/NFHS rules & regulations, utilizing the same product as specified.

3.02 SUBMITTALS

The following submittals must be received with bid submittal:

A. Standard printed specifications of the BSS-100 Track Surfacing System, or equal to be installed on this project.

B. An affidavit attesting that the BSS-100 Track Surfacing, or equal material to be installed meets the requirements defined by the manufacturers currently published specifications and any modifications outlined in those technical specifications.

C. A synthetic track surfacing system sample, 6”x6” in size, of the same synthetic track surfacing system to be installed on this project.

D. An installation list of outdoor track facilities installed in the last two (2) years using the exact synthetic track surfacing system specified herein.

PART 4 – MATERIALS

4.01 PRIMERS

A. Primers shall be BEYPRIM, a polyurethane-based primer specifically formulated to be compatible with the paved-in-place SBR granules and BEYPUR track surfacing material.

4.02 BLACK SBR GRANULES

A. The rubber granules for the base mat shall be recycled SBR rubber, processed and chopped to 1-3mm size, containing less than 4% dust.

4.03 EPDM GRANULES

A. The rubber granules for the BEYPUR structural spray wearing coats shall be EPDM peroxide cured, synthetic rubber containing a minimum 20% EPDM resin, with a specific gravity of 1.5 ±0.1 g/cm3. The EPDM rubber shall be the same color as chosen by the Owner for the track surface.

4.04 POLYURETHANE BINDER

A. Binder for the black mat shall be BEYPUR, an MDI-based single-component, polyurethane binding agent. The binder shall not have a free TDI monomer level above 0.2%, must be clear in color and must be solvent free. The binder must be specially formulated for compatibility with SBR rubber crumb.

4.05 STRUCTURAL SPRAY COATING

A. The spray coating shall be BEYPUR, an MDI-based single-component, moisture cured, 100% solids, pigmented polyurethane, specifically formulated for compatibility with EPDM granules. The coating shall be the color specified by the Owner. Pigment intergraded in the field shall not be allowed.

4.06 LINE MARKING PAINT

A. All line and event markings shall be applied by experienced personnel utilizing a single component, moisture cured, aliphatic polyurethane paint compatible with the BSS-100 Track Surfacing material, or equal.

PART 5 – INSTALLATION

5.01 SUBBASE

A. The BSS-100 Track Surfacing System, or equal, shall be laid on an approved subbase. The General Contractor shall provide compaction test results of 95% or greater for the installed subbase and asphalt surface.

B. The track surface, i.e., asphalt substrate, shall not vary from planned cross slope by more than ±1%, with a maximum lateral slope outside to inside of 1%, and a maximum slope of 0.5% in any running direction. The finished asphalt shall not vary under a 10' straight edge more than 1/8".

C. It should be the responsibility of the asphalt-paving contractor to flood the surface immediately after the asphalt is capable of handling traffic, but within 24 hours. If, after 20 minutes of drying time, there are birdbaths evident, it shall be the responsibility of the architect, in conjunction with the surfacing contractor to determine the method of correction. No cold tar patching, skin patching or sand mix patching will be acceptable.

D. Any oil spills (hydraulic, diesel, motor oil, etc.) must be completely removed, either by chipping out or removing and replacing with new, keyed in asphalt. The minimum depth of any asphalt replacement shall be one inch. The curing time for the asphalt base is 28 days. It shall be the responsibility of the surfacing contractor to determine if the asphalt substrate has cured sufficiently prior to the application of polyurethane surfacing system.

E. It shall be the responsibility of the general contractor to determine if the asphalt substrate meets all design specifications, i.e., cross slopes, planarity and specific project criteria. After all the above conditions are met, the synthetic surfacing contractor must, in writing, accept the planarity of the asphalt receiving base before work can commence.

5.02 THICKNESS

A. The thickness of the BSS-100 Track Surfacing System, or equal, shall be 13mm.

5.03 EQUIPMENT

A. The BSS-100 Track Surfacing System, or equal, components shall be processed and installed by specially designed machinery and equipment as manufactured by SMG. A mechanically operated paver with variable regulated speed and thermostatically controlled screed shall be used in the installation of the base mat utilizing continuous and computerized mixing. The wearing course shall be installed using automatic electronic portioning, which provides continuous mixing and feeding for an accurate, quality controlled installation.

5.04 INSTALLATION

A. Base Course

The SBR granules and BEYPUR shall be mixed together on site to regulate the ratio/quantity of SBR, not to exceed 82% in the base mat portion of the system. The single component polyurethane binder shall be mixed with the SBR rubber so that a minimum of 18%, by weight, exists in the final mixture. This mixture is then mechanically installed using the paver.

B. Wearing Course

The 0.5 to 1.5 millimeter EPDM granules shall be mixed with BEYPUR, the single-component structural spray coating. The structural spray shall be made in two (2) uniform applications.

5.05 SITE CONDITIONS

A. Installation shall not take place if adjacent or concurrent construction generates excessive dust, abrasives or any other by-product that, in the opinion of the installer, would be harmful to the track material, until completion of such works.

B. If, in the opinion of the installer of the synthetic material, the weather and/or climatic conditions are detrimental to the proper installation of the surfacing materials, work shall be delayed until conditions are acceptable. Preferred installation temperature is fifty degrees Fahrenheit and rising. Installation shall be executed only in dry conditions.

PART 6 – LINE STRIPING AND EVENT MARKINGS

6.01 LAYOUT

A. Line striping and event markings shall be laid out in accordance with current IAAF and NFHS rules.

6.02 CERTIFICATION

A. Upon completion of the installation, the Owner shall be supplied with all necessary computations and drawings, as well as a letter of certification attesting to the accuracy of the markings.

PART 7 – GUARANTEE

7.01 GUARANTEE

A. The BSS-100 Track Surfacing System, or equal, shall be fully guaranteed against faulty workmanship and material failure for a period of five (5) years from the date of acceptance. The warranty coverage shall not be prorated nor limited by the amount of usage.

B. Synthetic surfacing material found to be defective as a result of faulty workmanship and/or material failure shall be replaced or repaired at no charge, upon written notification within the guarantee period.

END OF SECTION

G:\713050\Specs\newton so hs_complete spec.doc

TRACK LINE-MARKING

SECTION 02536

PART 1 - GENERAL

1.01 GENERAL PROVISIONS

A. Attention is directed to the CONTRACT AND GENERAL CONDITIONS and all Sections within DIVISION 01 - GENERAL REQUIREMENTS which are hereby made a part of this Section of the Specifications.

1.02 DESCRIPTION

A. This section pertains to the application of all line marking. The Contractor shall provide all track event marking required by the American Sports Builder's Association (ASBA), National Federation of High School Standards (NFHS) or requested by the Owner.

1.03 QUALITY CONTROL

A. Submittals: The Contractor will submit for approval a colored track striping plan shop drawing for approval prior to commencing this phase of the work.

PART 2 - MATERIALS

2.01 PRODUCTS

A. 100% Acrylic Line paint (Plexicolor, as manufactured by California Products, or approved equal).

PART 3 - EXECUTION

3.01 INSTALLATION

A. Prior to performing any striping work, the striping contractor shall meet with School officials to discuss and approve the striping layout.

B. The Contractor shall provide all labor, materials and equipment necessary to perform the following:

1. Locate and establish radius points.

2. Establish and set all necessary control points.

3. Lay out all lines and marking to within a one-half inch (1/2") (plus only) tolerance according to the markings layout shown on the plans.

4. Prepare all necessary shop drawings.

5. Provide all computations and measurements in organized form.

6. Establish all locations on the curves.

7. Identify all markings, where appropriate, by painting the identification directly onto the track surface in four (4)" letters just below or in front of each mark in the right hand portion of the lane.

8. Paint all of the large three (3) foot high lane numbers in two (2) colors (shadowed backgrounds). Colors to be determined by Owner upon awarding of Contract.

9. All lines shall receive sufficient paint to assure complete opacity and uniformity of color.

10. Paints shall be used directly from original containers and thinned according to the manufacturers written instructions.

11. Paint application rate shall be as recommended by manufacturer.

12. All measurements shall be made by competent, experienced and fully qualified personnel. Upon completion of the track markings, a licensed professional engineer, registered land surveyor or (USTCTBA) certified track builder shall furnish an acceptable certificate of accuracy of track markings and measurements.

13. The paint used shall be 100% acrylic line paint made specifically for painting athletic tracks. Paint shall be Plexicolor Line-Marking Paint as manufactured by California Product, Cambridge, MA or approved equal.

14. The markings shall include all events and marks required or recommended by all local and national associations (whichever governing body is appropriate), including all hurdle and acceleration marks.

    Upon completion of the track markings, a licensed professional engineer, registered land surveyor or (ASBA) certified track builder shall furnish an acceptable certificate of accuracy of track markings and measurements.

C. Clean Up: The Contractor shall remove all bags, pallets, plastic or any other items associated with his/her work and leave the site in the same state of cleanliness as it was when he/she arrived.

END OF SECTION

G:\713050\Specs\newton so hs_complete spec.doc

DRAINAGE SYSTEM

SECTION 02620

PART 1 - GENERAL

1.01 GENERAL PROVISIONS

A. Attention is directed to the CONTRACT AND GENERAL CONDITIONS and all Sections within DIVISION 01 - GENERAL REQUIREMENTS which are hereby made a part of this Section of the Specifications.

1.02 REFERENCES

A. The publications listed below form a part of this specification to the extent referenced. The publications are referred to in the test by basic designation only.

American Society for Testing and Materials (ASTM)

ASTM D 5034 (1995) Breaking Strength and Elongation of Textile Fabrics (Grab Test)

ASTM F 405 (1996) Corrugated Polyethylene (PE) Tubing and Fittings

ASTM F 667 (1985) Large Diameter Corrugated Polyethylene Tubing and Fittings.

Unibell Handbook of PVC Pipe

C32-73 (1984) Sewer and Manhole Brick

C62-85a Building Brick.

C76-85a Reinforced Concrete Culvert, Storm Drain, and Sewer Pipe.

C139-73 (1985) Concrete Masonry units for Construction of Catch Basins and Manholes.

C270-86b Mortar for Unit Masonry

C443-85A Joints for Circular Concrete Sewer and Culvert Pipe, Using Rubber Gaskets.

C478-85a Precast Reinforced Concrete Manhole Sections.

1.03 SUBMITTALS

A. The following shall be submitted in accordance with Section 01300 SUBMITTALS :

Filter Fabric, Pipe for Subdrains, PVC Manholes, PVC Cleanouts, Tees and fittings specifications.

Certifications from the manufacturers attesting that materials meet specification requirements and samples are required for filter fabric, drain pipe and fittings.

B. Submit shop drawings and manufacturer's specifications and installation instructions for all pipe materials, precast concrete catch basins, manholes frames and covers and catch basin frames and grates.

C. Each shipment of pipe, catch basins and metal castings shall be accompanied with the manufacturer’s notarized certificate that the materials meet the specification requirements.

1.04 DELIVERY, STORAGE AND HANDLING

A. Delivery and Storage

Materials delivered to site shall be inspected for damage, unloaded, and stored with minimum handling. Materials shall not be stored directly on the ground. The inside of pipes and fittings shall be kept free of dirt and debris. During shipment and storage, filter fabric shall be wrapped in burlap or similar heavy duty protective covering. The storage area shall protect the fabric from mud, soil, dust and debris. Filter fabric materials that are not to be installed immediately shall not be stored in direct sunlight. Plastic pipe shall be installed within 6 months from the date of manufacture unless otherwise approved.

B. Handling

Material shall be handled in such a manner as to insure delivery to the trench in sound undamaged condition. Pipe shall be carried and not dragged to the trench.

PART 2 - PRODUCTS

2.01 PIPE MATERIALS

A. General: Ells, tees, reducing tees, wyes, couplings, increasers, crosses, transitions and end caps of same type class of materials as piping unless otherwise indicated.

B. Reinforce Concrete Pipe: ASTM C76, Class III (unless otherwise specified on the project drawings), modified tongue-and-grove compression gasket joints complying with ASTM C443.

C. Corrugated Polyethylene (HDPE) Pipe and Fittings: Use ASTM F 405 for pipes three (3”) to six (6”) inches in diameter, inclusive, ASTM F 667 for pipes eight (8”) to twenty-four (24”) inches in diameter. Fittings shall be manufacturer’s standard type and shall conform to the indicated specification.

Pipe Perforations

Water inlet area shall be a minimum of one-half (0.5 in^2/lf) square inch per liner foot. Manufacturer’s standard perforated pipe which essentially meets these requirements may be substituted with prior approval of the Owner’s Representative.

.

1. Slotted Perforations in Plastic Pipe: Circumferential slots shall be cleanly cut so as not to restrict the inflow of water and uniformly spaced along the length and circumference of the tubing. Width of slots shall not exceed 1/8 inch nor be less than 1/32 inch. The length of individual slots shall not exceed 1-1/4 inches on three (3”) inch diameter tubing, ten (10%) percent of the tubing inside nominal circumference on four (4”) to eight (8”) inch diameter tubing, and 2-1.2 inches on ten (10”) inch diameter tubing. Rows of slots shall be symmetrically spaced so that they are fully contained in two (2) quadrants of the pipe. Slots shall be centered in the valleys of the corrugations of profile wall pipe.

2.02 CONCRETE MANHOLE AND CATCH BASIN MATERIALS

A. The material to be used in the construction of storm manholes, catch basins, and drop inlets shall conform to MHD Standard Specifications and to the following requirements.

B. Precast Concrete Manholes and Catch Basins: ASTM C478, eccentric cone, flat slab precast top; precast riser section and monolithic base section with integral floor.

C. Concrete Compressive Strength: 4000 psi minimum. Type II cement.

D. Reinforcing Steel: ASTM A185, 0.12 sq. in./linear ft. and 0.12 sq. in. (both ways) base bottom.

E. Joints sealed with rubber gaskets conforming to ASTM C443.

F. Steps: Forged 6061B, T6 aluminum or Copolymer Polypropylene Plastic with 1/2 inch Grade 50 steel reinforcement.

2.03 CAST IRON FRAMES AND COVERS

A. Concrete Catchbasins: To be C.I. LeBaron LP246 or approved equal.

B. Concrete Drain Manholes: To be C.I. LeBaron LBW426 or approved equal. Where plans indicate "watertight" cover, provide inner cover LSW268A and locking bar LSW268B, or approved equal.

C. Nyloplast Manholes: To be in accordance with the manufacturer's standard specifications.

2.04 MASONRY MATERIAL

A. Concrete Masonry Units: ASTM C139.

B. Brick: ASTM C32, Grade MS or ASTM C62, Grade SW.

C. Mortar: ASTM C270, Type M.

2.05 PVC MANHOLES AND CATCH BASINS

A. PVC manholes and catch basins shall be manufactured by Nyloplast, or approved equal, and set to the grades and sized in accordance with the contract documents.

2.06 PIPE BEDDING AND COVER MATERIALS

A. Bedding for concrete pipe: as specified in Section 02300.

B. Cover for concrete pipe: as specified in Section 02300.

C. Aggregate Materials

1. Aggregate for embedding and filling trench drains within the synthetic turf field areas, referred to as "washed stone" or "peastone" shall be washed stone fill consisting of washed, durable, crushed rock free from fine sand, silt, or rock flour. Gradation shall conform to the following:

Sieve Size	% Passing by Weight
3/4 in.	100
1/2 in.	90-100
3/8 in.	40-70
No. 4	0-15
No. 8	0-5

2.07 FILTER FABRIC

A. Filter Fabric for wrapping trenches shall be a non-woven polypropylene fabric made specifically for use in subsurface drainage structures equal to Mirafi 14ON, manufactured by Mirafi, Inc., Charlotte, NC 28224.

2.08 FLAT PANEL DRAINS

A. Flat panel drains shall be Multiflow (12") as manufactured by Varicore Technologies, Inc., P.O. Box 131, Prinsburg, MN 56281, or approved equal. All connections for proposed flat panel drains must be completed using manufacturer's approved connectors.

PART 3 - EXECUTION

3.01 EXAMINATION

A. Verify that the trench cut and excavation base is ready to receive work and excavations, dimensions, and elevations are as indicated on contract drawings.

3.02 PREPARATION

A. Hand trim excavations to required elevations. Correct over excavation with gravel borrow in accordance with Section 02300.

B. Remove large stones or other hard matter which could damage piping or impede consistent backfilling or compaction.

3.03 EXCAVATION AND BEDDING FOR DRAIN SYSTEMS

A. All HDPE and Reinforced Concrete piping shall be installed in strict conformance with the Manufacturer's recommendations. If these specifications conflict with the Manufacturer's recommendations, the Contractor shall request direction prior to installation.

B. Trenching and excavation, including the removal of rock and unstable material, shall be in accordance with Section 02300 - Earthwork. Bedding material shall be placed in the trench as indicated or as required as replacement materials used in those areas where unstable materials were removed. Compaction of the bedding material shall be as specified.

3.04 INSTALLATION OF FILTER FABRIC AND HDPE PIPE FOR SUBDRAINS

A. Installation of Filter Fabric

1. Overlaps on Perforated or Slotted Pipes

One layer of filter fabric shall be wrapped around perforated or slotted collector pipes in such a manner that longitudinal overlaps of fabric are in unperforated or unslotted quadrants of the pipes. The overlap shall be at least two (2") inches. The fabric shall be secured to the pipe in such a manner that backfill material will not infiltrate through any fabric overlaps.

2. Trenching Lining and Overlaps

Trenches to be lined with filter fabric shall be graded to obtain smooth side and bottom surfaces so that the fabric will not bridge cavities in the soil or be damaged by projecting rock. The fabric shall be laid flat but not stretched on the soil, and it shall be secured with anchor pins. Overlaps shall be at least twelve (12") inches, and anchor pins shall be used along the overlaps.

B. Installation of HDPE Pipe for Subdrains

1. Pipelaying

Each pipe shall be carefully inspected before it is laid. Any defective or damaged pipe shall be rejected. No pipe shall be laid when the trench conditions or weather is unsuitable for such work. Water shall be removed from any trenches by sump pumping or other approved methods. The pipe shall be laid to the grades and alignment as indicated. The pipe shall be bedded to the established gradeline. Perforations shall be centered on the bottom of the pipe. Pipes of either the bell-and-spigot type or the tongue-and-grove type shall be laid with the bell or groove ends upstream. All pipes in place shall be approved before backfilling.

2. Jointings

a. Perforated Corrugated Polyethylene Pipe: Perforated corrugated polyethylene drainage pipe shall be installed in accordance with the manufacturer's specifications and as specified herein. A pipe with physical imperfections shall not be installed. No more than five (5%) percent stretch in a section will be permitted.

3.05 INSTALLATION OF REINFORCED CONCRETE PIPE

1. Install pipe, fittings, and accessories in accordance with ASTM D2321 and manufacturer's instructions. Seal joints watertight.

2. Place pipe on minimum six (6) inch deep bed gravel bedding as specified in Section 02300

3. Lay pipe to slope gradients noted on drawings with maximum variation from true slope of 1/8 inch in 10 feet.

4. Install gravel borrow at sides to the midpoint of the pipe. Install gravel borrow from the midpoint of the pipe to the elevations indicated on the Contract Drawings, compacted to 95 percent maximum density at optimum moisture content.

5. Refer to Section 02300 for trenching requirements. Do not displace or damage pipe when compacting.

6. Connect to building storm drainage outlet, manholes, through installed sleeves.

3.06 INSTALLATION FOR FLAT PANEL DRAINS

A. The panel drain shall be set **FLAT** directly on the filter fabric and rolled out. The direction and spacing shall be in accordance with the Contract Drawings.

B. Until the synthetic turf subbase material is placed on the field, **ALL** wheeled traffic must be kept off the Multiflow panels. Once a minimum of 2 inches of rock is placed, then T**RACKED** equipment can drive across the Multiflow lines.

3.07 INSTALLATION OF FILTER MATERIAL AND BACKFILLING FOR SUBDRAINS

A. After pipe for subdrains has been laid, inspected, and approved, filter material shall be placed around and over the pipe to the depth indicated. The filter material shall be placed in layers not to exceed eight (8") inches thick and each layer shall be thoroughly compacted by mechanical tampers or rammers to obtain the required density. Compaction of filter material and the placement and compaction of overlying backfill material shall be in accordance with applicable provisions specified in Section 02300 - Earthwork.

3.08 CONCRETE DRAINAGE STRUCTURES

A. Form bottom of excavation clean and smooth to correct elevation.

B. Install and level precast concrete sections with provision for storm drainage pipe and section.

C. Establish elevations and pipe inverts for inlets and outlets as indicated.

D. Mount frame and cover level in grout, secured to top cone section to elevations indicated.

3.09 TESTS

A. Request inspection prior to and immediately after placing aggregate cover over pipe.

B. Compaction testing will be performed in accordance with ASTM D1557.

C. If tests indicate Work does not meet specified requirements, remove work, replace and retest at no cost to the Owner.

D. Frequency of Tests: As directed by Engineer and/or Owner.

E. Pipe Test

Strength tests of pipe shall conform to field service test requirements of Federal Specification, ASTM specification, or AASHTO specification covering the product.

END OF SECTION

G:\713050\Specs\newton so hs_complete spec.doc

IRRIGATION SYSTEM

SECTION 02810

PART 1 – GENERAL

1.01 GENERAL REQUIREMENTS

A. Attention is directed to the CONTRACT AND GENERAL CONDITIONS and all Sections within DIVISION 01 - GENERAL REQUIREMENTS which are hereby made a part of this Section of the Specifications.

B. Coordinate work of this Section with other underground utilities and with trades responsible for their installation. Refer to respective Drawings pertaining to other work.

1.02 DEFINITIONS

A. OWNER'S REPRESENTATIVE
   1. Gale Associates—the Civil Engineer for Newton South High School.

B. ENGINEER
   1. Irrigation Consulting—the engineering consultants hired by Gale Associates to design and plan the irrigation system for Newton South High School.
   2. The coordinator of specifications on well construction and testing.

C. CONTRACTOR
   1. The entity awarded to perform the work specified in this section.

D. SPECIFICATION(S)
   1. The following construction, testing, and reporting specifications within this document (Section 02810).

E. DRAWINGS
   1. The plan titled "Newton South High School Athletic Campus Renovation Project, Newton, MA," and sheets titled "Irrigation Plan" and "Irrigation Details" as drafted by Irrigation Consulting, Inc.
   2. All proposed well, pipe, road crossings, and existing electrical transformers are shown diagrammatically on the plan. Locations of proposed work shall be coordinated with Owner's Representative on-site.

1.03 WORK TO BE PERFORMED

A. Work to be done includes furnishing all labor, materials, equipment and services required to complete all irrigation work indicated on the Drawings, as specified herein, or both.

B. The mechanical point of connection for the irrigation systems shall be two new ground water wells as indicated on the drawings. See Irrigation Well Pump System Specifications.

C. The electrical point of connection for the irrigation systems shall be to a 120-volt, 20-amp electrical circuit provided and installed by others

D. The Drawings and Specifications must be interpreted and are intended to complement each other. The Contractor shall furnish and install all parts, which may be required by the Drawings and omitted by the Specifications, or vice versa, just as though required by both. Should there appear to be discrepancies or question of intent, the Contractor shall refer the matter to the Owner's Representative for decision, and his interpretation shall be final, conclusive and binding.

E. All necessary changes to the Drawings to avoid any obstacles shall be made by the Contractor with the approval of the Owner's Representative.

F. Trench excavation, back filling and bedding materials, together with the testing of the completed installation shall be included in this work.

G. The work shall be constructed and finished in every respect in a good, workmanlike and substantial manner, to the full intent and meaning of the Drawings and Specifications. All parts necessary for the proper and complete execution of the work, whether the same may have been specifically mentioned or not, or indicated on the Drawings, shall be done or furnished in a manner corresponding with the rest of the work as if the same were specifically herein described.

H. Record Drawing as well as Operating & Maintenance Manual generation, in accordance to these specifications shall also be included in this work.

1.04 SCOPE

A. The irrigation system shown on the Drawings and described within these Specifications represents a single controller, athletic field irrigation systems supplied from ground water wells.

B. The system is designed for 120 gallons per minute minimum. Minimum 90-psi dynamic pressure at full system flow is required from the well pump system pressure transducers near the irrigation contractor's point of connection.

1.05 RELATED WORK

A. Carefully examine all of the Contract Documents for requirements that affect the Work of this Section.
   1. Grading: Section 02310
   2. Excavating and backfilling for utilities: Section 02320
   3. Planting: Section 02900
   4. Electrical power supply: Division 16

1.06 ORDINANCES, PERMITS, CERTIFICATIONS, AND INSPECTIONS

A. The Work under this Section shall comply with all ordinances and regulations of authorities having jurisdiction.

B. The Contractor shall obtain and pay for any and all permits, tests and certifications required for the execution of Work under this Section.

C. Furnish copies of Permits, Certifications and Approval Notices to the Owner's Representative prior to requesting payment.

D. The Contractor shall include in their bid any charges by the Water Department, Utility Company, or other authorities for work done by them and charged to the Contractor.

1.07 EXAMINATION OF CONDITIONS

A. The Contractor shall fully inform himself of existing conditions on the site before submitting his bid, and shall be fully responsible for carrying out all work required to fully and properly execute the work of the Contract, regardless of the conditions encountered in the actual Work. No claim for extra compensation or extension of time will be allowed on account of actual conditions inconsistent with those assumed, except those conditions described in the GENERAL CONDITIONS.

1.08 QUALITY ASSURANCE

A. Installer: A firm which has at least five (5) years experience in work of the type and size required by this Section and which is acceptable to the Owner's Representative.

B. References: The Contractor must supply three references for work of this type and size with their bid including names and phone numbers of contact person(s).

C. Applicable requirements of accepted Standards and Codes shall apply to the Work of this Section and shall be so labeled or listed:
   1. American Society for Testing & Materials (ASTM)
      a. ASTM: A536 Ductile Iron Castings
      b. ASTM: D1784 Rigid Poly (Vinyl Chloride) (PVC) Compounds and Chlorinated Poly (Vinyl Chloride) (CPVC) Compounds
      c. ASTM: D1785 Poly (Vinyl Chloride) (PVC) Plastic Pipe, Schedules 40, 80, and Cl200
      d. ASTM: D2464 Threaded Poly (Vinyl Chloride) (PVC) Plastic Pipe Fittings, Schedule 80
      e. ASTM: D2466 Poly (Vinyl Chloride) (PVC) Plastic Pipe Fittings, Schedule 40
      f. ASTM: D2564 Solvent Cements for Poly (Vinyl Chloride) (PVC) Plastic Piping Systems
      g. ASTM: F477 Elastomeric Seals (Gaskets) for Joining Plastic Pipe
      h. ASTM: D2737-99 Polyethylene (PE) Pressure rated tube
   2. National Plumbing Code (NPC)
   3. National Electric Code (NEC)
   4. National Sanitary Foundation (NSF)
   5. American Society of Agricultural Engineers (ASAE)
   6. Underwriters Laboratories, Inc. (UL)

7. Occupational Safety and Health Regulations (OSHA)

1.09 SHOP DRAWINGS

A. The Contractor shall provide copies of product specification sheets on all proposed equipment to be installed to the Owner's Representative for approval prior to the start of work, in accordance with the parameters of Division-1. Work on the irrigation system may not commence until product sheets are submitted and approved. Submittals shall be marked up to show proper nozzles, sizes, flows, etc. Equipment to be included:

1. Sprinkler Heads
2. Valves: Manual and Automatic
3. Controllers/ Enclosures
4. Valve Boxes
5. Pipe and Fittings
6. Wire and Connectors
7. Quick Coupling Valves
8. Rain Sensor
9. Grounding Equipment
10. Miscellaneous Materials

B. Project Record Documents:

1. The Contractor shall provide and keep up-to-date a complete redlined Record Set of Drawings of the system as the project proceeds. Drawings shall be corrected daily, showing every change from the original Drawings and Specifications. Record Drawings shall specify and exactly locate sprinkler type; pop up height and nozzle for each sprinkler installed. Each valve box location to be referenced by distance from a minimum of two permanent locations. Controller(s), rain sensor(s), quick coupling valves and all other equipment shall be indicated on the drawings. All wire routing, wire size and splices shall be indicated. Main line pipe and wire route shall have two (2) distinctly different graphic symbols (line types). Prints for this purpose may be obtained from Owner’s Representative at cost. This redlined record set of drawings shall be kept at job site and shall be used only as a record set.
2. This redlined set of documents shall also serve as work progress sheets and shall be the basis for measurement and payment for work completed. This record set of drawings shall be available at all times for observation and shall be kept in a location designated by Owner’s Representative. Should this record set of drawings not be available for review or not be up-to-date at the time of the observation, it will be assumed no work has been completed. Provide copies of the redlined record set of drawings for Owner’s Representative review on a monthly basis.
3. Make neat and legible notations on this record set of drawings daily as the work proceeds, showing the work as actually installed. For example, should a piece of equipment be installed in a location that does not match the plan, indicate that equipment in a graphic manner in the location of installation and so as to match the original symbols as indicated in the irrigation legend. Should the equipment be different from that specified, indicate with a new graphic symbol both on the drawings and the irrigation legend. The relocated equipment dimensions and northing and easting coordinates should then be transferred to the appropriate drawing in this record set of drawings at the proper time.
4. On or before the date of final field observation, deliver corrected and completed AutoCAD computer plots of “record drawings” on vellum and AutoCAD electronic files on disk to Owner’s Representative as part of contract closeout. Delivery of plots will not relieve Contractor of the responsibility of furnishing required information that may have been omitted from the prints.

C. At the end of each segment of the project the contractor shall submit the following to the Owner’s Representative.

1. Plumbing permits: If none required, so state.
2. Material approvals.
3. Pressure line tests: By who approved and date.
4. Materials furnished: Recipient and date.

1.10 DELIVERY, STORAGE, AND HANDLING

A. Store and handle all materials in compliance with manufacturer’s instructions and recommendations. Protect from all possible damage. Minimize on-site storage.

1.11 GUARANTEE

A. The Contractor shall obtain in the Owner's name the standard written manufacturer's guarantee of all materials furnished under this Section where such guarantees are offered in the manufacturer's published product data. All these guarantees shall be in addition to, and not in lieu of, other liabilities that the Contractor may have by law.

B. In addition to the manufacturers guarantees the Contractor shall warrant the entire irrigation system, both parts and labor for a period of one (1) year from the date of acceptance by the Owner.

C. As part of the one-year warranty the Contractor shall perform the first year-end winterization and spring start-up for the irrigation system.

D. Should any problems develop within the warranty period because of inferior or faulty materials or workmanship, they shall be corrected to the satisfaction of the Owner’s Representative at no additional expense to the Owner.

E. A written warranty showing date of completion and period of warranty shall be supplied upon completion of each segment of the project.

1.12 COORDINATION

A. The Contractor shall at all times coordinate his work closely with the Owner’s Representative to avoid misunderstandings and to efficiently bring the project to completion. The Owner’s Representative shall be notified as to the start of work, progression and completion, as well as any changes to the drawings before the change is made. The Contractor shall also coordinate his work with that of his sub-contractors.

B. The Contractor shall be held responsible for and shall pay for all damage to other work caused by his work, workmen or sub-contractors. Repairing of such damage shall be done by the Contractor who installed the work, as directed by the Owner’s Representative.

1.13 MAINTENANCE AND OPERATING INSTRUCTIONS

A. Contractor shall include in their Bid an allowance for four (4) hours of instruction of Owner and/or Owner's personnel upon completion of check/test/start-up/adjust operations by a competent operator (The Owner’s Representative office shall be notified at least one (1) week in advance of check/test/start-up/adjust operations).

B. Upon completion of work and prior to application for acceptance and final payment, a minimum of three (3) three ring, hard cover binders titled MAINTENANCE AND OPERATING INSTRUCTIONS FOR THE NEWTON SOUTH HIGH SCHOOL IRRIGATION SYSTEM, shall be submitted to the Owner’s Representative office. After review and approval, the copies will be forwarded to the Owner. Included in the Maintenance and Operating binders shall be:

1. Table of Contents
2. Written description of Irrigation System.
3. System drawings:
   a. One (1) copy of the original irrigation plan;
   b. One (1) copy of the Record Drawing;
   c. One (1) reproducible of the Record Drawing;
   d. One (1) copy of the controller valve system wiring diagram
4. Listing of Manufacturers.
5. Manufacturers’ data where multiple model, type and size listings are included; clearly and conspicuously indicating those that are pertinent to this installation.
   a. "APPROVED" submittals of all irrigation equipment;
   b. Operation:
   c. Maintenance: including complete troubleshooting charts.
   d. Parts list.
   e. Names, addresses and telephone numbers of recommended repair and service companies. A copy of the suggested "System Operating Schedule" which shall call out the controller program required (zone run time in minutes per day and days per week) in order to provide the desired amount of water to each area under "no-rain" conditions.
6. Winterization and spring start-up procedures.
7. Guarantee data.

1.14 PROCEDURE

A. Notify all city departments and/or public utility owners concerned, of the time and location of any work that may affect them. Cooperate and coordinate with them in the protection and/or repairs of any utilities.

B. Provide and install temporary support, adequate protection and maintenance of all structures, drains, sewers, and other obstructions encountered. Where grade or alignment is obstructed, the obstruction shall be permanently supported, relocated, removed or reconstructed as directed by the Owner's Representative.

PART 2 – PRODUCTS

2.01 GENERAL

A. All materials to be incorporated in this system shall be new and without flaws or defects and of quality and performance as specified and meeting the requirements of the system. All material overages at the completion of the installation are the property of the Contractor and shall be removed from the site.

B. No material substitutions from the irrigation products described in these specifications and shown on the drawings shall be made without prior approval and acceptance from the Owner's Representative.

2.02 PVC IRRIGATION PIPE

A. All pipe shall bear the following markings: Manufacturer's name, nominal pipe size, schedule or class, pressure rating in psi, and date of extrusion.

B. All pipe in sizes 2-1/2 inches and smaller shall be PVC, Class 200, Type 1120, SDR 21, Solvent-Weld PVC, conforming to ASTM No. D2241 as manufactured by Certainteed, Cresline, JM or equal.

C. All pipe in sizes 3 inches and larger shall be PVC, Class 200, Type 1120, SDR 21, Gasket-Joint PVC, conforming to ASTM No. D2241 as manufactured by Certainteed, Cresline, JM or equal.

D. The pipe insertion mark shall be visible to show the proper depth into spigot.

2.03 PVC PIPE SLEEVES

A. All pipe sleeves beneath non-soil areas shall be PVC, Class 160 water pipe as manufactured by Certainteed, Cresline, JM or equal. Minimum sleeve size to be 3-inch.

2.04 WIRE CONDUIT

A. Conduit for wiring beneath non-soil areas shall be PVC, SCH-40 conduit with solvent-weld joints, as manufactured by Certainteed, Cresline, JM or equal.

B. Sweep ells shall be standard electrical type PVC schedule 40 long sweep elbows. Cap sweep ell with tri-plug with the ring for securing nylon pull rope.

C. Conduit for above ground wiring to rain sensors or controllers shall be galvanized, rigid metallic conduit.

2.05 PVC IRRIGATION FITTINGS

A. Fittings for solvent weld PVC pipe, 2-1/2 inch and smaller in size, shall be Schedule 40 solvent weld PVC fittings as manufactured by Dura, Lasco, Spears or equal.

B. Fittings shall bear manufacturer's name or trademark, material designation, size, and applicable I.P.S. schedule.

C. All PVC threaded connections in and out of valves shall be made using Schedule 80 toe nipples and Schedule 40 couplers or socket fittings. Schedule 40 threads will not be approved for installation.

D. PVC solvent shall be NSF approved, for Type I and Type II PVC pipe, and Schedule 40 and 80 fittings. Cement is to meet ASTM D2564 and FF493 for potable water pipes. PVC solvent cement shall be Rectorseal Gold, IPS Weld-ON 711, Oatey Heavy Duty Cement or equal, and shall be used in conjunction with the appropriate primer. Primer shall be NSF approved, and formulated for PVC and CPVC pipe applications. Primer is to meet ASTM F 656. Primer shall be Rectorseal Jim PR-2, IPS Weld-ON P-68 Clear, Oatey Clear Primer for PVC and CPVC, or equal.

E. Fittings for PVC main line pipe, for all directional changes, pipe reductions and plugs 3- inch and larger in size shall be deep bell push-on gasket joint ductile iron fittings for PVC pipe. Fittings shall be manufactured of ductile iron, grade 70-55-05 in accord with ASTM A536 and gaskets shall meet ASTM F477. Fittings shall be as manufactured by Harrington Corporation, Harco, or equal. For main line pipe to zone valve / lateral pipe

connections, Harco or equal push-on gasket joint ductile iron service tees shall be used. Saddles, (strap, bolt down or snap) will not be approved for installation.

F. All nipples to be schedule 80 PVC.

2.06 LARGE ROTARY SPRINKLERS

A. Large rotary sprinklers shall be gear-driven, rotary type with drain check valve and stainless steel riser designed for in-ground installation. The nozzle assembly shall elevate three inches when in operation and retraction shall be achieved by a stainless steel spring. Check valve shall be capable of holding up to 10 feet of elevation. Sprinkler shall be capable of covering a 49-63 foot radius and flow range of 9.2 to 19.2 gpm at 70 pounds per square inch of pressure.

B. All sprinkler parts shall be removable through the top of the unit by removing a heavy-duty threaded cap. The sprinkler shall have a one- inch (1") IPS water connection on the bottom of the sprinkler.

C. Sprinklers shall be manufactured by Hunter Industries model I35-ADJ/36S.

Hunter I35-ADJ	70psi	180/360 Deg.	9	9.2	50’
Hunter I35-ADJ	70psi	180/360 Deg.	12	13.3	55’
Hunter I35-ADJ	70psi	180/360 Deg.	15	15.2	57’
Hunter I35-ADJ	70psi	180/360 Deg.	21	19.2	63’

a. ELECTRIC CONTROL VALVES

i. Electric control valves shall be one, one and one half and two-inch remote control, diaphragm type, fiberglass or reinforced nylon body plastic valves with manual flow control, manual bleed screw and 200 psi pressure rating.

ii. Valves shall be manufactured by, Rain Bird model PEB, Hunter Industries model ICV or approved equal.

b. CAM AND GROOVE COUPLERS (TRAVELING SPRINKLER CONNECTION)

i. Cam and groove couplers for traveling sprinkler connection shall be of brass construction and have female coupler / female NPT connections.

ii. Cam and groove couplers shall be produced to Mil-C-27487-F. Couplers shall have minimum pressure rating of 250 psi.

iii. Couplers shall be as manufactured by Dixon Valves model BD200EZ, or approved equal.

c. VALVE BOXES

i. All valve boxes shall be manufactured from unformed resin with a tensile strength of 3,100-5,500 psi conforming to ASTM D638. All boxes shall be green in color. Covers shall be green in color unless otherwise specified.

ii. Valve boxes for single 1 inch and 1-1/2 inch electric valves, isolation valves and quick coupling valves shall be 10-inch round valve boxes with metal detection and bolt down covers

iii. Valve boxes for single 2 inch and dual electric valves shall be 12-inch standard valve boxes with metal detection and bolt down covers. When multiple electric valves are installed in the same area, they are to be installed two (2) valves per box in a 12-inch standard box.

iv. Valve boxes for wire splices shall be 10 inch round valve boxes with detectable disks. All splices shall be in separate valve boxes and not included with isolation valves. 24 volt splices shall have gray lids.

v. Valve box extensions shall be provided and installed as required for proper box depth. Valve box extensions shall be made by the same manufacturer.

vi. Valve boxes shall be manufactured by Pentek, Carson Specification Grade, NDS Pro Series or approved equal.

d. AUTOMATIC CONTROLLER

i. Controller shall be electronic in construction with capability of up to 10 hour run times per zone in increments of 1 or 10 minutes. Controllers to have minimum four independent programs, auto/off switch and be capable of manual, semi-automatic and automatic operation. Controller shall have water budgeting feature, cycle and soak feature, sensor input terminal, locking, weather resistant cabinet and internal transformer. Terminal strip connection shall be easily accessible. The controller shall be U.L. listed, 120 volt, 60 Hertz, A.C. type.
ii. Power for automatic controller to be delivered from an internal transformer in nearby well pump control panel.
iii. Controller shall be as manufactured by, Rain Bird model ESP-40MC, Hunter Industries model ICC-4000M or approved equal.
iv. Station quantity shall be minimum of 40.

e. QUICK COUPLING VALVES

i. The valve body shall be of cast brass construction with a working pressure of 125 psi. The valve seat disc plunger body shall be spring loaded so that the valve is normally closed under all conditions when the key is not inserted.
ii. The top of the valve body receiving the key shall be equipped with ACME threads and smooth face to allow the key to open and close the valve slowly. The quick coupling valve shall be equipped with a vinyl cover.
iii. The valve body construction shall be such that the coupler seal washer may be removed from the top for cleaning or replacement without disassembling any other parts of the valve.
iv. Keys shall be ACME with 1-inch male thread and 3/4-inch female thread at the top.
v. Contractor shall provide two (2) keys for quick couplers and two (2) 1-inch x 3/4-inch swivel hose ells.
vi. Quick coupling valves, keys and swivels shall be manufactured by Toro models 100-ATLVC, 100-AK and 075-MHS, Hunter Industries, model HQ-44RC-AW, HK-44 and HS-1 or approved equal.

f. WIRE

i. All valve control wire shall be minimum #14-awg, common #12-awg, single strand, solid copper, UL- approved direct burial AWG-U.F. 600V and shall meet all state and local codes for this service. Individual wires must be used for each zone valve. Common wire shall be white in color, control wire shall be red in color and spare wires, installed where indicated on the drawings shall be blue. White color shall be used for common wire only.
ii. In ground wire connections shall be UL listed, manufactured by 3M, model DBY-6 splice kits. All wire splices shall be made in valve boxes, at controller, or at valves.
iii. Wire type and method of installation shall be in accordance with local codes for NEC Class II circuits of 30-volt A.C. or less.

g. ISOLATION VALVES

i. Isolation valves 3 inches and larger in size shall be cast iron epoxy coated inside and outside, long bell length ring-tite valves, 200 psi rated, ductile iron gland flange, bronze stem-seal box, o-ring stem seal replaceable under pressure, stainless steel stem, 2 inch operating nut and replaceable disc conforming to AWWA C-509 as manufactured by Nibco, Model P-619-RW or approved equal.

h. SWING JOINTS

i. Large rotary sprinklers shall be installed on 1-inch prefabricated PVC unitized swing joint assemblies with double o-ring seals, minimum 315 psi rating and minimum length of 12 inches.
ii. Quick coupling valves to be installed on 1-inch prefabricated PVC unitized swing joint assemblies with double o-ring seals, minimum 315 psi rating and minimum length of 12 inches with brass insert and stabilizer (unless stabilizer is an integral part of the quick coupling valve).

i. AUTOMATIC (WIRELESS) RAIN SENSOR

i. Rain sensor shall be wireless and be plastic in construction with adjustable interruption point.
ii. Rain sensor shall have a minimum time to shut irrigation system off of 5 minutes.
iii. Rain sensor transmitter range must be no less 1,000 feet.
iv. Rain sensor shall transmit at 315 MHz frequency.
v. Rain sensor shall be manufactured by Hunter Industries, model Wireless Rain-Clik (WRC) with sensor guard or approved equal,

j. CRUSHED STONE

i. Crushed stone shall be as specified in SECTION: EARTHWORK. Crushed stone shall be used under valve boxes.

k. SAND

i. Sand used for backfilling of trenches; under, around and over PVC lines shall be as specified in SECTION: EARTHWORK.

l. CONCRETE BASES AND THRUST BLOCKS

i. Standard concrete mix shall be in accordance with ASTM C150, ASTM C-33, and ASTM C-94 with a compressive strength (28 days) of 3,000 psi.
ii. All bell and gasket mainline pipe and fittings shall have thrust blocks sized and placed in accordance with pipe manufacturer's recommendations for standard concrete mix. Thrust blocks shall be installed at all tees, elbows, crosses, reducers, plugs, caps and valves. Contractor shall be responsible to insure the stability of all thrust blocks.
iii. All concrete bases shall be standard concrete mix. Sizes shall be as indicated on the Drawings and sited in the Specifications.

m. CONTROLLER ENCLOSURE

i. The enclosure shall be vandal and weather resistant in nature manufactured entirely of 304-grade stainless steel. The main housing door shall be louvered at the bottom and equipped with a hollow center thermoplastic door seal. The entry lip shall be louvered on the backside. Filter screens shall cover all louvers. The top entry lid shall have two gas springs, for easy access, a continuous stainless steel piano hinge, and a three point locking mechanism with provisions for padlock. Removable stainless steel tray shall be provided and installed for the mounting of electronics and other equipment.
ii. The enclosure shall be a NEMA 3R Rainproof Enclosure as listed by Underwriters Laboratories, Inc.
iii. Controller enclosure shall be 16 inches wide x 15.5 inches deep x 38 inches tall, as manufactured by Strong Box, model SB-16SS or approved equal.

n. GROUNDING EQUIPMENT

i. Each exterior field controller installed outside of a building shall include factory-installed and factory-recommended lightning protection and shall be connected to a 5/8-inch diameter x 10-foot long copper clad grounding rods with minimum #6 AWG, solid, bare copper wire and 4-inch x 96-inch x 0.0625-inch copper grounding plates as outlined below. Minimum 20-foot separation between rod and plate. Minimum 12-foot separation between controller and ground rod. All connections to rods shall be with Cadweld connectors as specified. All connections to plates shall be performed by the plate manufacturer (Paige #182199L) with 25-feet of bare copper wire already attached. Each grounding rod is to be covered by a 4-inch round, grated top, plastic valve cover with metal detection and six inches of 4-inch ADS drainage pipe. Plates shall be installed in ground enhancement material. Plates shall be covered with 4-inch plastic grated cover with detection and minimum 36 inches of 4 inch ADS drainage pipe. Ground rods and plates shall be UL listed.

ii. Each controller shall be grounded to one rod and one plate. The 10-foot rod shall be installed penetrating into the soil to its full length. Plate shall be installed at a 36-inch depth with 50 lbs of Power Set ground enhancement material spread evenly below the plate and 50 lbs spread evenly above the plate in accordance with manufacturer's requirements. The grounding electrodes shall be installed at least 10 feet from wires connected to the field controllers. Each field controller shall have a separate grounding system.

o. SPARE PARTS

i. Contractor shall supply the following tools and equipment to the Owner's Representative before final observation:
   1. Two (2) wrenches for disassembling and adjusting each type of sprinkler head provided.
   2. One (1) quick coupler key assembly for every five or fraction thereof of each type of quick coupling valve provided.
   3. One (1) of each type of gate valve used in the project.
   4. Two (2) of each type sprinkler head and pattern (PC & FC) used in the project.
   5. Two (2) of each type nozzle used in the project.

ii. Before final observation can occur, written evidence that the Owner's Representative has received the tools and equipment must be shown to the Owner.

PART 3 – EXECUTION

a. GENERAL

i. Before work is commenced, hold a conference with the Owner's Representative to discuss general details of the work.

ii. Examine all contract documents applying to this Section noting any discrepancies and bringing the same to the attention of the Owner's Representative for timely resolution.

iii. All work indicated on Drawings shall be provided whether or not specifically mentioned in the Specifications.

iv. If there are ambiguities between Drawings and Specifications, and specific interpretation or clarification is not issued prior to bidding, the interpretation or clarification will be made only by Owner's Representative, and Contractor shall comply with the decisions. In the event the installation contradicts the directions given, the installation shall be corrected by Contractor at no additional cost to Owner.

v. Verify dimensions and grades at job site before work is commenced. Do not proceed with installation of the landscape irrigation system when it is apparent that obstructions or grade differences exist or if conflicts in construction details. Legend or specific notes are discovered. All such obstructions, conflicts, or discrepancies shall be brought to the attention of the Owner's Representative.

vi. Make all field measurements necessary for the work noting the relationship of the irrigation work to the other trades. Coordinate with other trades (landscaping and other site work trades). Project shall be laid out essentially as indicated on the Irrigation Plans, making minor adjustments for variations in the planting arrangement. Major changes shall be reviewed with the Owner's Representative prior to proceeding.

vii. Layout of sprinkler lines indicated on Drawings is diagrammatic only. Location of sprinkler equipment is contingent upon and subject to integration with all other underground utilities. Contractor shall employ all data contained in the Contract Documents and shall verify this information at the construction site to confirm the manner by which it relates to the installation.

viii. Coordinate installation of all sprinkler materials, including pipe, to avoid conflict with the trees, shrubs, or other plantings.

ix. During progress of work, a competent superintendent and all assistants necessary shall be on site. All shall be satisfactory to the Owner's Representative. The superintendent shall not be changed, except with the consent of the Owner's Representative, unless that person proves unsatisfactory and ceases to be employed. The superintendent shall represent the Contractor in his absence and all directions given to the superintendent shall be as binding as if given to the Contractor.

x. At all times, protect existing irrigation, landscaping, paving, structures, walls, footings, etc. from damage. Any inadvertent damage to the work of another trade shall be reported at once.

xi. Replace, or repair to the satisfaction of the Owner, all existing paving disturbed during course of work. New paving shall be the same type, strength, texture, finish, and be equal in every way to removed paving.

b. PIPE AND FITTINGS INSTALLATION

i. Using proper width trencher chain, excavate a straight (vertical) and true trench to a depth of 2-inch of pipe invert elevation.
ii. Loam or topsoil encountered within the limits of trench excavation for irrigation mains and branch lines shall be carefully removed to the lines and depths as shown on the Drawings and stockpiled for subsequent replacement in the upper 6 inches of the trench from which it is excavated. Such removal and replacement of the quantities of loam shall be considered incidental to the irrigation system and no additional compensation will be allowed therefore.
iii. Pipe shall be laid on undisturbed trench bottom provided suitable base is available - no rock larger than 1-inch or sharp edges; if not, excavate to 2-inch below pipe invert and provide and install sand base or crushed stone upon which to lay pipe.
iv. Back filling shall be accomplished as follows: the first 10-inch of backfill material shall contain no foreign matter and no rock larger than 1-inch in diameter. Carefully place material around pipe and wire and tamp in place. Remainder of backfill shall be laid-up in 6-inch (maximum) lifts and tamped to compaction with mechanical equipment. Compact backfill in trenches to dry density equal to the adjacent undisturbed soil, and conform to adjacent grades without dips, sunken area, humps, or other irregularities. Frozen material shall not be used for backfill.
v. Do backfilling when pipe is cool. During hot weather cool pipe by operating the system for a short period, or by backfilling in the early part of the morning before the heat of the day.
vi. Do not, under any circumstances, use truck wheels for compacting soil.
vii. Where feasible, Owner's Representative may authorize the use of flooding in lieu of tamping.
viii. Restore grades and repair damage where settling occurs.
ix. Clean bell and spigot ends and make all gasketed joints in strict accordance with manufacturer's recommendations, making certain not to apply an excess of lubricant, and wiping off any excess lubricant from each connection. Maximum deflection per joint shall not exceed manufacturer's recommendations.
x. Make all solvent-weld joints in strict accordance with manufacturer's recommendations, making certain not to apply an excess of primer or solvent, and wiping off excess solvent from each connection. Allow welded joints at least 15 minutes set-up/curing time before moving or handling. When the temperature is above 80º F, allow connections to set minimum 24 hours before pulling or pressure is applied to the system. When temperature is below 80º F, follow manufacturer's recommendations. Provide and install for expansion and contraction as recommended. Wire shall be laid in same trench as mainline and at pipe invert (see Wire Installation).
xi. Mainline pipe shall have minimum 22 inches of COVER (excavate to invert as required by pipe size). Lateral pipe shall have minimum 16 inches of COVER for PVC and 12 inches of cover for Polyethylene (excavate to invert as required by pipe size).
xii. Cut plastic pipe with handsaw or pipe-cutting tool, removing all burrs at cut ends. All pipe cuts are to be square and true. Bevel cut end as required to conform to Manufacturer's Specifications.
xiii. Every precaution shall be taken to prevent foreign material from entering the pipe while it is being placed in the trench. At times, when installation of the piping is not in progress, the open end(s) of the pipe shall be closed by a watertight plug or other means. All piping, which cannot temporarily be joined, shall be sealed to make as watertight as possible. This provision shall apply during the lunch hour as well as overnight. Pipe not to be installed that day shall not be laid out. Should water enter the trench during or after installation of the piping, no additional piping may be installed or back filled until all water is removed from the trench. Pipe shall not be installed when water is in the trench, when precipitation is occurring, or when the ambient temperature is at 40º F or below. Pipe installed at temperatures below 40º F shall be removed and replaced at no cost to the Owner. PVC pipe shall be snaked in the trench to accommodate for expansion and contraction due to changes in temperature.
xiv. In installing irrigation pipe the Contractor shall route the pipe as necessary to prevent damage to tree roots. Where trenching must occur near trees, the Contractor shall provide proper root pruning and sealing methods to all roots 1-inch and larger.

xv. Maintain 6-inch minimum clearance between sprinkler lines and lines of other trades. Do not install sprinkler lines directly above another line of any kind.
xvi. Maintain 1-inch minimum between lines which cross at angles of 45 to 90 degrees.
xvii. Exercise care when excavating, trenching and working near existing utilities.
xviii. Throughout the guarantee period it will be the responsibility of the Contractor to refill any trenches that have settled due to incomplete compaction.
xix. Pulling of pipe will be allowed provided soil is suitable and specified depth of bury can be maintained.

c. THRUST BLOCKING

i. All ringtite bell-end fittings shall be blocked with an adequately sized thrust block as per ASAE Standard S376.1 and as depicted in the details. Blocking shall be in accordance with pipe and fitting manufacturer's recommendations. Thrust blocks shall be required at all changes in size and direction of bends, reducers, plugs and tees. Thrust blocks shall be installed against undisturbed soil in all cases. Concrete thrust blocks shall utilize 3,000-psi standard concrete mixture. Bricks, stones, boulders, etc. will not be accepted as thrust blocks or thrust block material. Sackcrete will not be permitted as a thrust blocking material. Contractor to supply all material needed for thrust blocking.
ii. Size of thrust block shall be determined by working pressure, size and type of fitting, and soil conditions. Calculate area required for concrete thrust block in contact with soil. Refer to fittings manufacturer’s thrust block sizing table to determine size of thrust block for each condition.
iii. Ensure stability of thrust blocks.
iv. Under no circumstances will concrete block be approved for thrust blocks including for 2-inch fittings.

d. ELECTRICAL WIRE CONDUIT INSTALLATION

i. Electrical conduit shall be installed in all non-soil areas, as well as for all above ground wiring where wire passes under or through walls, walks and paving to controllers and rain sensor.
ii. Conduit shall extend 18 inches beyond edges of walls and pavement.

e. PIPE SLEEVING INSTALLATION

i. Sleeving shall be installed wherever piping is going under a non-soil area, generally where indicated on the Drawings. Minimum cover over all sleeving pipe shall be 24 inches as shown on the detail.
ii. Sleeving shall extend 18 inches beyond edges of walls and pavement.

f. ISOLATION VALVE INSTALLATION

i. Install isolation valves per detail where indicated on the Drawings. Install all isolation valves on a level crushed stone base so that they can be easily opened or closed with the appropriate valve wrench. Install specified valve box over each isolation valve.
ii. Check and tighten valve bonnet packing before valve box and backfill installation.
iii. Provide and install thrust blocks for ring-tite valves as per detail.

g. VALVE BOX INSTALLATION

i. Furnish and install a valve access box for each electric valve, quick coupling valve, isolation valve and wire splice.
ii. All valve access boxes shall be installed on a minimum 4-inch crushed stone base. Finish elevation of all boxes shall be at grade. All crushed stone to be supplied by the Contractor and installed before valve box. Crushed stone shall not be poured into previously installed valve boxes.

h. 24 VOLT CONTROL VALVE INSTALLATION

i. Control valves shall be installed on a level crushed stone base. Grade of bases shall be consistent throughout the project so that finish grades fall within the limits of work. Valves shall be set plumb with adjusting handle and all bolts, screws and wiring accessible through the valve box opening. Valves shall be set in a plumb position with 24-inch minimum maintenance clearance from other equipment.
ii. Install at sufficient depth to provide more than 6-inch, nor less than 4-inch cover from top of valve to finish grade.
iii. Adjust zone valve operation after installation using flow control device on valve.

i. WIRING INSTALLATION

i. Wiring shall be installed along with the main line. Multiple wire bundles shall be cinched together at maximum 12-foot centers using plastic cable cinches and shall be laid beside, and at the same invert as, the irrigation lines. Sufficient slack for expansion and contraction shall be maintained and wiring shall at no point be installed tightly. Provide and install an additional 8 inches to 12 inches slack at all changes of direction. Wiring in valve boxes shall be a sufficient length to allow the valve solenoid, splice, and all connections to be brought above grade for servicing. This additional slack shall be coiled for neatness in the valve box. Each valve shall have a separate wire back to the controller.
ii. All wire shall be laid in trenches and shall be carefully back-filled to avoid any damage to the wire insulation or wire conductors themselves. In areas of unsuitable material, the trench shall have a 2 inches layer of sand or stone dust on the bottom before the wires are laid into the trench and back-filled. The wires shall have a minimum of 12 inches of cover. Wire not to be installed that day shall not be laid out.
iii. An expansion curl shall be provided and installed within 6 inches of each wire connection to a solenoid and at least every 100 feet of wire length on runs more than 100 feet in length. Expansion curls can be formed by wrapping five (5) turns of wire around a 1-inch diameter or larger pipe and then withdrawing the pipe.
iv. Provide and install a common ground wire of white color. No white color shall be used for power wire. Control wire shall be red and spare wiring shall be blue in color.
v. Service wiring in connection with Drawings and local codes for 24-volt service. All in-ground wire connections shall be waterproofed with 3M DBY-6 splice kits. All splices shall be made in valve boxes (wire runs requiring splices between valve locations shall be provided and installed in splice box-valve box shall be used). Splice locations shall be shown on the Record Drawings.
vi. Contractor shall provide a complete wiring diagram showing wire routing for the connections between the controller and valves. See section one for the inclusion of wiring diagram in operation and maintenance manuals.

j. CONTROLLER INSTALLATION

i. Contractor to install controllers in enclosures, generally where shown on the drawings. Contractor to wire valves and rain sensor into controller and set proper program.
ii. Wire controller to 120-volt electrical supply provided and installed to the controller locations by OTHERS.
iii. Keys shall be turned over to Owner.

k. GROUNDING INSTALLATION

i. Each grounding rod shall be driven into the ground its full length within 8-feet of the controller and connected via a Cadweld connection to #6 solid, bare copper wire. The copper wire is to be installed in as straight a line as possible, and if it is necessary to make a turn or bend, it shall be done in a sweeping curve with a minimum radius of 8 inches and a minimum included angle of 90 degrees. There shall be no splices in the bare copper wire. The top of the ground rod shall be driven below the ground surface. A 4-inch grated cover as specified, set a minimum of 1-inch below grade, shall be placed over the ground rod and Cadweld connection for periodic maintenance. Cover shall be installed on a minimum of 6 inches of 4-inch ADS corrugated

polyethylene, perforated drainage pipe. Plates shall be installed 36 inches below grade with 50 lbs of Power Set ground enhancement material spread evenly below the plate and 50 lbs of Power Set ground enhancement material spread evenly above the plate in accordance with the manufacturer's requirements. Plates shall also be covered with a 4 inch grated cover as specified, set a minimum of 1-inch below grade, to facilitate drainage onto the plate. Cover shall be installed on a minimum of 36 inches of 4-inch ADS corrugated polyethylene, perforated drainage pipe.

ii. Multiple controller locations shall have separate grounding for each controller. Grounding rods shall be separated a minimum of 20 feet between grids. Grids shall be installed in an irrigated area.

iii. When tested, grounding grid shall have an earth resistance no greater than 5 ohms. If earth resistance is greater than 5 ohms, additional grounding plates and enhancement material shall be added to system until desired test results have been meet.

l. RAIN SENSOR INSTALLATION

i. Install rain sensor in sensor guard on controller enclosure. Coordinate final location of rain sensor with Owner's Representative. Rain sensor shall be in direct contact with the weather and not in contact with the irrigation spray.

ii. Install rain sensor wiring within 1/2-inch conduit where exposed. All above ground wires shall be installed in conduits.

m. SPRINKLER INSTALLATION

i. Large rotary sprinklers shall be installed flush to grade on 1-inch prefabricated PVC unitized swing joint assemblies with integral o-rings, minimum length 12 inches.

ii. Sprinklers shall not exceed maximum spacing indicated

iii. Adjust sprinkler zone after installation using flow control device on valve.

n. QUICK COUPLING VALVE INSTALLATION

i. Provide and install quick coupling valves where indicated on the Drawings.

ii. Quick coupling valves to be mounted on 1-inch prefabricated PVC unitized swing joint assemblies with integral o-rings, minimum length 12 inches with brass insert and stabilizer as per details.

o. CONTROLLER ENCLOSURE INSTALLATION

i. Install enclosures on concrete pads as indicated on the detail, generally where indicated on the drawings. Final location of enclosures shall be coordinated with the Owner's Representative as to best screen the enclosure and deter vandalism.

ii. Concrete pad for controller enclosure shall be 24 inches long by 24 inches wide by 6 inches deep.

iii. Install one (1) 1-inch sweep elbow (power), one (1) 1-1/2-inch sweep elbow (ground), and one (1) 3-inch sweep elbow (field wiring) through concrete pad into controller enclosure as per detail.

p. CHECK/TEST/START-UP/ADJUST

i. Flushing:

1. After all piping, valves, sprinkler bodies, pipe lines and risers are in place and connected, but prior to installation of sprinkler internals, open the control valves and flush out the system under a full head of water.
2. Sprinkler internals, flush caps and riser nozzles shall be installed only after flushing of the system has been accomplished to the full satisfaction of the Owner's Representative.
3. Contractor shall be responsible for flushing the entire system after installation is complete and will be responsible for any clogged nozzles for thirty (30) days after substantial completion of this portion of the landscape irrigation system.

ii. Testing:

1. Leakage test: test all lines for leaks under operating pressure. Repair all leaks and re-test.
2. Coverage test: perform a coverage test in the presence of the Owner's Representative (notify Architect at least seven (7) days in advance of scheduled coverage test). Representative will determine if the water coverage is complete and adequate. Readjust heads and/or head locations as necessary or directed to achieve proper coverage.
3. All testing shall be at the expense of the Contractor.

q. CLEANING AND ADJUSTING

i. At the completion of the work, all parts of the installation shall be thoroughly cleaned. All equipment, pipe, valves and fittings shall be cleaned of grease, metal cuttings and sludge which may have accumulated by the operation of the system for testing.
ii. Adjust sprinkler heads, valve boxes, and quick coupling valves to grade as required, so that they will not be damaged by mowing operations.
iii. Continue sprinkler coverage adjustment as required by settlement, etc., throughout the guarantee period.
iv. Each control zone shall be operated for a minimum of 5 minutes and all heads checked for consistency of delivering water. Adjustments shall be made to sprinklers that are not consistent to the point that they match the manufacturer's standards. All sprinklers, valves, timing devices or other mechanical or electrical components, which fail to meet these standards, shall be rejected, replaced and tested until they meet the manufacturer's standards.

r. ACCEPTANCE AND OPERATION BY OWNER

i. Upon completion of the work and acceptance by the Owner, the Contractor shall be responsible for the training of the Owner's Representative(s) in the operation of the system (provide minimum 48 hours written notice in advance of test). The Contractor shall furnish, in addition to the Record Drawings and operational manuals, copies of all available specification sheets and catalog sheets to the Owner's personnel responsible for the operation of the irrigation system. The Contractor shall guarantee all parts and labor for a minimum period of one (1) year from date of acceptance.
ii. Conditions for acceptability of work for start of maintenance by Owner issued by Owner or Owner’s Representative shall include but not be limited to:
    1. Punch list items complete and approved by Owner or Owner’s Representative.
    2. Landscape irrigation system complete and in place.
    3. Record drawings complete.
    4. Maintain installation and watering schedules until all conditions noted above have been completed.

s. CLEAN UP

i. Upon completion of all installation work, Contractor shall remove all leftover materials and equipment from the site in a safe and legal manner.
ii. Contractor shall remove all debris resulting from work of this section.
iii. Contractor shall regrade, lightly compact, and replant around sprinkler heads where necessary to maintain proper vertical positioning in relation to established grade.
iv. Contractor shall fill all depressions and eroded channels with sufficient soil mix to adjust grade to ensure proper drainage. Compact lightly, and replant filled areas in accord with Drawings requirements.

END OF SECTION

G:\713050\Specs\newton so hs_complete spec.doc

IRRIGATION WELL PUMPING AND CONTROL SYSTEM

SECTION 02812

PART 1 – GENERAL

1.01 GENERAL REQUIREMENTS

A. Attention is directed to the CONTRACT AND GENERAL CONDITIONS and all Sections within DIVISION 01 - GENERAL REQUIREMENTS which are hereby made a part of this Section of the Specifications.

B. Coordinate work of this Section with other underground utilities and with trades responsible for their installation. Refer to respective Drawings pertaining to other work.

1.02 DEFINITIONS

A. OWNER
   1. Newton South High School (City of Newton)

B. OWNER'S REPRESENTATIVE
   1. Gale Associates—the Civil Engineer for Newton South High School

C. ENGINEER
   1. Irrigation Consulting—the engineering consultants hired by Gale Associates to design and plan the irrigation well supply system for Newton South High School.
   2. The coordinator of Specifications on the well pump system and testing.

D. CONTRACTOR
   1. The entity awarded to perform the work specified in this section

E. SPECIFICATION(S)
   1. The following construction, testing, and reporting specifications within this document (Section 02812).

F. DRAWINGS
   1. The plan titled "Newton South High School Athletic Campus Renovation Project, Newton, MA," and sheets titled "Irrigation Plan" and "Irrigation Details" as drafted by Irrigation Consulting, Inc.
   2. All proposed well, pipe, road crossings, and existing electrical transformers are shown diagrammatically on the plan. Locations of proposed work shall be coordinated with Owner's Representative on-site.

1.03 WORK TO BE PERFORMED

A. Work to be done includes furnishing all labor, materials, equipment, and services required to complete all well pumping, control, electrical work, and operational testing indicated on the drawings.

B. Each well pump and control system shall have the capability of providing the maximum flow rates listed below on a pressure-activated system:
   1. Well #1 = 60 gpm (or rating from yield test)
   2. Well #2 = 60 gpm (or rating from yield test)

C. The irrigation well pumps shall be regulated by variable frequency drive (VFD) controllers. Each pump (2 total) shall be controlled through a pump system control panel located outdoors in the immediate vicinity of the proposed scoreboard as approximately shown on the Drawings. Final locations of the control panels shall be as directed by the Owner's Representative.

D. The pump system power supply shall be a dedicated 208-Volt, 3-Phase (as delivered or induced) 30-Amp source (to be provided by others in proximity to wells and panel locations).

E. The proposed wells (by others) shall be 6-inch diameter steel casing in unconsolidated formations being approximately 50 feet deep (final depth to be determined after field testing).

F. Each well pump systems shall provide the required maximum flow of 60 gpm at a regulated downstream pressure of 90 psi (208 feet of head) at the pressure transducer located in the irrigation utility handhole (see Drawings). The total maximum flow during parallel pumping within the irrigation mainline shall be 120 gpm.

G. The performance and pump sizing of the wells is based on well test data provided by the well driller. Before installation of the pump system, all hydrogeological and water quality test data shall be field verified and reviewed by the Owner's Representative.

H. The Drawings and Specifications must be interpreted and are intended to complement each other. The Contractor shall furnish and install all parts that may be required by the Drawings and omitted by the Specifications, or vice versa, just as though required by both. Should there appear to be discrepancies or question of intent, the Contractor shall refer the matter to the Owner's Representative for decision, and his interpretation shall be final, conclusive, and binding.

I. The work shall be constructed and finished in every respect in a good, workmanlike, and substantial manner, to the full intent and meaning of the Specifications. All parts necessary for the proper and complete execution of the work whether the same may have been specifically mentioned or not, shall be done or furnished in a manner corresponding with the rest of the work as if the same were specifically herein described.

1.04 EXCLUSIONS

A. The following work is NOT INCLUDED with this Specification:
   1. Well Installation
   2. Well Yield Testing
   3. Irrigation system and connection

1.05 ORDINANCES, PERMITS, CERTIFICATIONS, AND INSPECTIONS

A. The work described herein shall comply with all ordinances and regulations of authorities having jurisdiction. This shall include all applicable local, state, and federal regulations.

B. Obtain and pay for any and all additional permits, tests, and certifications required for the execution of work under this section.

C. Furnish copies of permits, certifications, and approval notices to Owner's Representative prior to requesting final payment.

1.06 EXAMINATION OF CONDITIONS

A. The Contractor shall fully inform himself of existing conditions on the site before submitting his bid, and shall be fully responsible for carrying out all work required to fully and properly executing the work of the Contract, regardless of the conditions encountered in the actual work. No claim for extra compensation or extension of time will be allowed on account of actual conditions inconsistent with those assumed.

B. The site shall be investigated by the contractor prior to the start of work and the Owner's Representative informed of any hazards or obstructions, such as but not limited to, overhead power lines, buried cables and buried pipes, which may affect the work. All known or unknown obstructions shall be identified. This shall include all underground utilities.

C. Access to the land immediately surrounding the well site will be granted with sufficient working space for installation operations.

1.07 QUALITY ASSURANCE

A. Installer
   1. A firm which has at least five (5) years experience in work of the size and type required by this section and which is acceptable to the Owner's Representative.
   2. Furnish to the Engineer the names and addresses of five (5) similar projects with the persons or entities installing and testing wells over the past three (3) years.

B. Applicable requirements of accepted Standards and Codes shall apply to the work of this Section:
   1. American Society for Testing & Materials (ASTM)
   2. National Plumbing Code (NPC)
   3. National Electric Code (NEC)
   4. National Sanitary Foundation (NSF)
   5. American Water Works Association (AWWA)
   6. American Society of Agricultural and Biological Engineers (ASABE)
   7. National Groundwater Association (NGWA)

1.08 TESTS

A. Technical start-up of the station
   1. When the pump system and electrical connections have been completed for the pump system, a factory service representative from the manufacturer's factory shall be on hand at the site for a period of one full

day. The following services shall be performed by the Manufacturer at no further cost to the Owner during the visit:

a. Start-up the pump system and pressurize irrigation system.
b. The Manufacturer will conduct training (4 hours minimum) to familiarize the operator(s) with the station operation, maintenance and adjustments.
c. Adjust all valves and pumps on/off pressures and flows for optimum performance of the irrigation system and to prevent frequent on/off cycling of the pumps.
d. Adjust control panel for optimum pump system performance and efficiency.
e. Adjust high-pressure cut-out so that if the pressure of the system rises above a preset psi the pump station will shut down.
f. Monitor a partial cycle of the irrigation system if possible and authorized by the Owner's Representative to identify any problems with the pump system.

B. Testing

1. Pump system shall operate without undue vibration throughout the range of operating conditions. The pump system shall be given a running test of normal start, stop and ramping operations under load. During such tests, the pumps shall demonstrate their ability to operate without undue vibration and shall demonstrate without question their general fitness for service. All defects shall be corrected and adjustments made without expense to the Owner. Tests shall be repeated until satisfactory results are obtained.
2. In addition, the pump system shall show that the safeties incorporated in the system are also functioning.
3. The Owner's Representative will notify Manufacturer and Contractor in advance of final test.
4. Test all lines in pump system under pressure for leaks. Repair all leaks, retest and repaint.
5. Furnish all necessary equipment to perform tests.
6. Test all safety features to insure their proper operation.
7. Review all Maintenance and Operating Manuals section by section with the Owner's Representative and turn them over.

1.09 INSTALLATION SUBMITTALS

A. The Contractor shall provide three (3) copies on all proposed equipment to be installed to the Owner's Representative for approval by Engineer.
B. No well installation shall commence until all product sheets are received and approved.
C. Product data shall contain size, manufacturer, weight, description, etc.
D. Equipment to be submitted, but not limited to, includes:

1. Well Pump
2. Well Pump Motor
3. Pressure Transducer and Cables
4. Well Liquid Level Sensor and Cables
5. Polymer Concrete Handhole
6. Flow Meter
7. Variable Frequency Drive
8. Load Reactor
9. Check Valves
10. Isolation Valves
11. Pressure Relief Valve
12. Brass Fittings (Tees and Nipples)
13. Control Panel Display
14. Microprocessor Control (PLC)
15. Motor Starters
16. Relays
17. Pipe and Fittings
18. Wire
19. Wire Conduit
20. Submersible Pump Cable
21. Pitless Adapter
22. Electrical Disconnect
23. Enclosures
24. High Voltage Control Panel
25. Sanitary Well Cap
26. Gauges

27. Miscellaneous Materials

1.10 DELIVERY, STORAGE, AND HANDLING

A. Store and handle all materials in compliance with manufacturer's instructions and recommendations. Protect from all possible damage. Minimize on-site storage.

1.11 GUARANTEE

A. The Contractor shall obtain in the Owner's name the standard written manufacturer's guarantee of all materials furnished under this Specification where such guarantees are offered in published product data.
B. In addition to the manufacturers guarantees the Contractor shall warrant the entire irrigation system, both parts and labor for a period of one (1) year from the date of acceptance by the Owner.
C. All manufacturers' guarantees shall be in addition to, and not in lieu of, other liabilities, which the Contractor may have by law.
D. Should any problems develop within the warranty period because of inferior or faulty materials or workmanship, they shall be corrected to the satisfaction of the Engineer at no additional expense to the Owner.
E. A written warranty showing date of completion and period of warranty shall be supplied upon completion of the project.

1.12 COORDINATION

A. The Contractor should at all times coordinate his work closely with the Engineer and Owner's Representative to avoid misunderstandings and to efficiently bring the project to completion. The Contractor shall also coordinate his work with any approved sub-contractors and other trades working on-site.
B. The Contractor shall be held responsible for and shall pay for all damage to other work caused by his work, workmen or sub-contractors. Repairing of such damage shall be done by the Contractor who installed the work, as directed by the Owner's Representative.

1.13 MAINTENANCE AND OPERATING INSTRUCTIONS

A. Upon completion of work and prior to application for acceptance and final payment, a minimum of two (2) three-ring, hard cover binders titled MAINTENANCE AND OPERATING INSTRUCTIONS FOR NEWTON SOUTH HIGH SCHOOL ATHLETIC FIELD IRRIGATION WELL PUMP SYSTEMS, shall be submitted to the Owner's Representative. After review and approval, the copies will be forwarded to the Owner. Included in the Maintenance and Operating binders shall be:
   1. Table of Contents
   2. Written description of Irrigation Pump Systems
   3. A complete set of original "Approved" submittals for all system equipment
   4. A complete set of operating instructions for each item of pumping, control, and safety equipment
   5. A complete set of maintenance instructions for each item of pumping, control and safety equipment installed within this contract
   6. A copy of suggested pressure settings for various control equipment for the pump systems
   7. Pump curves for the pumps installed with the operating points and operating curves highlighted
   8. Names, addresses and telephone numbers of recommended repair and service companies
   9. Winterization and spring start-up procedures
   10. Guarantee data

1.14 PROCEDURE

A. Notify all utility owners concerned, of the time and location of any work that may affect them. Cooperate and coordinate with them in the protection and/or repairs of any utilities
B. Provide and install temporary support, adequate protection and maintenance of all structures, drains, sewers, and other obstructions encountered. Where grade or alignment is obstructed, the obstruction shall be permanently supported, relocated, removed or reconstructed as directed by the Owner's Representative

PART 2 – PRODUCTS

2.01 GENERAL

A. All materials to be incorporated in this system shall be new and without flaws or defects and of quality and performance as specified and meeting the requirements of the system. All material overages at the completion of the installation are the property of the Contractor and shall be removed from the site.

B. No material substitutions from the products described in these specifications and shown on the drawings shall be made without prior approval and acceptance from the Owner's Representative.

2.02 PVC PIPE

A. All pipes shall bear the following markings: Manufacturer's name, nominal pipe size, schedule or class, pressure rating in psi, and date of extrusion.

B. All pipe in sizes 2-½ inches and smaller shall be PVC, Class 200, Type 1120, SDR 21, Solvent-Weld PVC, conforming to ASTM No. D2241 as manufactured by Certainteed, Cresline, JM or equal.

C. 1" pressure relief valve discharge piping back to well shall be Schedule 40.

D. The pipe insertion mark shall be visible to show the proper depth into spigot.

2.03 PVC FITTINGS

A. Fittings for solvent weld PVC pipe, 2-1/2 inch and smaller in size, shall be Schedule 40 solvent weld PVC fittings as manufactured by Dura, Lasco, Spears or equal.

B. Fittings shall bear manufacturer's name or trademark, material designation, size, and applicable I.P.S. schedule.

C. All PVC threaded connections in and out of valves shall be made using Schedule 80 toe nipples and Schedule 40 couplers or socket fittings. Schedule 40 threads will not be approved for installation.

D. All nipples to be Schedule 80 PVC.

E. PVC solvent shall be NSF approved, for Type I and Type II PVC pipe, and Schedule 40 and 80 fittings. Cement is to meet ASTM D2564 and FF493 for potable water pipes. PVC solvent cement shall be Rectorseal Gold, IPS Weld-ON 711, Oatey Heavy Duty Cement or equal, and shall be used in conjunction with the appropriate primer. Primer shall be NSF approved, and formulated for PVC and CPVC pipe applications. Primer is to meet ASTM F 656. Primer shall be Rectorseal Jim PR-2, IPS Weld-ON P-68 Clear, Oatey Clear Primer for PVC and CPVC, or equal.

2.04 VALVE BOXES

A. All valve boxes shall be manufactured from unformed resin with a tensile strength of 3,100-5,500 psi conforming to ASTM D638. All boxes shall be green in color. Covers shall be green in color unless otherwise specified.

B. Valve boxes for quick coupling valves and irrigation contractors points of connection shall be 10-inch round valve boxes with metal detection, T-top lids, and bolt down covers.

C. Valve box extensions shall be provided and installed as required for proper box depth. The same manufacturer shall make valve box extensions.

D. Plastic valve boxes shall be manufactured by Armor or approved equal.

2.05 QUICK COUPLING VALVES

A. The valve body shall be of cast brass construction with a working pressure of 125 psi. The valve seat disc plunger body shall be spring loaded so that the valve is normally closed under all conditions when the key is not inserted.

B. The top of the valve body receiving the key shall be equipped with a single slot and smooth face to allow the key to open and close the valve slowly with a one-half turn. The quick coupling valve shall be equipped with a vinyl cover or rust proof metal cover.

C. The valve body construction shall be such that the coupler seal washer may be removed from the top for cleaning or replacement without disassembling any other parts of the valve.

D. Keys shall be single lug with 1-½-inch male thread and 1-inch female thread at the top.

E. Contractor shall provide two (2) keys for quick couplers and two (2) 1-½-inch x 1-inch swivel hose ells.

F. Quick coupling valves, keys, and swivels shall be manufactured by Rain Bird, Hunter or approved equal. Valve shall be 1-½-inch.

2.06 SWING JOINTS

A. Quick coupling valves to be installed on one and one half inch brass swing joint, minimum 12-inches in length with Harco model QCV stabilizer (unless stabilizer is an integral part of the quick coupling valve). Brass swing joints are not prefabricated and shall be assembled with three (3) nipples and minimum three (3) street elbows.

2.07 ISOLATION VALVES

A. Isolation gate valves, 2-½-inch in size where indicated on the drawings, upstream of the pressure transducer on the mainline, and drains shall be of bronze construction, threaded, US Manufacture, 600 WOG with cross handle and 200 psi rating. Gate valves to be as manufactured by Nibco, model T-113-irr.
B. Isolation ball valves for pressure relief valve shall be of bronze construction, US Manufacture, minimum ¾ port, 600 WOG with steel cross handle and chrome plated ball. Ball valves to be as manufactured by Apollo, Boston or Watts.

2.08 CHECK VALVE

A. Check valves to be flanged, 150# rated, center pivot, spring loaded, non-slam, silent type cast iron check valves. Sealing surfaces shall have resilient Buna-N-Rubber as manufactured by Val-Matic or equal. Pressure loss shall not to exceed 3 psi at full discharge capacity.

2.09 PRESSURE RELIEF VALVE

A. A pressure relief valve shall be installed downstream of the pump discharge and pressure transducer as indicated on the Drawings. The valve is to relieve pressure in excess of that which the system is designed to safely maintain.
B. The valve shall be a direct-acting, spring loaded, diaphragm type relief valve.
C. The valve shall be normally closed by the force of a compression spring above the diaphragm. The control pressure shall be applied under the diaphragm. When the controlling pressure exceeds the spring setting, the disc shall be lifted off its seat, permitting flow through the control. When control pressure drops below the spring setting, the spring forces the control back to its normally closed position.
D. Valve pressure adjustment shall be through turning of an adjusting screw on the top of the valve.
E. Valve shall be ¾-inch in size and be constructed of cast bronze body and cover.
F. Discharge from the relief valve shall be a 1-inch Schedule 40 PVC pipe back to the well.
G. Relief valve shall be set at 110 psi.
H. Relief valve shall be as manufactured by Cla-Val model 55 F or approved equal.

2.10 SANITARY WELL CAP

A. A sanitary well cap shall enclose the top of the well casing. All openings in the well cap shall be threaded or gasketed to provide for attachment or closure. The well cap shall incorporate openings or discharge attachments or other appurtenances thereto.
B. The well cap shall be gasketed and vermin proof.
C. Well cap shall fit securely and tamper resistively to all casings.
D. Well cap shall be aluminum or steel.

2.11 PITLESS ADAPTER

A. Pitless adapter shall be of copper alloy 844 brass casting. Pitless adapter shall have Teflon coated neoprene O-rings, flanged neoprene gasket and contoured brass collar. Pitless adapter shall be tested and certified watertight and shall meet Pitless Adapter Standard # 1 (PAS-1).
B. Pitless adapter shall be 2-½-inch in size and as manufactured by Campbell Manufacturing, MAAS Midwest, Merrill or approved equal.

2.12 PUMP PULL/DISCHARGE PIPE

A. 2-½-inch well pump pull and discharge pipes shall be Schedule 40 Steel as manufactured by U.S. Steel, or equal.
B. Schedule 80 reducer bushings shall be used as needed to increase 1-¼-inch NPT pump discharge to 2-½-inch for discharge pipe.

2.13 STATIC LINE

A. Install a ¾-inch Schedule 40 PVC pipe in well for static line.

2.14 SUBMERSIBLE PUMPS AND MOTORS

A. Well pump shall be motor driven, submersible pump and motor. Pump shall operate at 3450 rpm. Pump shall be 200-volt, three-(3) phase, three-(3) wire with ground.
B. Well pump shall be capable of producing the required gallons per minute at the irrigation contractor's point of connection.
C. Pumps shall be manufactured by Goulds pump or approved equal. FINAL PUMP MODEL SELECTION SHALL BE DETERMINED AFTER WELL TESTING IS COMPLETED (initially estimated to both be Goulds Pump Model 75GS50).
D. Pump shall be set at depth to be determined after pumping test.

2.15 WIRE/WIRING

A. All power wiring from the control panel disconnect to the well head shall be with copper conductors rated not less than 600 VAC and of proper size to carry the full load amperage of the motor without exceeding 67% amperage capacity of the conductor. Wire size shall be minimum AWG #8. Wire shall be direct burial cable tray cable, 3-conductor with ground. A grounding cable sized to National Electric Code requirements shall be included in the liquid-tight container.
B. In-ground wire connections for 200-Volt pump power wire shall be UL Listed, 3M 82A or approved equal splice kits. All wire splices shall be made in valve boxes or at disconnects.
C. All submersible wires shall be PVC twisted submersible pump cable, 3-conductor with ground. Wire size shall be minimum AWG #8. Wires shall be spliced in water-tight, quick disconnects.
D. Wire shall be manufactured by Centri-Line, Paige Electric Corporation, or approved equal.
E. Cable for well level sensor and pressure transducer shall be proprietary wire by manufacturer, vented and shielded, with no splicing.
F. All wire paths from control panel to well (Power and Level Sensor Cable) shall be in SEPARATE conduits.
G. Minimum distance separation between power and sensing wires shall be provided wherever possible near the ground surface to minimize interference.

2.16 WIRE CONDUIT

A. Conduit for wiring beneath non-soil areas shall be PVC, Schedule 40 conduit with solvent-weld joints, as manufactured by Certainteed, Cresline, JM or equal.
B. Sweep ells shall be standard electrical type PVC Schedule 40 long sweep elbows. Cap sweep ell with tri-plug with the ring for securing nylon pull rope.
C. Conduit for above ground wiring to control panel or electrical disconnect shall be galvanized, rigid metallic conduit.

2.17 HIGH-VOLTAGE WELL PUMP CONTROL PANEL

A. Electric panel shall be located within 50 feet of irrigation Well 1 and Well 2, which shall control the submersible well pump. Control panel shall receive a dedicated 208 Volt-3 phase power circuit (by others). Panel shall contain starter and over load protection for the pump motor.
B. An internal transformer shall be provided within the control panel to power the nearby irrigation controller pedestal with a dedicated 15-Amp, 120-Volt, 1-Phase power circuit.
C. The entire control panel as a unit shall be UL-Listed.
D. Panel shall meet all NEC, City of Newton, and Massachusetts codes. In the event of a conflict among the codes, the current National Electric Code shall predominate provided it meets minimum local standards.
E. Control panel shall recognize alarm conditions within the pump system. Alarms shall be:
   1. Low water level in well
   2. Low discharge pressure
   3. High discharge pressure
   4. Loss of phase
E. Panel shall have an exterior red alarm light to initialize once any of the alarms have occurred. Light shall be protected with caging to prevent vandalism. Caging shall not obstruct light visibility.

F. A three-pole, fused or approved type main station disconnect shall be mounted in the well pump control panel to completely isolate the electrical system from the incoming power. Disconnect shall conform to all NEC requirements. The main disconnect shall have an operating handle on the front or side of the panel, behind the dead front. Rotary handles shall include actuator supports to enhance alignment.

G. Panel shall have a digital readout of well drawdown (in feet) and pressure (in psi). Well drawdown history shall be recorded and part of the display, as well as, alarm conditions and alarm history. High voltage control panel shall include a window to view the drive digital readout through the door. Maintain NEMA integrity (see Control Panel Display specifications below).

H. Control panel shall be manufactured by Flowtronex, Watertronex, or approved equal.

2.18 CONTROL PANEL ENCLOSURE

A. High voltage, UL-Listed control panel shall be enclosed in an overall, vandal-proof enclosure with a “dead front”. Panel enclosure shall be minimum NEMA 3R rated. The only visible element on the enclosure shall be a red alarm light. Alarm light shall be protected from vandalism by metal caging, constructed of aluminum or galvanized steel. Enclosure shall be manufactured from 0.125” carbon steel. Seams shall be continuously welded and smooth. Gaskets shall be oil resistant. All enclosure openings shall have a rolled lip. Enclosure hinge shall be concealed. The doors shall be removable and interchangeable. Three sides of the panel shall have black quarter turn latches. Enclosure shall have lifting eyes for easy handling.

B. Enclosure finish shall be with ANSI-61 gray urethane polyester powder coating inside and out over phosphatized surfaces.

C. Enclosure shall have two louvers installed on opposing ends for air movement to facilitate cooling of the variable frequency drive.

D. Enclosure shall have padlock housing latch and tamper resistant hardware.

E. Enclosure shall meet or exceed all applicable local, state and National Electric Codes.

F. Enclosure shall be mounted, as a minimum, on 6-inch x 6-inch pressure-treated posts secured to a concrete pad (see Concrete specifications above).

2.19 CONTROL PANEL DISPLAY

A. Control panel display requirements included to be located inside panel enclosure “dead-front”.

B. An HOA switch for pump motor with position indicator mounted in the control panel enclosure door.

C. A power "ON" indicator light is to be mounted in the control panel door or incorporated in the panel display. When this light is lit it should indicate that power is available on the fused side of the control power circuitry.

D. Pump motor is to have an elapsed time hour meter mounted in the control panel door in addition to any incorporated into the display. Meters shall indicate the number of hours and tenths of an hour the motor has been energized since a predetermined point of time.

E. A pump running light (green) for each motor is to be installed in the control panel door. The pump run light is to be illuminated whenever the associated pump motor is drawing electrical current. This light may be integrated as part of the HOA switch.

F. A phase-failure/drive failure light shall be installed in the control panel door. The incoming power to the motor (unless included in the starters) as well as the panel shall be protected by a phase-failure/low voltage system dropout relay to de-energize the pump station in case either phase failure, reversal or low voltage condition occurs. The phase-failure cutout condition will remain in effect after power is restored with the indicator light to remain illuminated until manually reset.

G. A low discharge pressure light/reset button is to be installed in the control panel door or incorporated in the display. The light is to illuminate whenever the station shuts down from a pressure drop below a preset level. A low-pressure reset button in the panel door must be depressed in order to re-energize the entire station. Low discharge pressure is to be sensed by the pump starting set point. When the station discharge pressure decreases to this point and maintains a start signal for the time called out, the pumps will be de-energized and remain so until the circuit is manually reset. Panel shall have a manual override for this circuit located on the panel door, allowing pumps to operate at low pressure to fill irrigation lines.

H. The control panel shall be fused on the incoming line such that only one terminal screw is energized in the entire panel when the fuse circuit is open. The fuse shall be contained within a mechanical switch unit that, when open, also removes the fuse from its contact holder, de-energizing the control circuitry.

I. Control voltage shall be 120 VAC and be supplied from a transformer dedicated to the control circuitry only. Control voltage transformer shall not provide power to any other device. Control voltage transformer shall have over current protection in the form of a circuit breaker on the primary and secondary side.

J. Individual digital LED well drawdown level (in feet) and discharge pressure (in psi) displays shall be incorporated as part of the touch pad displays as pressure transducer outputs.

K. Time-delay relay switches used in the control panel shall be 8-pin, 3-range, field adjustable switches with integral OFF, RUN, ON indicator light. Each time-delay relay shall be independently wired to any of the modes of operation.

L. A double-pole, single-throw, switch is to be installed in the control circuit to override all cut-out circuits.

M. Corrosion-inhibiting modules shall be installed in all electrical enclosures in accordance with the manufacture's recommendations.

N. A low water level cutout indicator lamp shall be mounted in the front control panel door for the well or incorporated as part of the panel display to shut an individual pump down if the water level drops below a preset level in that well. Pump station shall not operate until the safety circuit has been manually reset.

O. All gauges and switch gauges shall be isolated from all electrical switchgear and control panels. Gages should be wired to the panel using waterproof connections. All equipment and wiring shall be labeled and mounted so that maintenance and adjustments can easily be performed from the front of the panel. Gauges shall be liquid filled. All controls shall be assembled from standard industrial logic components.

P. The station shall have a high-discharge pressure safety circuit that will shut down the pumping station if discharge pressure reaches a predetermined high level. Indicating light shall be mounted in the control panel door or incorporated as part of the panel display. Pump station shall not operate until safety circuit has been manually reset.

Q. A password protected code in the software to indicate a monitor or modify status to the programmed data set points. A legend of monitoring codes shall be securely attached to the panel door beside the keypad.

R. The Manufacturer shall provide one of each size and type fuse included in the pump control panel for quick replacement.

S. Touch screen control panel shall be manufactured by Flowtronex PSI, model OASIS, or approved equal.

2.20 VARIABLE FREQUENCY DRIVE CONTROL

A. The inverter manufacturer shall have a minimum of 5 years experience in inverters and shall have a minimum 4 years experience with IGBT transistors used with the drive to produce the output PWM waveform, allowing quiet motor operations.

B. The adjustable speed inverter shall be a pulse width modulated (PWM) design that has a carrier frequency of 3KHZ or higher so no acoustic noise will be produced onto the motor. The adjustable speed drive shall generate a sine-coded, adjustable voltage/frequency three phase output for complete speed control of any NEMA B VAV duty squirrel cage induction motor. The adjustable speed drive shall maintain a 120% current overload capability for sixty seconds with automatic stall prevention and boost to prevent a nuisance tripping during load or line side transient conditions. The adjustable speed drive shall maintain a power factor of not less than 0.95 throughout its speed range.

C. The adjustable speed drive shall have the following basic design:

1. Inverter shall consist of a modular assembly consisting of diode rectifier and capacitor assembly, which will first convert, then filter and maintain a fixed DC voltage source from the fixed voltage and frequency input.
2. Inverter shall use Insulated Gate Biopolar Transistor (IGBT) with a minimum rating of 1000 VDC on 480 VAC controls to invert the converter fixed DC voltage into a sine-coded pulse width modulated output.
3. Control logic shall consist of a single printed circuit board for all horsepower sizes and incorporate an 8 bit or larger, microcomputer central processing unit to control all inverter, converter, base drive and external interface functions.
4. Terminal strip for input and output signals must be provided.
5. Drive to be mounted in the high voltage control panel.

D. Adjustable speed drive to include, as a minimum, the following design features as standard:

1. 3KHz or higher sine-coded, pulse width modulated output
2. Eight bit microcomputer control logic
3. Maximum and minimum speed adjustment capability
4. Controlled speed range of minimum 20:1
5. Overload capability of 120% for 60 seconds, 110% continuous
6. Process follower 4-20m ADC, 0-5 VDC, 01-10 VDC or 0-135 ohm resistance input
7. Minimum of three selectable output frequency ranges
8. Sixteen selectable volts/hertz patterns
9. A four segment digital readout displaying frequency, status, percent current, percent voltage and percent response signal

10. Current limiting circuit
11. Coast or ramp to stop
12. Electronic reversing
13. Adjustable acceleration and deceleration
14. Fault indicators
15. Fault contacts
16. The drive shall have an open-collector output signal to indicate when the drive's output is at maximum and minimum speed

E. Adjustable speed drive shall have as a minimum the following protective features:
1. Ground fault protection
2. Thermal motor overload relay
3. Current limit adjustable from 60% - 100%
4. Current limited stall prevention during acceleration, deceleration and run conditions
5. Automatic restart after momentary power loss or over voltage. The drive shall not restart into faults other than over voltage, under voltage, or over current due to acceleration rate set to fast, because other faults, such as over current to blown transistor or a short circuit on the output, could cause damage to the inverter. No restart into ground fault.
6. Start into a rotating motor
7. Fault indicators shall indicate the following fault conditions. Faults should be displayed by flashing on the LED display on the front panel of the inverter. When a fault occurs, the drive shall have built in diagnostic functions that assist in determining the cause and source of the fault. The drive shall also indicate the level of current and voltage and the frequency at the time of the fault.
   a. Over current while running
   b. Over current on output
   c. Internal short circuit
   d. Overload
   e. Over voltage during deceleration
   f. Over voltage due to power surge
   g. Over temperature
   h. Control function error
   i. Ground fault
8. DC bus discharge indicator. The drive must have a visual indication that is visible with the door closed as to whether hazardous voltage still remains on the DC bus so servicing technicians may avoid exposing themselves to dangerously high voltage.
9. Current limiting DC bus fuse.
10. Isolated operator controls.
11. Phase-to-phase short circuit protection.
12. High speed current limiting fuses before drive.
13. Contactors in front of drive.

F. The adjustable speed drive shall have the following adjustments available:
1. Acceleration - 0.1 to 300 seconds.
2. Deceleration - 0.1 to 300 seconds.
3. Volts/hertz adjustments.
4. Maximum frequency range.
5. Minimum frequency (0 to 100% speed).
6. Maximum frequency (0 to 100% speed).
7. Carrier frequency (3KHZ to 16KHZ).
8. Bias and gain adjustment for 4-20mA, 0-5VDC, 0-10VDC follower.

G. The adjustable speed drive shall be designed to operate within the following environmental and service conditions:
1. Ambient service temperature: -10 C to 40 C
2. Ambient storage temperature: -20 C to 60 C
3. Humidity: non-condensing to 90%.
4. Altitude to 3300 feet.
5. Service factor: 1.1.
6. Input voltage: 380/400/480VAC +/- 10% for 480VAC series.
7. Input frequency: 50/60 hertz +/- 3%.

H. The adjustable speed drive shall be subject to the following parameters and tests:
1. All integrated circuits (TTL) and all components used for circuit board construction shall be tested to an acceptance criteria of 0.5% AQL (Accepted Quality Level).

2. In-circuit testing of all printed circuit boards shall be conducted to insure proper mounting and correct value for all components.
3. Final printed circuit board assemblies shall be functionally tested via computerized test equipment where all tests and acceptance criteria are pre-programmed and test results are stored as detailed quality assurance data.
4. All fully assembled controls shall be combined-tested for performance and functionality at the manufacturer's factory with fully loaded VAV rated induction motors. The combined test data shall then be analyzed to insure adherence to quality assurance specifications.

I. The adjustable speed drive shall be designed and built to the following standards:
1. U.L. listed
2. NEMA listed
3. IEEE 587

J. The inverter may be programmed locally from a standard front mounted programming panel or through a serial communication port.

K. The variable frequency drive shall have an internal DC link choke to prevent electrical noise from the drive to power source.

L. Inverter manufacturer shall have the following available:
1. Service engineer
2. Training/Service schools
3. 24 hour phone service

M. The drive manufacturer shall be ABB 550 Series or equal.

2.21 PROGRAMMABLE LOGIC CONTROLLER (PLC)

A. The pump sequence controller shall be an industrial grade multi-function-micro-processor, field programmable, and equipped with light emitting diodes for diagnostic and monitoring purposes. It shall be capable of operating at temperatures of 0 to 70 degrees Celsius (32 to 150 degrees Fahrenheit). The microprocessor shall integrate to the other hardware items through optically isolated input/output modules. The programming shall be stored in EEPROM memory. It shall have a minimum of 128K of battery backed RAM to store pump station operation history. For optimum viewing it shall incorporate a bright vacuum florescent display. The data entry shall be through an environmentally sealed keyboard.

B. The controller shall receive inputs from a liquid level sensor located in the well capable of providing controlled time sequence station start-up, starting and retiring pumps through the use of the liquid level sensor and variable frequency drive.

C. PLC shall also limit flow to 60 gpm MAXIMUM as sensed by 4-20mA flow sensor.

D. PLC shall be manufactured by Allen Bradley, model 503 or approved equal.

2.22 RELAYS

A. Relays shall be 24-Volt contactor, rated 10 Amps. Relays shall be NRU series with LED indicator and 4.7K to 100K sensitivity. Relays shall be installed in a NEMA 4 enclosure housings and shall be mounted on the top left side of pump station control panels.

2.23 LIGHTNING SURGE PROTECTION

A. All electrical equipment shall be protected by a UL approved Category C or Category B surge arrester, which shall suppress excessive voltage surges on incoming power. The device shall withstand an impulse of 10Kv/10Ka under IEEE C62.41 Category C and shall withstand a ringwave of 6Kv/500a and an impulse of 6Kv/3Ka under Category B. Pass voltage for a 208v device to the end equipment shall not exceed 1800V when subjected to an 8 x 20 microsecond wave shape, resulting in the following performance statistics: 3720 joules minimum dissipation at 82,500,000VA and 1800V maximum voltage. Response time shall be less than 5 nanoseconds.

2.24 PRESSURE TRANSDUCER

A. Pressure transducer shall be a solid-state bonded strain gage type with accuracy of plus/minus 0.25% and constructed of stainless steel. Transducer shall be rated for station discharge pressure as shown on technical data sheet, and shall provide gauge pressure output, rather than an absolute. Pressure transducer shall be constructed of stainless steel. Pressure transducer shall be 4-20mA analog type with 7- 33 VDC supply range

B. Pressure transducer shall have a stainless steel diagram and 200 psi burst pressure rated for submersible applications. Transducer shall also have built-in surge protection.
C. Transducer shall have a ¼-inch NPT welded pressure port adapter for installation into water piping. Transducer shall measure pump discharge pressure and have a range of 0-120 psi gauge.
D. The pressure transducer shall be as manufactured by Druck Model PTX 1235 or approved equal.

2.25 SENSOR TERMINATION ENCLOSURE

A. A sensor termination enclosure is required for the transducer cable, prior to connection to the variable frequency drive controller. Enclosure shall be NEMA 4X with desiccant to remove moisture. Sensor Termination Enclosure shall be manufactured by Druck Model STE-110 or approved equal.

2.26 FLOW SENSOR

A. Pump system flow sensors shall have the ability to report the gallons per minute being pumped and the totalized flow volume. The flow sensor must be accurate to within plus or minus 1% of full scale and display the repeatability of plus or minus 0.5% of full scale. Flow sensor **shall be installed according to manufacturer's recommendations**.
B. Flow sensor must be compatible with specified Programmable Logic Controller (PLC) to limit flow to 60 gpm per well pump.
C. Flow sensor to be Data Industrial Model 228CB2005-1211 or approved equal.

2.27 WELL LIQUID LEVEL SENSOR

A. Water level controls shall be monitored with the PLC using a submersible pressure transducer hung in the well by transducer cable.
B. A relay shall be installed such that the irrigation program will be interrupted at the low water condition. This requires the irrigation controller common to be wired to the pump control panel through the relay. When low water condition is reached, the pump will shut off AND the irrigation zone valves will remain closed.
C. Contractor shall provide sufficient cable length to directly connect to the control panel. NO SPLICES WILL BE ALLOWED BETWEEN WELL LEVEL TRANSDUCER AND CONTROL PANEL.
D. Well level sensor shall be submersible, wetted materials constructed of 316SS or Titanium, and produce a 4-20mA-output signal to the microprocessor (PLC) in the control panel.
E. Well level sensor shall be capable of measuring hydrostatic water level within the wells from 2.5 to 700 feet of water.
F. Well level sensor to be manufactured by Esterline as KPSI Series 700 or approved equal.
G. Manufacturer of sensor to provide sufficient length of pre-installed sensor cable.

2.28 EQUIPMENT SERVICE GROUND

A. Each well pump control panel shall be grounded in accordance with the National Electrical Code and manufacturer’s requirements.
B. Grounding rod to be 5/8 inch x 10 foot copper clad, UL Listed.
C. Grounding plate to be 4 inch x 96 inch x 0.06 inch copper alloy with integral connection of 25 feet of #6 AWG bare, solid copper wire, UL Listed conforming to the minimum requirements of Section 250 of the National Electric Code. Connection of the wire to plate shall be performed by the plate manufacturer.
D. Grounding connection to utilize an exothermic welding process, Cadweld connector, UL Listed, Model GT1161G.
E. Grounding wire shall be#6 AWG, solid, bare copper wire.
F. Ground enhancement material shall be PowerSet as manufactured by Loresco, 50 pound bags.

2.29 CONCRETE BASES

A. Standard concrete mix shall be in accordance with ASTM C150, ASTM C-33, and ASTM C-94 with a compressive strength (28 days) of 3,000 psi.
B. All concrete bases for Control Panels shall be standard concrete mix. Sizes shall be 3 feet x 4 feet x 6 inches thick.

2.30 POLYMER CONCRETE IRRIGATION HANDHOLE

A. A new polymer concrete irrigation handhole shall be installed within 10 feet of each well pump control panel (see Drawings).

B. Irrigation handhole shall contain pressure relief valve, pressure transducer, and flow sensor—all of which are installed directly on the 2-½ inch well discharge mainline.

C. Irrigation handhole shall be of solid polymer concrete construction and be watertight. All pipe and conduit openings shall use watertight seals.

D. Irrigation handhole shall be customized to accommodate well pump discharge mainline through and wire conduits for flow sensor and pressure transducer incoming and pressure relief valve discharge outgoing.

E. Irrigation handhole shall be approximately 3 feet wide by 5 feet long by 3 feet deep and be manufactured by Carson Industries or equal.

2.31 SEQUENCE OF OPERATION

A. Well pump shall be controlled through the variable frequency drive and shall start on a drop in pressure. Motor speed of pump shall vary to maintain a constant downstream pressure of 90 psi at irrigation point of connection.

B. After final irrigation zone valve closes, mainline pressure transducer shall sense an increase in pressure and shut off the pump.

C. Well pumps shall be stopped upon a low-drawdown level in the well as sensed by the well pressure transducer and processed through the microprocessor (PLC). Power shall be cut to the pump—suspending irrigation until the wells have recovered.

D. Well pumps shall be limited to 60 gpm maximum as sensed by flow sensor through the microprocessor (PLC).

E. Well pumps shall be stopped upon any other alarm condition specified above.

PART 3 – EXECUTION

3.01 GENERAL

A. Examine all contract documents applying to this Section noting any discrepancies and bringing the same to the attention of the Owner's Representative for timely resolution.

B. All work indicated on the Drawings shall be provided whether or not specifically mentioned in the Specifications.

C. Make all field measurements necessary for the work noting the relationship of the well work to the other trades. Coordinate with the Owner's Representative.

D. During progress of work, a competent superintendent and all assistants necessary shall be on site. All shall be satisfactory to the Owner's Representative. The superintendent shall not be changed, except with the consent of the Owner's Representative, unless that person proves unsatisfactory and ceases to be employed. The superintendent shall represent the Contractor in his absence and all directions given to the superintendent shall be as binding as if given to the Contractor.

E. At all times, protect existing irrigation, landscaping, paving, structures, walls, footings, etc. from damage. Any inadvertent damage to the work of another trade shall be reported at once.

3.02 PUMP INSTALLATION

A. Pumps shall be installed in new wells per AWWA standards. Install downstream control equipment in valve boxes and polymer concrete handholes as indicated on the Drawings and Specifications.

B. Install well cap on well casing and hang pump on Schedule 40 steel pipe.

F. Set pumps in wells such that the pump inlet is centered in the well screen.

G. Install ¾-inch Schedule 40 PVC pipe for well static level readings.

3.03 PIPE AND FITTINGS INSTALLATION

A. Using proper width trencher chain, excavate a straight (vertical) and true trench to a depth of 2 inches from pipe invert elevation.

B. Loam or topsoil encountered within the limits of trench excavation shall be carefully removed to the lines and depths as shown on the Drawings and stockpiled for subsequent replacement in the upper 6 inches of the trench from which it is excavated. Such removal and replacement of the quantities of loam shall be considered incidental to the well pump system and no additional compensation will be allowed therefore.

C. Pipe shall be laid on undisturbed trench bottom provided suitable base is available - no rock larger than 1 inch or sharp edges; if not, excavate to 2 inches below pipe invert and provide and install sand base or crushed stone upon which to lay pipe.

D. Backfilling shall be accomplished as follows: the first 10-inch of backfill material shall contain no foreign matter and no rock larger than 1-inch in diameter. Carefully place material around pipe and wire and tamp in place. Remainder of backfill shall be laid-up in 6-inch (maximum) lifts and tamped to compaction with mechanical equipment. Compact backfill in trenches to dry density equal to the adjacent undisturbed soil, and conform to adjacent grades without dips, sunken area, humps, or other irregularities. Frozen material shall not be used for backfill.

E. Restore grades and repair damage where settling occurs.

F. Make all solvent-weld joints in strict accordance with manufacturer's recommendations, making certain not to apply an excess of primer or solvent, and wiping off excess solvent from each connection. Allow welded joints at least 15 minutes set-up/curing time before moving or handling. When the temperature is above 80º F, allow connections to set minimum 24 hours before pulling or pressure is applied to the system. When temperature is below 80º F, follow manufacturer's recommendations. Provide and install for expansion and contraction as recommended. Wire shall be laid in same trench as mainline and at pipe invert (see Wire Installation).

G. Pipe shall have minimum 24 inches of COVER (excavate to invert as required by pipe size).

H. Cut plastic pipe with handsaw or pipe-cutting tool, removing all burrs at cut ends. All pipe cuts are to be square and true. Bevel cut end as required conforming to Manufacturer's Specifications.

I. Every precaution shall be taken to prevent foreign material from entering the pipe while it is being placed in the trench. At times, when installation of the piping is not in progress, the open end(s) of the pipe shall be closed by a watertight plug or other means. All piping, which cannot temporarily be joined, shall be sealed to make as watertight as possible. This provision shall apply during the lunch hour as well as overnight. Pipe not to be installed that day shall not be laid out. Should water enter the trench during or after installation of the piping, no additional piping may be installed or back filled until all water is removed from the trench. Pipe shall not be installed when water is in the trench, when precipitation is occurring, or when the ambient temperature is at 40º F or below. Pipe installed at temperatures below 40º F shall be removed and replaced at no cost to the Owner. PVC pipe shall be snaked in the trench to accommodate for expansion and contraction due to changes in temperature.

J. Throughout the guarantee period it will be the responsibility of the Contractor to refill any trenches that have settled due to incomplete compaction.

3.04 ELECTRICAL WIRE CONDUIT INSTALLATION

A. Electrical conduit shall be installed where approximately shown on the Drawings, as well as for all above ground wiring.

B. Conduit burial depth and installation shall per National, State and Local electrical code. Contractor shall check with the City of Newton Electrical Inspector prior to construction and obtain approval for installation, including burial depth and separation distance between power and water.

3.05 VALVE BOX INSTALLATION

A. Furnish and install a valve access box for quick coupling valve, isolation valve, and wire splice.

B. All valve access boxes shall be installed on a minimum 4-inch crushed stone base. Finish elevation of all boxes shall be at grade. All crushed stone to be supplied by the Contractor and installed before valve box. Crushed stone shall not be poured into previously installed valve boxes.

3.06 WIRING INSTALLATION

A. Electrical wires shall be installed in conduit above and in ground. Sufficient slack for expansion and contraction shall be maintained and wiring shall at no point be installed tightly.

B. The wires and conduits shall have a minimum of 24 inches of cover.

C. Electrical service wiring shall be in accordance with all national, state and local codes for 208 Volt, 3-Phase, 60 Hz service.

D. All in-ground and underwater wire connections shall be waterproofed with UL approved splice kits.

E. Contractor shall provide a complete wiring diagram showing wire routing for the connections between the pump controller, pressure transducer and panel.

3.07 CONTROL PANEL INSTALLATION

A. Contractor shall install electrical control panel approximately where shown on the drawing and where approved by the Owner's Representative.
B. Wire irrigation controller common through relay in control panel.
C. Wire panel to 208-Volt, 3-Phase electrical supply provided by others.
D. Keys shall be turned over to Owner's Representative.

3.08 GROUNDING INSTALLATION

A. Each grounding rod shall be driven into the ground its full length within 8-feet of the controller and connected via a Cadweld connection to #6 solid, bare copper wire. The copper wire is to be installed in as straight a line as possible, and if it is necessary to make a turn or bend, it shall be done in a sweeping curve with a minimum radius of 8 inches and a minimum included angle of 90 degrees. There shall be no splices in the bare copper wire. The top of the ground rod shall be driven below the ground surface. A 4-inch grated cover as specified, set a minimum of 1-inch below grade, shall be placed over the ground rod and Cadweld connection for periodic maintenance. Cover shall be installed on a minimum of 6 inches of 4-inch ADS corrugated polyethylene, perforated drainage pipe. Plates shall be installed 36 inches below grade with 50 lbs of Power Set ground enhancement material spread evenly below the plate and 50 lbs of Power Set ground enhancement material spread evenly above the plate in accordance with the manufacturer's requirements. Plates shall also be covered with a 4 inch grated cover as specified, set a minimum of 1-inch below grade, to facilitate drainage onto the plate. Cover shall be installed on a minimum of 36 inches of 4-inch ADS corrugated polyethylene, perforated drainage pipe.

3.09 QUICK COUPLING VALVE INSTALLATION

A. Provide and install quick coupling valve where indicated on the Drawings.
B. Quick coupling valves to be mounted on 1.5-inch brass swing joints with stabilizers as per specifications.

3.10 TESTS

A. TECHNICAL START-UP OF THE STATION – When a pump control panel and electrical connections have been completed for the pump system, a factory service representative from the manufacturer of the pump control system shall be on hand at the site for a period of one (1), two-hour visit per well. The following services shall be performed by the Manufacturer at no further cost to the Owner during the visit:
   1. Start-up the pump system and pressurize irrigation system.
   2. The Manufacturer will conduct training (2 hours minimum) to familiarize the operator(s) with the station operation, maintenance and adjustments.
   3. Adjust all valves and pumps on/off pressures and flows for optimum performance of the irrigation system and to prevent frequent on/off cycling of the pumps.
   4. Adjust control panel for optimum pump system performance and efficiency.
   5. Adjust high-pressure cut-out so that if the pressure of the system rises above a preset pressure the pump station will shut down.
   6. Monitor a partial cycle of the irrigation system if possible and authorized by the Owner's Representative to identify any problems with the pump system.

B. SYSTEM TESTING
   1. Pump system shall operate without undue vibration throughout the range of operating conditions. The pump system shall be given a running test of normal start, stop and ramping operations under load. During such tests, the pump shall demonstrate its ability to operate without undue vibration and shall demonstrate without question its general fitness for service. All defects shall be corrected and adjustments made without expense to the Owner. Tests shall be repeated until satisfactory results are obtained.
   2. In addition, the pump system shall show that the safeties incorporated in the system are also functioning.
   3. The Manufacturer and Contractor shall notify the Owner's Representative in advance of final test.
   4. Test all lines in pump system under pressure for leaks. Repair all leaks and re-test.
   5. Furnish all necessary equipment to perform tests.
   6. Review all Maintenance and Operating Manuals section-by-section with the Owner's Representative and turn them over.

3.11 ACCEPTANCE BY OWNER

A. Upon completion of the work and acceptance by the Owner, the Contractor shall be responsible for the training of the Owner's Representative(s) in the operation of the system (provide minimum 7 days written notice in advance of test). The Contractor shall furnish, in addition to the Record Drawings and operational manuals, copies of all available specification sheets and catalog sheets to the Owner's personnel responsible for the operation of the well pump system. The Contractor shall guarantee all parts and labor for a minimum period of one (1) year from date of acceptance.

3.12 CLEAN UP

A. Upon completion of all installation work, Contractor shall remove all leftover materials and equipment from the site in a safe and legal manner.
B. Contractor shall remove all debris resulting from work of this section.

END OF SECTION

G:\713050\Specs\newton so hs_complete spec.doc

IRRIGATION WELL INSTALLATION, DEVELOPMENT, AND TESTING

SECTION 02814

PART 1 – GENERAL

1.01 GENERAL REQUIREMENTS

A. Attention is directed to the CONTRACT AND GENERAL CONDITIONS and all Sections within DIVISION 01 - GENERAL REQUIREMENTS which are hereby made a part of this Section of the Specifications.

B. Coordinate work of this Section with other underground utilities and with trades responsible for their installation. Refer to respective drawings pertaining to other work.

C. Fill out Bid Sheet of Specification for unit pricing on materials and labor and total bid price.

1.02 DEFINITIONS

A. OWNER'S REPRESENTATIVE
   1. Gale Associates—the Civil Engineer for Newton South High School

B. ENGINEER
   1. Irrigation Consulting—the engineering consultants hired by Gale Associates to design and plan the irrigation well supply system for Newton South High School.
   2. The coordinator of specifications on well construction and testing.

C. CONTRACTOR
   1. The entity awarded to perform the work specified in this section

D. SPECIFICATION(S)
   1. The following construction, testing, and reporting specifications within this document (Section 02814).

E. DRAWINGS
   1. The plan titled "Newton South High School Athletic Campus Renovation Project, Newton, MA," and sheets titled "Irrigation Plan" and "Irrigation Details" as drafted by Irrigation Consulting, Inc.
   2. All proposed well, pipe, road crossings, and existing electrical transformers are shown diagrammatically on the plan. Locations of proposed work shall be coordinated with Owner's Representative on-site.

1.03 WORK TO BE PERFORMED

A. Work to be done includes furnishing all labor, materials, equipment, and services (development and testing) required for construction of TWO (2) unconsolidated irrigation wells.

B. Irrigation well construction consists of:
   1. initial boring, sampling, and observation
   2. drilling operation
   3. installing the casing
   4. installing the well screen
   5. developing the well naturally or through filter pack (if required)
   6. simultaneous testing for yield, drawdown, and water quality
   7. monitoring drawdown in remote observation well
   8. protecting the quality of the aquifer(s)

C. Yield is based on the assumption that each well shall be developed to meet the requirements for the irrigation systems in their immediate vicinities. Target minimum sustainable yield in gallons per minute (gpm) for each proposed well (as shown on the Drawings) shall be:
   1. Well #1 = 60 gpm (pumped simultaneously with Well #2)
   2. Well #2 = 60 gpm (pumped simultaneously with Well #1)

D. Drawdown monitoring and recording in remote observation wells is required at:
   1. Monitoring Well #1 (MW#1 as shown on the Drawings).

E. The location of proposed irrigation well work shall be as directed by the Owner's Representative and as approximately shown on the Drawings.

F. All materials to be incorporated in the well system shall be new and without flaws or defects and of the quality and performance as specified and meeting the requirements of the specifications. All material overages at the completion of the installation are the property of the Contractor and shall be removed from the site.

G. The Drawings and Specifications must be interpreted and are intended to complement each other. The Contractor shall furnish and install all parts that may be required by the Drawings and omitted by the Specifications, or vice versa, just as though required by both. Should there appear to be discrepancies or question of intent, the Contractor shall refer the matter to the Owner's Representative for decision, and his interpretation shall be final, conclusive, and binding.

H. The work shall be constructed and finished in every respect in a good, workmanlike, and substantial manner, to the full intent and meaning of the Specifications. All parts necessary for the proper and complete execution of the work whether the same may have been specifically mentioned or not, shall be done or furnished in a manner corresponding with the rest of the work as if the same were specifically herein described.

1.04 EXCLUSIONS

A. The following work is NOT INCLUDED with this Specification:
   1. Permanent pumps and drop pipe installation
   2. Permanent power units
   3. Well pump control panels
   4. Irrigation system and connection

B. The Contractor is responsible for providing his own equipment to install and test wells, namely:
   1. Portable power supply
   2. TWO (2) temporary submersible pumps and motors for simultaneous testing
   3. Valves
   4. Metering equipment

1.05 ORDINANCES, PERMITS, CERTIFICATIONS, AND INSPECTIONS

A. The work described herein shall comply with all ordinances and regulations of authorities having jurisdiction. This shall include all local, state, and federal regulations.

B. Obtain and pay for any and all additional permits, tests, and certifications required for the execution of work under this section.

C. Furnish copies of permits, certifications, and approval notices to Owner's Representative prior to requesting final payment.

1.06 EXAMINATION OF CONDITIONS

A. The Contractor shall fully inform himself of existing conditions on the site before submitting his bid, and shall be fully responsible for carrying out all work required to fully and properly executing the work of the Contract. No claim for extra compensation or extension of time will be allowed on account of actual conditions inconsistent with those assumed.

B. For bidding purposes, the well depths shall be 50 feet. Well depths in excess of 50 feet required to obtain the target yield shall be paid for on a per foot basis.
   1. Contractor to provide unit pricing per foot well drilling in overburden material on the included unit price form (see Bid Sheet).
   2. Overburden drilling for the wells shall be 10 inches in diameter.
   3. Well casing shall be 6 inches in diameter.

C. The Contractor shall drill preliminary boreholes and record information for the production wells in the location shown on the referenced Drawings. Any change to well locations delineated on the Drawings shall be coordinated with Engineer or Owner's Representative.

D. Access to the land immediately surrounding the well site will be granted with sufficient working space for the drilling operations.

E. The site shall be investigated by the Contractor prior to the start of drilling. The Contractor shall coordinate with the Owner's Representative and Engineer to inform and be informed of any hazards or obstructions which may affect the location of the production well, such as, but not limited to:
   1. Overhead power lines
   2. Buried cables
   3. Buried pipes
   4. Any known underground obstructions or contaminant not readily visible shall be identified

F. Avoid local depressions and low points which collect or convey surface runoff.

1.07 QUALITY ASSURANCE

A. Initial Subsurface Observation

1. A firm that has a least five (5) years experience in boring and subsurface exploration shall perform the initial observations required for the work of this Specification.
2. The person(s) supervising and recording information from the subsurface exploration shall be experienced and knowledgeable in soil classification and groundwater table determination. During soil boring, a sufficiently-sized soil sample (disturbed samples are acceptable) shall be taken at the proposed depth of well screen. Final boring logs shall be legibly printed or typed for review by Engineer. Contractor shall provide persons or entities to perform borings.
3. The soil samples shall be analyzed by a laboratory specializing in soil testing and analysis. The laboratory shall prepare a grain-size distribution and data tables to be reviewed by the Engineer for well screen selection.

B. Installer

1. A firm that has a least five (5) years experience in work of the size and type required by this Specification and which is acceptable to the Owner's Representative.
2. The persons supervising and constructing the proposed work of this Specification shall be personally experienced in well construction and shall have been regularly employed by a company engaged in well construction for three (3) years minimum.
3. Furnish to the Engineer the names and addresses of five (5) similar projects with the persons or entities installing and testing wells over the past three (3) years (see Bid Sheet).

C. Disinfection

1. Conform to provisions of AWWA Standards A-100 and C-654 except where modified herein.
2. Maintain a copy of these standards at all times on the job site.

D. Applicable requirements of accepted Standards and Codes shall apply to the Work of this Specification:

1. American Society for Testing & Materials (ASTM)
2. National Plumbing Code (NPC)
3. National Electric Code (NEC)
4. National Sanitary Foundation (NSF)
5. American Water Works Association (AWWA)
6. American Society of Agricultural and Biological Engineers (ASABE)
7. National Groundwater Association (NGWA)

1.08 DELIVERY, STORAGE, AND HANDLING

A. Store and handle all materials in compliance with manufacturer's instructions and recommendations. Protect from all possible damage. Minimize on-site storage.

1.09 GUARANTEE

A. The Contractor shall obtain in the Owner's name the standard written manufacturer's guarantee of all materials furnished under this Specification where such guarantees are offered in published product data.

B. All manufacturers' guarantees shall be in addition to, and not in lieu of, other liabilities, which the Contractor may have by law.

C. In addition to the manufacturers guarantees the Contractor shall warrant the entire irrigation system, both parts and labor for a period of one (1) year from the date of acceptance by the Owner.

D. Should any problems develop within the warranty period because of inferior or faulty materials or workmanship, they shall be corrected to the satisfaction of the Engineer at no additional expense to the Owner.

E. A written warranty showing date of completion and period of warranty shall be supplied upon completion of the project.

1.10 COORDINATION

A. The Contractor should at all times coordinate his work closely with the Engineer and Owner's Representative to avoid misunderstandings and to efficiently bring the project to completion. The Contractor shall also coordinate his work with any approved sub-contractors and other trades working on-site.

B. The Contractor shall be held responsible for and shall pay for all damage to other work caused by his work, workmen or sub-contractors. Repairing of such damage shall be done by the Contractor who installed the work, as directed by the Owner's Representative.

1.11 INSTALLATION SUBMITTALS

A. The Contractor shall provide three (3) copies on all proposed equipment to be installed to the Owner's Representative for approval by Engineer.
B. No well installation shall commence until all product sheets are received and approved.
C. Product data shall contain size, manufacturer, weight, description, etc.
D. Equipment to be submitted, but not limited to, includes:
   1. Well Casing
   2. Well Screen
   3. Sanitary Well Seal
   4. Drive Shoe (if required)
   5. Filter Pack (if required)
   6. Miscellaneous Materials

1.12 AS-BUILT SUBMITTALS

A. Upon completion of work and prior to application for acceptance and final payment, a minimum of two (2) three-ring binders titled IRRIGATION WELL AS-BUILT DATA FOR THE NEWTON SOUTH HIGH SCHOOL ATHLETIC FIELDS shall be submitted to the Owner's Representative for approval which includes:
   1. Boring Logs
   2. Well Installation Logs and Data
   3. Monitor Well Installation Logs and Data
   4. Yield Test Data (as specified herein)
   5. Approved Submittals for all products used in well construction
   6. Manufacturers' guarantees (if applicable)
B. As-Built Report Binders shall be completed and submitted within seven (7) days of the final well installation. Other trades and specifications require this final data to begin additional phases of this project.

PART 2 – PRODUCTS

2.01 GENERAL

A. Use only new materials conforming to the standard(s) applicable to each type, as specified and approved by the Engineer. Provide listed manufacturer's products specified, unless approved equals are specified.
B. For warranty purposes, equipment shall be supplied from authorized distributors of the various products.

2.02 WELL CASING

A. Well casing shall be Schedule 40 seamless steel pipe rated for well casing as per AWWA standards.
B. Casing shall be nominally 6-inch in diameter with minimum thickness of ¼-inch.
C. Steel pipe shall conform to ASTM A-53, A-106, A-120, and API-5L as manufactured by U.S. Steel or approved equal.

2.03 WELL SCREEN

A. Continuous-slot well screen shall be made entirely of stainless steel with triangular-shaped wire wrapped around an array of rods joined by resistance welding.
B. Screen length shall be determined upon receipt of laboratory grain-size analysis and selected by the Engineer.
C. Nominal screen size shall be sized equal to the nominal well casing size (6 inches). Screen may be welded to casing or sealed to casing by sand-tight neoprene K-packer. Submit well packer proposed for use (if required) with other equipment submittals. LEAD PACKERS WILL NOT BE ACCEPTED.
D. Final screen slot size shall be made by Engineer upon receipt of laboratory grain-size analysis. Slot size will be selected to permit 60% of the aquifer material to pass through the screen. The laboratory sieve analysis shall provide the D_{60} in inches (particle diameter where 60% of the sample is finer) for the soil sample taken within the screen depth.
E. Well screen shall be as manufactured by Johnson Screens, Roscoe Moss Company, or approved equal.

2.04 SANITARY WELL SEAL

A. Sanitary well seal shall be installed at the top of the well. Well seal shall utilize two 3/16-inch stainless steel plates with a 3/4-inch expansion seal.
B. Well seal shall have a hole for the pump pull pipe and one for the electrical wiring.

C. Sanitary seal shall be minimum 6 inches (nominal to match well casing).

2.05 OPTIONAL MATERIALS

A. Filter Pack
1. A filter pack shall be installed to stabilize the well bore and serve as a filter if the well bore is not stable/or requires filtration.
2. The aggregate shall be uniformly graded.
3. Filter material to fill the annular space shall be silica-based material and shall be clean.
4. The grain size shall be such that the D_{50} of the filter pack is six (6) times larger than the D_{50} of the aquifer (to be determined from laboratory sieve analysis).
5. The thickness of the filter pack shall be two (2) inches.
6. The pack material shall extend through the entire aquifer exposed to the well bore.
7. The pack material shall be composed of well-rounded, smooth, water-insoluble, and non-acid soluble particles.

B. Bentonite Seals
1. A bentonite seal shall be installed to separate the filter pack and grout seal if a filter pack is required at a minimum of 2 feet in depth.
2. Bentonite, in pourable pellet form, shall be placed in the annular space (2 inches thick) above the filter pack through a tremie pipe before the grout seal is placed.

PART 3 – EXECUTION

3.01 GENERAL

A. Examine all contract documents applying to this Specification noting any discrepancies and bringing same tot the attention of the Engineer for timely resolution.
B. Make all field measurements necessary for the work noting the relationship of the well work to the other trades (coordinate with Owner's Representative).
C. At all times, protect existing utilities, landscaping, paving, structures, walls, footings, etc. from damage. Any inadvertent damage to the work of another trade shall be reported at once.
D. Well construction, well development, well testing, and test well abandonment shall be in strict accordance with ASABE EP 400.2T JAN 1994 (R2005) "Design and Constructing Irrigation Wells".
E. All equipment and materials shall be placed in the well in a manner, which meets design specifications, unless some good and sufficient reason is encountered during construction to deviate from design specifications. The Contractor, the Engineer, and the Owner's Representative shall mutually agree upon changes. A written record shall be maintained.

3.02 INITIAL OBSERVATION

A. Review all site plan Drawings and other documents pertaining to the proposed well locations. Coordinate with Owner's Representative to identify and/or mark out potential underground infrastructure and hazards. If necessary, call 1-888-DIG-SAFE to verify and mark underground utilities in the immediate vicinity.
B. Conduct one (1) soil boring at each approximate proposed well location. The pertinent information to obtain with each soil boring shall be:
1. depth to groundwater table
2. soil classification every 10 feet depth intervals for entire unconsolidated formation
3. to ensure that boulders or other refusal layers are not encountered
4. retrieve soil sample (undisturbed not necessary) from proposed well screen depth (approximately 40 feet below ground surface)
   a. Borings must be a minimum of 50 feet deep below the ground surface without encountered refusal to constitute a suitable potential well site.
   b. Contractor and Owner's Representative shall instruct boring operator to redo borings in another location if minimum depth cannot be met.
   c. Contractor shall mark boring locations as well construction site
C. Send retrieved soil samples to laboratory capable of providing full graphical and tabular grain-size distribution from sieve analysis.
D. Send laboratory sieve analysis and boring logs to Engineer to coordinate well construction and development

3.03 WELL CONSTRUCTION AND DEVELOPMENT

A. Contractor shall construct and develop two (2) 6-inch (minimum) unconsolidated wells. Proposed wells as located on the Drawings and marked in the field from boring tests shall be developed so as to produce the required yields described above (see 1.02C).

B. Borehole
   1. The borehole shall be round, plumb, straight, and of adequate diameter to permit satisfactory and proper installation of the inlet, well casing, screen, and filter pack material (if required).

C. Screen
   1. The well screen shall be handled carefully and placed at the correct depths to match the sampled formations.
   2. When the well is to be packed, the entire length of the inlet screen shall be centered in the borehole by the placement of centering guides at vertical intervals of five (5) feet to insure that the pack material will fill the entire intake area uniformly. The centering guides shall be placed at 90 degrees apart circumferentially.

D. Casing
   1. Well casing shall be plumb and straight such that it shall not deviate from vertical by more than two-thirds the casing diameter per 100 feet of depth.
   2. Use drive shoes as required (submit product specifications to Engineer).
   3. Well casing shall be cut off a minimum of 12 inches above finish grade but no more than 24 inches.
   4. A circular hole, 3 inches in diameter, shall be provided five (5) feet below the finish grade elevation for the purpose of connecting irrigation mainline to well discharge.

E. Well Development
   1. Development of unconsolidated wells shall remove fine material from the formation near the well screen, thereby opening passages for water to enter the well more freely.
   2. All fine material pulled into wells during the developing operation (surging and pumping) shall be removed from the well before yield test. The well shall be sufficiently developed to assure no water turbidity and sand pumping.
   3. The ideal development of wells shall be natural (i.e. without filter pack). If, however, the well bore is unstable, a filter pack is required and well development will ensue utilizing this additional material.
   4. Notify Engineer and Owner's Representative once well construction and development has been completed prior to yield testing.

F. Aquifer Protection
   1. Well bore and drilling equipment shall be disinfected with a chlorine solution to destroy any bacteria introduced during the construction and development processes.
   2. Chlorine solution shall have a minimum of 100 mg/L (100 ppm) available chlorine in solution when mixed with the volume of water in the well bore. The well shall then be properly capped for protection.
   3. A formation seal shall be provided around the well casing made of cement grout, bentonite, or concrete.
   4. The formation seal placed in an annular space shall prevent the seepage of contaminated surface water down along the outside of the casing into the well (approximately 1 inch thick).
   5. The surface sealing shall extend approximately three (3) feet below the ground surface or to the natural groundwater level—whichever is less,
   6. The finished land surface shall be graded to direct runoff water away from the well site.

G. Construction Certification
   1. A certification that the well was constructed in such a manner as to satisfy all original design specifications shall be given unless the specifications were modified in writing by prior and mutual agreement.
   2. Certification shall include a full construction log detailing well depth, screen size and depth, development method, and GPS coordinates (latitude and longitude). Fill out DCR Well Completion Form legibly and in entirety.
   3. Any modifications of the original Specification shall be included in the certification.

3.04 WATER QUALITY TEST

A. Upon completion of the well development and disinfection, the Contractor shall take water sample or physical, chemical, and bacteriological analysis. The sample shall be taken in the presence of the Owner's Representative.

B. The Contractor shall make all necessary arrangements and promptly send samples either to a local Health Department laboratory or to a private laboratory that is approved by the local Health Department.

C. The water quality analysis shall be conducted in accordance with standards and methods approved by the local and State Health Departments, as well as the United States Environmental Protection Agency. The analysis shall include testing for the following:

1. Arsenic
2. Boron
3. Beryllium
4. Bicarbonate (HCO_3)
5. Cadmium
6. Calcium
7. Carbonate (CO_3)
8. Chromium
9. Copper
10. Iron
11. Lead
12. Magnesium
13. Manganese
14. Mercury
15. Potassium
16. Sodium
17. Selenium
18. Zinc
19. Chloride
20. Sulfate
21. Nitrate
22. Nitrite
23. Turbidity
24. Total Coliform Bacteria
25. pH
26. Hardness
27. Alkalinity (all forms)
28. Total Dissolved Solids
29. Electrical Conductivity

D. The analysis must report the constituents enumerated above. An incomplete analysis will be rejected.

3.05 YIELD AND DRAWDOWN TESTING

A. Each well shall have three (3) phases of mandatory testing:

1. Step drawdown test
2. 8-hour pumping yield test
3. Recovery test

B. Testing at Well #1 and Well #2 shall be simultaneously performed. Testing at remote monitoring well location shall also be performed simultaneously and include level reading during pump tests for potential influence on surrounding resource areas.

C. Prior to commencement of testing, ensure that pump discharge is directed away from the recharge zone surrounding the well (coordinate with Owner's Representative or local permitting agencies).

D. Step Drawdown Test (Both Wells Simultaneously)

1. Set temporary submersible pumps in wells at depths to be specified
2. Record static water levels
3. Begin pumping at 50% of required yield
4. Record drawdown at the following intervals:
   a. Every minute for the first 10 minutes after pumping starts
   b. Once every 10 minutes from 10 minutes to 60 minutes
5. Increase pumping rate to 100% of required yield
6. Record drawdown at the following intervals:
   a. Every minute for the first 10 minutes after pumping starts
   b. Once every 10 minutes from 10 minutes to 60 minutes
7. Increase pumping rate to 150% of required yield
8. Record drawdown at the following intervals:
   a. Every minute for the first 10 minutes after pumping starts
   b. Once every 10 minutes from 10 minutes to 60 minutes

9. Stop step drawdown test and allow well to recover to steady-state conditions. Record time to recovery.
10. If at any point the tested flow rate cannot be sustained (as observed by rapid drawdown to the pump inlet), reduce flow rate and restart recording interval.

E. Yield Tests (Both Wells Simultaneously)
1. Set temporary submersible pumps in wells at depths to be specified
2. Record static water level
3. Begin pumping at required yield
4. Adjust pumping rates accordingly and as noted recording changes and times
5. Record drawdown at the following intervals:
   a. Every minute for the first 10 minutes after pumping starts
   b. Once every 10 minutes from 10 minutes to 120 minutes
   c. Once every 30 minutes from 120 minutes to 480 minutes
6. If the yield test is stopped for more than 15 minutes, the test must be abandoned and started from the beginning allowing well to recover—THE COST OF TIME AND MATERIALS TO RESET TEST SHALL BE AT THE CONTRACTOR'S EXPENSE.

F. Recovery Tests
1. At the conclusion of the yield tests, immediately begin recording well recovery depths from the time the pumps are shut off.
2. Recovery testing shall continue until 95% of the well has recovered or four (4) hours, whichever is shorter—NO EXCEPTIONS.
3. Record recovered water levels at the following intervals:
   a. Every minute for the first 10 minutes after pumping starts
   b. Once every 10 minutes from 10 minutes to 120 minutes (or until 95% recovery)
   c. Once every 30 minutes from 120 minutes to 240 minutes (or until 95% recovery)

G. Monitor Well Tests
1. Conduct monitor well drawdown testing SIMULTANEOUSLY with yield testing.
   a. Observe Existing Monitor Well #MW1 during Well #1 yield test
2. Record monitor well drawdown SIMULTANEOUS with irrigation well yield testing at the following intervals:
   a. Every minute for the first 10 minutes after pumping starts
   b. Once every 10 minutes from 10 minutes to 120 minutes
   c. Once every 30 minutes from 120 minutes to 480 minutes
3. Record monitor well recovery SIMULTANEOUS with irrigation well recovery at the following intervals
   a. Every minute for the first 10 minutes after pumping starts
   b. Once every 10 minutes from 10 minutes to 120 minutes
   c. Once every 30 minutes from 120 minutes to 240 minutes

H. Data Reports
1. Present drawdown and recovery data in legible (typed notes preferred) report with time and flow rates reported in corresponding columns for all wells.

3.06 ACCEPTANCE AND OPERATION

A. Upon completion of the work and acceptance by the Engineer and Owner's Representative, the Contractor shall be responsible for providing all specified information in the as-built binder.
B. The contractor shall guarantee all parts and labor for a minimum period of one (1) year from the date of acceptance.

3.07 CLEAN UP

A. Upon completion of all installation work, Contractor shall remove all leftover materials and equipment from the site in a safe and legal manner.
B. Contractor shall leave the site clean and free of all debris generated from installation of the irrigation wells.

END OF SECTION

G:\713050\Specs\newton so hs_complete spec.doc

BID SHEET TO CONSTRUCT IRRIGATION WELLS (UNIT PRICING SHEET)

The following unit prices, to be filled out by all bidders, shall be used for additions or deletions to the irrigation well construction due to actual site conditions. Prices shall include said material and installation labor and necessary equipment costs complete in place, along with any applicable taxes, supervision, and deliver charges.

No.	Quantity	Description		Unit Price
1	1 Day of Boring Crew	Test Boring Crew to Conduct a Maximum Four (4) Borings at Irrigation Wells (Classify, Sample, Groundwater, Report)	$	/ day
2	1 Set of Lab Analyses	Laboratory Grain-Size Analysis for Two (2) Samples Collected from Borings with Sieve Plots and Reports	$	/ analysis
3	100 feet	10-Inch Drilling in Overburden for Two (2) 50-foot deep Irrigation Wells	$	/ lf
4	20 feet	Two (2) 10-foot 6-inch Steel Well Casings for Irrigation Wells	$	/ lf
5	80 feet	Two (4) 40-foot 6-inch Stainless Steel Well Screens for Irrigation Wells	$	/ lf
6	100 feet	2-inch Thick Filter Pack for Irrigation Wells (If Required)	$	/ lf
7	10 feet	2-Inch Thick Bentonite Seal (If Required)	$	/ lf
8	As Required	Other Products Required for Well Installation (Outlined in Specification or Otherwise) List Products Below:		
		_____	$	/ unit
		_____	$	/ unit
		_____	$	/ unit
9	2 Wells	Natural Development, Sediment Removal, and Disinfection of Two (2) Irrigation Wells	$	/ well
10	32 hours (Maximum)	16-Hour Well Testing with Temporary Test Pumps for Two (2) Wells: (Step-Drawdown, Yield, and Recovery)	$	/ hour
11	16 hours (Maximum)	16-Hour Drawdown Recording for One (1) Monitor Well: (Simultaneous During Step, Yield, and Recovery Testing)	$	/ hour

(next, please)

BID SHEET TO CONSTRUCT IRRIGATION WELLS (TOTAL BID PRICE SHEET)

TOTAL BID PRICE FOR ITEMS 1 – 11 ABOVE: $_____

TOTAL BID PRICE WRITTEN IN WORDS: _____

_____

_____

CONTRACTOR NAME _____

CONTRACTOR ADDRESS _____

_____

_____

CONTRACTOR PHONE NUMBER _____

CONTRACTOR FAX NUMBER _____

CONTRACTOR SIGNATURE _____

SIGNATURE DATE _____

PRINTED NAME OF SIGNER _____

CONTRACTOR POSITION IN COMPANY _____

CHAIN LINK FENCE & GATES

SECTION 02831

PART 1 - GENERAL

1.01 GENERAL PROVISIONS

A. Attention is directed to the CONTRACT AND GENERAL CONDITIONS and all Sections within DIVISION 01 - GENERAL REQUIREMENTS which are hereby made a part of this Section of the Specifications.

1.02 WORK INCLUDED

A. Provide all labor, equipment and materials for the installation of all fences, backstops, line posts, end posts, rails, fabric and gates as designated on the Contract Drawings

1.03 RELATED WORK

A. Examine Contract Documents for requirements that affect work of this Section. Other Specification Sections that directly relate to work of this Section include, but are not limited to:

1. Section 02300 – Earthwork
2. Section 03300 – Cast-in-Place Concrete

1.04 REFERENCES

A. Comply with applicable requirements of the following standards. Where these standards conflict with other requirements, the most restrictive requirements shall govern.

AMERICAN SOCIETY FOR TESTING AND MATERIALS (ASTM)

ASTM A 53 Standard Specification for Pipe, Steel, Black and Hot-Dipped, Zinc-Coated, Welded and Seamless

ASTM A 123 Standard Specification for Zinc (Hot-Dip Galvanized) Coatings on Iron and Steel Products

ASTM A 153 Standard Specification for Zinc Coating (Hot-Dip) on Iron and Steel Hardware

ASTM A 176 (1994) Stainless and Heat-Resisting Chromium-Nickel Steel Plate, Sheet, and Strip

ASTM A 385 Standard Practice for Providing High-Quality Zinc Coatings (Hot-Dip)

ASTM A 392 (1991b) Zinc-Coated Chain-Link Fence Fabric

ASTM A 478 (1995a) Chromium-Nickel Stainless and Heat-Resisting Steel Weaving and Knitting Wire

ASTM A 491 (1994) Aluminum-Coated Steel Chain-Link Fence Fabric

ASTM A 666 (1994) Austenitic Stainless Steel Sheet, Strip, Plate, and Flat Bar

ASTM C 94 (1994) Ready-Mixed Concrete

ASTM F 626 (1994a) Fence Fittings

ASTM F 688 Poly (Vinyl Chloride) (PVC) and other Organic Polymer-Coated Steel Chain link fence fabric, Class 2B

ASTM F 883 (1990) Padlocks

ASTM F 900 (1994) Industrial and Commercial Swing Gates

ASTM F 1043 (1995) Strength and Protective Coatings on Metal Industrial Chain-Link Fence Framework

ASTM F 1083 (1993) Pipe, Steel, Hot-Dipped Zinc-Coated (Galvanized) Welded for Fence Structures

AMERICAN WELDING SOCIETY (AWS)

AWS WZC (1972) Welding Zinc-Coated Steels

1.05 SUBMITTALS

A. Submit shop drawings and manufacturer's specifications and installation instructions for all materials to be used including backstops and gate assembly.

B. Certificates: Statement signed by an official authorized to certify on behalf of the manufacturer attesting that the chain link fence and component materials meet the specified requirements.

PART 2 - PRODUCTS

2.01 MATERIALS

Materials shall conform to the following:

A. PVC Coated Fence Fabric

Fabric shall be PVC coated thermally fused and bonded to a primer which is thermally cured onto galvanized steel core wire conforming to ASTM F 668, Class 2b. Color of vinyl coating shall be black as specified in the plan set. Minimum coating thickness shall be 0.006 in. Color sample shall be submitted to the Owner for approval.

1. Fabric shall be woven into a two (2") inch mesh of 9-core gauge (or as noted on drawings) galvanized wire with a minimum breaking strength of 1290 lbs. In accordance with ASTM F 668, Class 2b.

   Zinc for galvanized coating shall conform to ASTM B 6, galvanized by hot dipped method AISI Type I, before vinyl coating; coating shall be smooth. Minimum weight of zinc coating shall be 1.2 oz. per sq. ft.

   Polyvinyl chloride coating shall meet the following requirements.

   a. Specific gravity shall be 1.30 maximum, tested in accordance with ASTM D 792.

   b. Hardness shall have a minimum Durometer reading of A 95 in accordance with ASTM D 2240. Ultimate elongation shall be 275% in accordance with ASTM D 412.

2. Tensile strength shall have a test minimum of 3,300 psi in accordance with ASTM D 412.

3. Vinyl shall be a dense and impervious covering free of voids, having a smooth, lustrous surface without pinholes, bubbles, voids, or rough or blistered surface.

B. Fence Posts, Hardware, and Fittings - General

Fittings shall be of best quality malleable iron castings, wrought iron forgings, or pressed steel and provided with pin connections. Equipment shall be designed to carry 100% overload.

1. Malleable iron castings shall be hot-dipped galvanized in accordance with ASTM A 153.

2. Wrought iron forgings or pressed steel fitting and appurtenances shall be hot-dipped galvanized in accordance with ASTM A 123.

3. Fence Hardware Coatings: shall match fence fabric coating.

Piping for fence posts shall be steel conforming to ASTM A 53 except that pipe shall be unthreaded and untested for water pressure.

Galvanized items shall be galvanized in accordance with ASTM A 123, A 153, or A 385, as applicable.

Bolts, which are installed six (6') feet or less above grade shall not protrude more than ¼ in. beyond the nut after tightening. Rough edges shall be filed smooth to the satisfaction of the engineer. Peen ends of all bolts after tightening.

C. Posts

4 ft., 6 ft. and 8 ft. High Fence:

1. Line posts shall be 2.375 in. O.D., Schedule 40 pipe weighing 3.56 lb./ft.

2. End and corner posts shall be 3.0 in. O.D. Schedule 40 pipe weighing 5.79 lb./ft.

Gatepost for gate leaf 6 ft. wide and less shall be 3.0 in. O.D. Schedule 40 pipe weighing 5.79 lb./ft.

Posts shall be PVC coated thermally fused and bonded to a primer which is thermally cured onto galvanized steel posts. Color of vinyl coating shall be black. Minimum coating thickness shall be 0.006 in.

D. Rails and Post Braces

Top rail, mid rail (where required) and Bottom rails shall be 1.66 in. O.D., Schedule 40 pipe weighing 2.27 lb./ft.

Rails and post braces shall be PVC coated thermally fused and bonded to a primer which is thermally cured onto galvanized steel rails and post braces. Color of vinyl coating shall be black as specified in the plan set. Minimum coating thickness shall be 0.006 in.

E. Gates and Gate Frames

Fabrication: Assemble gate frames by welding connections. Use same fabric as for fence, unless otherwise indicated. Install fabric with stretcher bars at edges, (and tie wire at top and bottom edges, if stretcher is not used). Attach stretcher bars to gate frame at not more than 12 in. O.C. Attach hardware with rivets or by other means, which will provide security against removal or breakage.

1. Framing:

a. Fabricate perimeter frames of minimum 1.90 in. O.D. Schedule 40 pipe, hot-dip galvanized with a minimum 2.0 oz. zinc per sq. ft. of surface area.

2. Bracing:

Provide diagonal cross bracing consisting of 3/8 in. diameter adjustable length truss rods on gates where four sided tension rods are not used. Provide frame rigidity without sag or twist.

Gate hardware: Galvanize per ASTM A 153 (each gate).

F. Gate Hardware Coatings: shall match fence fabric coating.

1. Hinges: Pressed steel or malleable iron to suite gate size, non-lift-off type, offset to permit 180° gate opening. Provide one pair of hinges for each leaf.

2. Latch: Forked type to permit operation from either side of gate: Provide padlock eye as integral part of latch.

3. Keeper: Provide keeper for gates, which automatically engages the gate leaf and holds it in the open position until manually released.

Gates and gate frames shall be PVC coated thermally fused and bonded to a primer, which is thermally cured onto galvanized steel components. Color of vinyl coating shall be black as specified in the plan set. Minimum coating thickness shall be 0.006 in.

G. Stretcher Bars

Stretcher bars shall not be less than 3/16 in. x ¾ in. and be full height of the fabric with which they are being used.

1. Provide stretcher bars for each gate, end, corner, and pull post stretcher bar bands and clips shall be heavy pressed steel, or malleable iron.

H. Caps

Posts shall have caps, which shall be designed to exclude water from post. Caps shall have holes suitable for the through passage of the top rail where necessary.

Caps for 4ft. high posts shall be PVC coated thermally fused and bonded to a primer, which is thermally cured onto galvanized steel caps. Color of vinyl coating shall be black as specified in the plan set. Minimum coating thickness shall be 0.006 in.

I. Tension and Tie Wire

PVC Coated Fence: Tie wire shall be 9-gauge O.D. vinyl-clad galvanized steel wire.

J. Galvanized Paint

Cold galvanized paint shall be one of the following:

Product	Manufacturer
Galvicon	Galvicon Corporation
Zinc Shield	Stanley Chemical Division of The Stanley Works

Touch-up for Galvanized Surfaces: Touch-up damaged or abraded galvanized surfaces with products equal to one of the following:

1. Cold Galvanizing Compound; ZRC.

2. Speedhide Galvanized Steel Paint; PPG.

3. Series 90-97 Zinc-Rich Primer; Tnemec.

K. Concrete

ASTM C 94, using ¾ inch maximum size aggregate, and having minimum compressive strength of 3000 psi at 28 days. Grout shall consist of one part Portland cement to three parts clean, well-graded sand and the minimum amount of water to produce a workable mix.

PART 3 - EXECUTION

3.01 GENERAL

A. Fence shall be installed to the lines and grades indicated. The area on either side of the fence line shall be cleared to the extent indicated. Line posts shall be spaced equidistant at intervals not exceeding 10 feet. Terminal (corner, gate, and pull) posts shall be set at abrupt changes in vertical and horizontal alignment. Fabric shall be continuous between terminal posts; however, runs between terminal posts shall not exceed 500 feet. Any damage to galvanized surfaces, including welding, shall be repaired with paint containing zinc dust in accordance with ASTM A 780.

3.02 POSTS

A. Posts shall be cored into the proposed concrete anchor curb as shown on the plans and details.

3.03 RAILS

A. Top Rail, Mid (where required) and Bottom Rails

Top, mid (where required) and bottom rails shall be supported at each post to form a continuous brace between terminal post. Where required, sections of top rail shall be joined using sleeves or couplings that will allow expansion or contraction of the rail.

3.04 BRACES AND TRUSS RODS

A. Braces and truss rods shall be installed as indicated and in conformance with the standard practice for the fence furnished. Braces and truss rods shall extend from terminal posts to line posts. Diagonal braces shall form an angle of approximately 40 to 50 degrees with the horizontal. No bracing is required on fences six feet high or less if a top rail is installed.

3.05 CHAIN LINK FABRIC

A. Chain link fabric shall be installed on the playing field side of the fence. Fabric shall be attached to terminal posts with stretcher bars and tension bands. Bands shall be spaced at approximately 15-inch intervals. The fabric shall be installed and pulled taut to provide a smooth and uniform appearance free from sag, without permanently distorting the fabric diamond or reducing the fabric height. Fabric shall be fastened to line posts at approximately 14-inch intervals and fastened to all rails at approximately 12-inch intervals. Fabric shall be cut by untwisting and removing pickets. Splicing shall be accomplished by weaving a single picket into the ends of the rolls to be joined. Top and bottom of installed fabric shall be as indicated on the Drawings. After the fabric installation is complete, the fabric shall be exercised by applying a 50-pound push-pull force at the center of the fabric between posts. The use of a 30-pound pull at the center of the panel shall cause fabric deflection of not more than 2.5 inches when pulling fabric from the post side of the fence. Every second fence panel shall meet this requirement. All failed panels shall be resecured and retested at the Contractor's expense.

3.06 GATES

A. Gates shall be installed plumb, level and secure at the locations shown. Hinged gates shall be mounted to swing as indicated. Latches, stops, and keepers shall be installed as required. Slide gates shall be installed as recommended by the manufacturer. Hinge pins, and hardware shall be welded or otherwise secured to prevent removal.

3.07 TOUCH UP

A. Following installation scratches and marred spots in vinyl-coated surfaces shall be field coated with a vinyl coating supplied by the fence manufacturer.

B. Following installation scratches and marred spots in galvanized surfaces shall be power wire brushed and painted with a cold-applied galvanized paint at a rate of 2 oz. zinc per sq. ft. of surface.

3.08 GROUNDING

A. Electrical equipment attached to the fence shall be grounded as specified in manufacturer's instructions. Fences shall be grounded on each side of all gates, at each corner, at the closest approach to each building located within 50 feet of the fence, and where the fence alignment changes more than 15 degrees. Grounding locations shall not

exceed 650 feet. Each gate panel shall be bonded with a flexible bond strap to its gatepost. Fences crossed by power lines of 600 volts or more shall be grounded at or near the point of crossing and at distances not exceeding 150 feet on each side of crossing. Ground conductor shall consist of No. 8 AWG solid copper wire. Grounding electrodes shall consist of No. 8 AWG solid copper wire. Grounding electrodes shall be ¾ inch by 10-foot long copper-clad steel rod. Electrodes shall be driven into the earth so that the top of the electrode is at least six inches below the grade. Where driving is impracticable, electrodes shall be buried a minimum of 12 inches deep and radially from the fence. The top of the electrode shall be not less than two feet or more than eight feet from the fence. Ground conductor shall be clamped to the fence and electrodes with bronze grounding clamps to create electrical continuity between fence posts, fence fabric, and ground rods. After installation, the total resistance of fence to ground shall not be greater than 25 ohms.

END OF SECTION

G:\713050\Specs\newton so hs_complete spec.doc

TOPSOIL

SECTION 02920

PART 1 - GENERAL

1.01 GENERAL PROVISIONS

A. Attention is directed to the CONTRACT AND GENERAL CONDITIONS and all Sections within DIVISION 01 - GENERAL REQUIREMENTS which are hereby made a part of this Section of the Specifications.

1.02 SUBMITTALS

In accordance with Section 01300 - SUBMITTALS.

A. Submit soil analysis report for imported topsoil or amended on-site topsoil from an approved soil testing laboratory. Report shall cover soil textural classification (percentages of sand, silt, and clay) and include additive recommendations.

B. Submit particle size distribution analysis (Test Method ASTM D 422 or F 1632) of sand to be used in the sand based rootzone.

1.03 PRODUCT HANDLING

Do not deliver topsoil in frozen, wet, or muddy condition.

PART 2 - MATERIALS

2.01 ON-SITE TOPSOIL

A. All topsoil that is stripped from the existing site and stockpiled on-site may be reused as topsoil after being screened to ½-inch minus. Existing topsoil to be re-used and blended into the rootzone mix must be tested by an approved testing agency for required blending mix, soil amendments and approved by the Engineer.

2.02 IMPORTED TOPSOIL (Disturbed Areas/Non-Athletic Field Areas)

A. If imported topsoil is required it shall be friable loam, typical of fertile local topsoil; free from pure clay, weeds, noxious weed seeds, sod, clods and stones larger than 3/8 inch, toxic substances, litter, or other deleterious material; having a mildly alkaline to medium acid pH between 5.6 and 7.6. Soluble salts shall not exceed 4 milli-mhos per centimeter.

B. Soil Texture: 0% Greater than 3/8”, Sand, less than 52 percent; silt, 28 to 50 percent; clay, 7 to 27 percent.

C. Additives: As required by soil analysis.

D. Organic content shall be no less than 5% and no greater than 10%.

2.03 SAND-BASED ROOT ZONE MIX (athletic field areas)

A. Material shall be free from pure clay, weeds, noxious weed seeds, sod, clods and stones larger than 3/8 inch, toxic substances, litter, or other deleterious material.

B. Soil Texture: 0% Greater than 3/8”, Sand, 60-75 percent; Silt, 10 to 25 percent, Clay, 0 to 8 percent.

a. Sand shall be quartz sand and contain no more that 5% calcium carbonate equivalent and meet the following particle size distribution of sand.

Size Fraction	Partial Dia. Range	Specified Range (%)

Gravel	>4.75 mm	0%
Gravel	3.4 to 4.75 mm	<5%
Fine Gravel	2.0 to 3.4 mm	<20%
Very Coarse Sand	1.0 to 2.0 mm	<20%
Coarse Sand	0.5 to 1.0 mm	25 to 50%
Medium Sand	0.25 to 0.5 mm	>25%
Fine Sand	0.15 to 0.25 mm	<10%
Very Fine Sand	0.05 to 0.15 mm	<5%
Silt	0.002 to 0.05 mm	<5%
Clay	<0.002 mm	<3%

b. No more than 30% in the combined very coarse sand, fine gravel and gravel fractions.

c. At least 60% of the total sand should be in the combined medium sand and coarse sand fractions.

d. No more than 15% in the combined sand fraction less than 0.25 mm

e. The sand shall have a Coefficient of Uniformity ($CU=D_{60}/D_{10}$) value of 2.5 to 4.5

C. Contractor to apply limestone to achieve a pH of 6.0-6.5

D. The organic content shall be no less than 5% and no greater than 10% by dry weight.

E. Additives: As required by soil analysis.

PART 3 - EXECUTION

3.01 PLACING TOPSOIL

Scarify compacted subgrade to a 2-inch depth to bond topsoil to subsoil. Spread evenly and-grade to elevations and slopes shown. Hand rake areas inaccessible to machine grading. Use all on-site and regrade topsoil before importing topsoil.

END OF SECTION

G:\713050\Specs\newton so hs_complete spec.doc

PLANTING

SECTION 02931

PART 1 - GENERAL

1.01 GENERAL PROVISIONS

A. Attention is directed to the CONTRACT AND GENERAL CONDITIONS and all Sections within DIVISION 01 - GENERAL REQUIREMENTS which are hereby made a part of this Section of the Specifications.

1.02 RELATED WORK SPECIFIED ELSEWHERE

A. Section 02920 - Topsoil

1.03 REFERENCES

A. Plant Nomenclature: Conform to the latest edition of "Standardized Plant Names" as adopted by the American Joint Committee of Horticultural Nomenclature.

B. Size and Grading Standards: Conform to the current edition of "American Standard for Nursery Stock" - Sponsor - the American Association of Nurserymen Inc., unless otherwise specified.

1.04 SUBMITTALS

A. List of Plants: Before plant material is shipped to the project site, submit a complete itemized list of all plants including the source of supply.

B. Product Data: Furnish the following with each planting material delivery.

1. Invoice indicating sizes and variety of plant material.
2. Certificates of inspection required by state and Federal agencies.
3. Labels for each plant or bundles of plants indicating name and size.

C. Quality Control Submittals:

1. Worker's Qualifications Data: Names and addresses of 5 similar projects that each person has worked on during the past 2 years.

1.05 QUALITY ASSURANCE

A. Worker's Qualifications: The persons performing the planting and their supervisor shall be personally experienced in the planting and caring of plant material and shall have been regularly employed by a company engaged in the planting and caring of plant material for a minimum of 2 years.

B. Caliper trees up to 4 inches in caliber at a point 6 inches above ground and trees over 4 inches in caliber 12 inches above ground.

C. Do not use woody plant material from regions south of latitude 39 degrees unless such material has been lined out in nurseries located north of latitude 39 degrees for at least 2 growing seasons. Latitude 39 degrees is approximately a line from Annapolis, MD to Cincinnati, OH.

1.06 DELIVERY, STORAGE AND HANDLING

A. Notify the Engineer within 48 hours in advance of delivery of plant material.

B. Protect plants against climatic and mechanical injuries.

C. Deliver fertilizer in manufacturer's standard sized bags showing weight, analysis, and manufacturer's name. Store under a waterproof cover or in a dry place.

1.07 PROJECT CONDITIONS

A. Water will be furnished by the Owner from existing facilities as directed. Furnish hoses and connections required to adequately water plants.

1.08 SCHEDULING

A. Plant deciduous, woody plants between October 1 and May 15 whenever temperature is above 32 degrees F and soil is in workable condition, unless otherwise approved in writing.

B. Plant evergreens between August 15 and September 15 or during April or May before start of new growth.

1.09 PLANTING GUARANTEE

A. The guarantee shall extend for a period of one year from the date of physical completion. Physical completion for the Work of this Section is the date or dates when all the planting operations, or seasonal portions of the planting operations, or replacement planting operations have been completed and are accepted by the Landscape Architect.

PART 2 - PRODUCTS

2.01 PLANTS

A. Shrubs and Trees

1. Nursery grown stock unless otherwise indicated in the itemized plant list.
2. Acclimated plants true to genus and species.
3. Well developed root and branch systems. Do not prune branches before delivery.
4. Free of disease, insect eggs, bark abrasions, and disfiguring knots.
5. Buds intact and reasonably closed at time of planting.
6. Balled and burlapped from soil which will hold a natural ball. Manufactured balls are unacceptable.
7. Conform to size indicated or larger, or within the minimum maximum size when so indicated. Larger plants cut back to specified dimensions will not be accepted.

B. Trees

1. Single erect leader from ground to top, surrounded with uniformly arranged branches.
2. Free from frost cracks, broken bark, and dead or broken branches.
3. Transplanted, or root pruned 360 degrees at least once during the previous 3 years.

2.02 PLANTING SOIL

A. Topsoil for Planting Soil: Use approved topsoil stripped and stockpiled on the Site.

B. Soil Amendments (For every 4 cu yd of topsoil):

1. Peat Moss: 7-1/2 cu ft bale or 15 bushels (loose measure).
2. Fertilizer: 5 lb.
3. Bonemeal: 80 lb.

C. Place the soil amendments over the topsoil piles and turn over the combined elements a minimum of 3 times until thoroughly mixed.

2.03 FERTILIZER

A. Bonemeal: Commercial, steamed finely ground material containing not less than 1.0 percent nitrogen and 11 percent phosphoric acid.

B. Commercial Fertilizer (10-6-4): Containing not less than 10 percent nitrogen, 6 percent available phosphoric acid and 4 percent water soluble potash.

2.04 MULCH

A. Shredded Pine Bark: Wood fiber produced from pine trees, free of tannic acid, leaves, young green growth, wood shavings, sawdust or other objectionable foreign material.

2.05 MISCELLANEOUS MATERIALS

A. Stakes, Deadmen and Guy Stakes: Sound, durable White or Red Cedar, or other approved wood, free of insect or fungus infestation.

B. Guy Wire or Cable: No. 12 galvanized iron wire or cable.

C. Landscape Fabric: Typar Pro 3301, or equivalent.

PART 3 - EXECUTION

3.01 INSPECTION

A. Do not plant any plant material until after inspection and approval in writing of plant shipments. Secure written approval of any substitutions before planting. Remove rejected material from planting areas.

3.02 PREPARATION

A. Planting Layout:

1. Stake out tree locations and planting areas.
2. Obtain layout approval from the Director's Representative prior to excavations of plant pits and beds.

B. Plant Pit Dimensions: Minimum width 12 inches, measured at the ground surface.

1. Balled and Burlapped Plants:
   a. Pit Depth: Not to exceed the ball depth.
   b. Pit Width: Measured at the ground surface, 3 times the width of the ball or as indicated.
2. Container Grown Plants: 2 times the diameter of the container measured at the ground surface.
3. Ground Cover Beds: Excavate entire bed to a depth of 4 inches.
4. Bare Root Plants: Diameter equal to width of roots spread to natural position plus 24 inches, measured at the ground surface.
5. Hedge Trenches: 18 inches wide and 18 inches deep.

C. Excavation: Excavate pits to the dimensions specified. Dispose of excavated material of the site unless otherwise directed.

3.03 PLANTING

A. Setting Plants

1. Backfill pits with planting soil and firm to the level upon which plants were previously growing. Set plants plumb. Plant budded or grafted plants 2 inches below bud or graft line. Complete backfilling with planting soil and settle continually with water.
2. Balled Plants: Set plants in position and backfill 1/3 depth of ball. Remove burlap from top and adjust to eliminate air pockets. Complete backfill and settle with water.
3. Bare-root Plants: Set plant in position and place planting soil around roots settling with water. Use care to avoid bruising or breaking roots when firming soil. Prune bruised or broken roots.

B. Staking: Set tree stakes into solid ground below bottom of plant before backfilling. Place stakes at the outer edge of the roots or ball in line with the prevailing wind at a 10 degree angle from the tree trunk.

C. Mulching:

1. Spread mulch over finished surface of each plant, plant bed and hedge trench in the following amounts:
   a. Shredded Pine Bark: 3 inches.
2. Water plants thoroughly after mulching.

D. Pruning: Prune immediately after planting using sharp tools. Remove approximately 1/3 of the wood of deciduous plants, maintaining the natural habit of the plant. Cut no leaders. Paint pruning cuts 3 inches in diameter or over with tree wound paint.

E. Guying: Guy deciduous trees 4 inches and over in caliber; trees over 6 feet high with 3 or more stems; and evergreens 6 feet or over in height, with 3 guys immediately after planting. Attach guys to stakes and trees as indicated. Connect multi-stem trees with protected connecting wires maintaining each stems relationship to one another.

F. Establishment of Planting: Maintain plantings immediately following planting operations and continue throughout the guarantee period. Establishment of plantings shall consist of keeping plants in healthy, growing conditions by watering, weeding, cultivating, pruning, spraying, tightening of guys, remulching and by any other necessary operations of establishment. Water all plants at least once a week between April 1 and October 31 with approximately 5 gallons per square yard (1 inch layer of water) per watering unless otherwise directed. Provide additional watering during periods of dry weather when required or when directed. Treat plants with good horticultural preventative or remedial measures to control insects, diseases or rodents.

3.04 INSPECTIONS AND REPLACEMENTS

A. The following inspections apply only to this Section and supersede inspections specified in Section 01700.

1. Physical Completion Inspection and Replacements: Remove and replace dead, unhealthy or badly impaired plants according to the original specification, if so directed. Replace plants during the next planting season if this inspection is not within a planting season.
2. End of Guarantee Inspection and Replacements: Remove stakes, guy wires and tree wrapping at the end of the one year guarantee period unless otherwise directed. Remove and replace dead, unhealthy or impaired plants according to original specification, as directed. Replace plantings during the next planting season if end of guarantee period is not within a planting season.

END OF SECTION

G:\713050\Specs\newton so hs_complete spec.doc

SODDING

SECTION 02935

PART 1 - GENERAL

1.01 GENERAL PROVISIONS

A. Attention is directed to the CONTRACT AND GENERAL CONDITIONS and all Sections within DIVISION 01 - GENERAL REQUIREMENTS which are hereby made a part of this Section of the Specifications.

1.02 DESCRIPTION

A. The work of this section consists of the following:

1. Sodding of the natural turf softball field with natural turf multipurpose field in the outfield.

2. Natural turf baseball field, including infield area and all areas within the limits of the perimeter chain link fence.

1.03 REFERENCES

A. The publications listed below form a part of this specification to the extent referenced. The publications are referred to in the text by basic designation only.

AGRICULTURAL MARKETING SERVICE (AMS)

AMS-01 (Amended thru: August 1988) Federal Seed Act Regulations (Part 201-202)

AMERICAN SOCIETY FOR TESTING AND MATERIALS (ASTM)

ASTM D 977 (1991) Emulsified Asphalt

ASTM D 2028 (1976; R 1992) Cutback Asphalt (Rapid-Curing Type)

ASTM D 2607 (1969) Peats, Mosses, Humus, and Related Products

COMMERCIAL ITEM DESCRIPTIONS (CID)

CID A-A-1909 (Basic; Notice 1) Fertilizer

1.04 SUBMITTALS

A. The following shall be submitted in accordance with Section 01300-SUBMITTALS.

1. Manufacturer's Literature

Manufacturer's literature discussing physical characteristics, application and installation instructions for erosion control material, and for chemical treatment material.

2. Equipment List

A list of proposed seeding and mulching equipment to be used in performance of turfing operation, including descriptive data and calibration test.

3. Certificates

Certificates of compliance certifying that materials meet the requirements specified, prior to the delivery of materials. Certified copies of the reports for the following materials shall be included:

a. Seed Mix

b. Fertilizer

For chemical analysis, composition percent.

b. Agricultural Limestone

For calcium carbonate equivalent and sieve analysis.

c. Topsoil

For pH, particle size, chemical analysis and mechanical analysis.

d. Sod

For source, thickness and seed mix.

1.05 DELIVERY, INSPECTION, STORAGE, AND HANDLING

A. Delivery

1. Topsoil

A chemical analysis for topsoil shall be performed in accordance with specification section 02920 – Topsoil.

2. Soil Amendments

Soil amendments shall be delivered to the site in the original, unopened containers bearing the manufacturer's chemical analysis. In lieu of containers, soil amendments may be furnished in bulk. A chemical analysis shall be provided for bulk deliveries.

B. Inspection

Seed, fertilizer, and mulch shall be inspected upon arrival at the job site by the Owner's representative for conformity to type and quality in accordance with paragraph MATERIALS. Other materials shall be inspected for meeting specified requirements and unacceptable materials shall be removed from the job site. Turf areas found to be deficient shall be replanted with same material as originally specified.

C. Storage

Materials shall be stored in areas designated by the Owner and/or the Engineer. Seed, lime and fertilizer shall be stored in cool, dry locations way from contaminants. Chemical treatment materials shall not be stored with other landscape materials.

D. Handling

1. Materials

Except for bulk deliveries, materials shall not be dropped or dumped from vehicles. Deliveries shall be received in original, unopened containers with any pertinent information attached.

PART 2 - PRODUCTS

2.01 MATERIALS

A. Soil Amendments

Soil amendments shall consist of lime, fertilizer, organic soil amendments and soil conditioners meeting the following requirements.

1. Agricultural Limestone

Dolomitic limestone in which 98% pass a number 20 mesh sieve and at least 75% will pass through a number 100 sieve. The limestone will have a calcium carbonate equivalent of at least 85%. Application rate to be determined by soil test.

2. Fertilizer

a. The 10-20-10 and 15-15-15 fertilizers shall have all their nitrogen in a water soluble form derived from urea, ammonium nitrate, ammonium phosphate or similar material. Other grades with the same ratios may be substituted and their rates adjusted to supply 44 lbs. N per acre. Fertilizers delivered to the work site must be fully labeled in accordance with the State of Massachusetts Fertilizer Laws and Regulations.

B. Fertilizers

Grade	Application rate per acre
10-20-10	440 pounds - used in seeded areas
15-15-15	293 pounds - used in sodded areas
0-46-0	rate determined by soil test results

3. Phosphorous

If a soil test indicates that phosphorous is needed, apply to the area and work into the soil to a depth of 3 to 4 inches.

C. Sod

1. Sod Mixture

Kentucky Bluegrass blend, with a minimum of three varieties, specifically designed for athletic fields. Submit seed mix varieties for approval.

2. Sod shall be delivered to the site in rolls with a minimum width of 4 feet and supplier's standard length. Maximum allowable deviation from standard lengths and the 4 ft width shall be 5%.

3. The sod shall be machine cut and at a uniform soil thickness to a depth equal to the growth of the fibrous roots but in no case less than 3-inches (not including grass height).

4. Sod sections shall be strong enough to support their own weight and retain their size and shape when suspended vertically from a grasp on the upper 10 percent of the section.

D. Water

Water shall not contain elements toxic to plant life.

PART 3 - EXECUTION

3.01 SODDING TIMES AND CONDITIONS

A. Sodding Time

Sod shall be installed from 4/15 to 6/15 for spring planting and 8/15 to 10/15 for fall planting.

B. Turfing Conditions

Turf operations shall be performed only during periods when beneficial results can be obtained. When drought, excessive moisture or other unsatisfactory conditions prevail, the work shall be stopped when directed. When special conditions warrant, a variance to the turf operations, proposed times shall be submitted to and approved by the Owner's representative.

3.02 SITE PREPARATION

A. Grading

The topsoil shall be uniformly distributed on the designated areas. It shall be a minimum depth of 4 inches after firming. Spreading shall be performed in such a manner that turf grass sod installation can proceed with a minimum of additional soil preparation and tillage. Any irregularities in the surface resulting from top soiling or other operations shall be corrected in order to prevent the formation of depression or crowns. Topsoil shall not be placed while in a frozen or muddy conditions or when the sub-grade is excessively wet, or in a condition that may otherwise be detrimental to proper grading or proposed turf grass sod installation.

B. Application of Soil Amendments

1. Soil Test

Soil testing for all imported topsoil shall be performed in accordance with specification section 02920 – Topsoil.

2. Lime

Lime shall be applied at the rate recommended by the soil test. Lime shall be incorporated into the soil to a minimum depth of four (4) inches or may be incorporated as part of the tillage operation.

3. Fertilizer

Fertilizer shall be applied at the rate recommended by the soil test. Fertilizer shall be incorporated into the soil to a minimum depth of four (4) inches and may be incorporated as part of the tillage operation.

C. Tillage

1. Minimum Depth

Soil on slopes gentler than 3 horizontal to 1 vertical shall be tilled to a minimum depth of 4 inches. On slopes between 3 horizontal to 1 vertical and 1 horizontal to 1 vertical, the soil shall be tilled to a minimum depth of two (2) inches by scarifying with heavy rakes, or other method. Rototillers shall be used where soil conditions and length of slope permit. On slopes 1 horizontal to 1 vertical and steeper, no tillage is required.

D. Finished Grading

1. Preparation

Turf areas shall be filled as needed or have surplus soil removed to attain the finished grade. Drainage patterns shall be maintained as indicated on drawings. Turf areas compacted by construction operations shall be completely pulverized by tillage. Soil used for repair of erosion or grade deficiencies shall conform to topsoil-to-topsoil requirements specified below. New surfaces shall be blended to existing areas.

2. Topsoil

See specification section 02920 – Topsoil, 2.03 – SAND BASED ROOTZONE.

3. Bulk Density of Topsoil

Test the bulk density of the topsoil. Final bulk density of the topsoil should have a mean value of approximately 85 lbs. per cu. ft. taken from 5 samples from each field with no value exceeding 88 lbs. per cu. Ft. Verify with the sod provider that this bulk density is adequate to support the piece of equipment being used to install the rolled sod.

4. Lawn Area Debris

Lawn areas shall have debris and stones larger than one (1/2) inch in any dimension removed from the surface.

5. Field Area Debris

Field areas shall have debris and stones larger than one (1/2) inch in any dimension removed from the surface.

6. Protection

Finished graded areas shall be protected from damage by vehicular or pedestrian traffic and erosion.

3.03 SODDING

A. Sod shall be delivered to the job within 24 hours after being cut and shall be installed within 48 hours after being cut.

B. During wet weather, the sod shall be allowed to dry sufficiently to prevent tearing during handling and placing, and during dry weather it shall be watered before lifting to insure its vitality and to prevent the dropping off of the soil in handling.

C. Before the sod is placed, the sod bed will have been excavated to such a depth that when the sod is in place the top of the sod will be flush with the surrounding grade and in accordance with the typical cross section.

D. Immediately prior to the placing of the sod, the area shall be raked, or otherwise brought to an even surface forming a proper sod bed, and the soil shall be irrigated within 12 to 24 hours prior to laying of the sod.

E. The first row of sod shall be laid in a straight line, with subsequent rows placed parallel to, and tightly against, each other. Lateral joints shall be staggered to promote more uniform growth and strength. Care shall be exercised to insure that the turf is not stretched or overlapped, and that all joints are butted tight in order to prevent voids, which would cause air-drying of the roots.

F. After laying, the sod shall be watered thoroughly to a depth sufficient that the underside of the new sod pad and soil immediately below the turf grass sod (usually 1 inch of water is needed) and then tamped with approved sod tampers sufficiently to bring the sod into close contact with the sod-bed and ensure tight joints between the sections or strips. Upon the completion of the above work, the surface of the sodded areas shall coincide with the finished grade.

3.04 MOWING

A. When the grass reaches a height of 2 ½”, mow with reel-type mower to a height of 2-inches (1.5-inches minimum) and remove clippings.

B. The frequency of mowing will depend upon the rate of growth of the grass.

C. The mowing frequency should be spaced so that no more than 1/3 of the leaf area is removed at any one mowing.

D. Change the direction of mowing each time to help reduce soil compaction from the tractor wheels running in the same place each time, and the corrugation (washboard effect) when operated repeatedly and at high speeds on saturated soils.

3.05 RESTORATION AND CLEAN UP

A. Restoration

Existing turf areas, pavements and facilities that have been damaged from the turfing operation shall be restored to original condition at Contractor's expense.

B. Clean Up

Upon completion of work, remove debris and leave area in a clean, acceptable condition. Excess and waste material shall be removed from the planting operation and shall be disposed of off the site. Adjacent paved areas shall be cleaned.

3.06 PROTECTION OF TURFED AREAS

A. Immediately after turfing, the area shall be protected against traffic or other use by erecting barricades and providing signage as require, or as directed by the City of Newton and/or the Engineer.

3.07 TURF ESTABLISHMENT PERIOD

A. Commencement

The Turf Establishment Period for establishing a healthy stand of turf shall begin on the first day of work under this contract and shall end three (3) months after the last day of turfing operations required by this contract. Written calendar time period shall be furnished to the City of Newton and/or the Engineer for the Turf Establishment Period. When there is more than one turf establishment period, describe the boundaries of the turfed area covered for each period.

B. Satisfactory Stand of Turf

1. Sodded Area

a. At the end of the Establishment Period, a satisfactory stand of turf shall be a healthy, well-rooted, even-colored, viable turf, free of weeds, open joints, bare areas and surface irregularities.

b. Specified materials shall be used to reestablish turf that does not comply with the above requirements.

C. Maintenance During Establishment Period

1. General

Maintenance of the turfed areas shall include eradicating weeds, eradicating insects and diseases, protecting embankments and ditches from erosion, maintaining erosion control materials and mulch, protecting turfed areas from traffic, mowing, watering, and fertilization as defined below.

2. Mowing

Lawn Areas: Lawn areas shall be mowed to a minimum height of 1-1/2 inches when the average height of the turf becomes 2-1/2 inches. Clippings shall be removed when the amount of cut turf is heavy enough to damage the turfed areas.

3. Watering

Watering shall be at intervals to obtain a moist soil condition to a minimum depth of at least 4 inches. Frequency of watering and quantity of water shall be adjusted in accordance with the growth of the turf. Run-off, puddling and wilting shall be prevented.

4. Fertilization

Nitrogen carrier fertilizer shall be applied at the rate of 5 pounds per 1000 square feet after the first month and again prior to the final acceptance. The application shall be timed prior to the advent of winter dormancy and shall avoid excessively high nitrogen levels.

5. Repair

The Contractor shall re-establish as specified herein, eroded, damaged or barren areas. Mulch shall also be repaired or replaced as required.

6. Maintenance Report

A written record shall be furnished to the Owner's Representative of the maintenance work performed.

3.08 FINAL ACCEPTANCE

A. Preliminary Inspection

Prior to the completion of the Turf Establishment Period, a preliminary inspection shall be held by the Owner's Representative. Time for the inspection shall be established in writing. The acceptability of the turf in accordance with the Turf Establishment Period shall be determined. An unacceptable stand of turf shall be repaired as soon as turfing conditions permit.

B. Final Inspection

A final inspection shall be held by the Owner's Representative to determine that deficiencies noted in the preliminary inspection have been corrected. Time for the inspection shall be established in writing.

END OF SECTION

G:\713050\Specs\newton so hs_complete spec.doc

TURF SEEDING, FERTILIZING, AND MULCHING

SECTION 02985

PART 1 - GENERAL

1.01 GENERAL PROVISIONS

A. Attention is directed to the CONTRACT AND GENERAL CONDITIONS and all Sections within DIVISION 01 - GENERAL REQUIREMENTS which are hereby made a part of this Section of the Specifications.

1.02 DESCRIPTION

The work of this section consists of the following:

A. Seeding, fertilizing, irrigating, and mulching the following:

- Low maintenance, non-athletic field turfed and sloped areas.

1.03 REFERENCES

A. The publications listed below form a part of this specification to the extent referenced. The publications are referred to in the text by basic designation only.

AGRICULTURAL MARKETING SERVICE (AMS)

AMS-01 (Amended thru: August 1988) Federal Seed Act Regulations (Part 201-202)

AMERICAN SOCIETY FOR TESTING AND MATERIALS (ASTM)

ASTM D 977 (1991) Emulsified Asphalt

ASTM D 2028 (1976; R 1992) Cutback Asphalt (Rapid-Curing Type)

ASTM D 2607 (1969) Peats, Mosses, Humus, and Related Products

COMMERCIAL ITEM DESCRIPTIONS (CID)

CID A-A-1909 (Basic; Notice 1) Fertilizer

1.04 SUBMITTALS

A. The following shall be submitted in accordance with Section 01300 -SUBMITTALS.

1. Manufacturer's Literature

Manufacturer's literature discussing physical characteristics, application and installation instructions for erosion control material, and for chemical treatment material.

2. Equipment List

A list of proposed seeding and mulching equipment to be used in performance of turfing operation, including descriptive data and calibration test.

3. Certificates

Certificates of compliance certifying that materials meet the requirements specified, prior to the delivery of materials. Certified copies of the reports for the following materials shall be included:

a. Seed

For each mixture, percent pure live seed, minimum percent germination and hard seed, maximum percent weed seed content, date tested and state certification. For species mixture percentage, percent purity, field location.

For cultivar genetic purity, field location.

b. Fertilizer

For chemical analysis, composition percent.

c. Agricultural Limestone

For calcium carbonate equivalent and sieve analysis.

d. Peat

For compliance with ASTM D 2607.

e. Asphalt Adhesive

For compliance with ASTM D 977 and ASTM D 2028.

f. Topsoil

For pH, particle size, chemical analysis and mechanical analysis.

1.05 DELIVERY, INSPECTION, STORAGE, AND HANDLING

A. Delivery

1. Topsoil

Refer to specification section 02920 – Topsoil.

2. Soil Amendments

Soil amendments shall be delivered to the site in the original, unopened containers bearing the manufacturer's chemical analysis. In lieu of containers, soil amendments may be furnished in bulk. A chemical analysis shall be provided for bulk deliveries.

B. Inspection

Seed, fertilizer, and mulch shall be inspected upon arrival at the job site by the Owner's representative for conformity to type and quality in accordance with paragraph MATERIALS. Other materials shall be inspected for meeting specified requirements and unacceptable materials shall be removed from the job site. Turf areas found to be deficient shall be replanted with same material as originally specified.

C. Storage

Materials shall be stored in areas designated by the Contracting Officer. Seed, lime and fertilizer shall be stored in cool, dry locations way from contaminants. Chemical treatment materials shall not be stored with other landscape materials.

D. Handling

1. Materials

Except for bulk deliveries, materials shall not be dropped or dumped from vehicles. Deliveries shall be received in original, unopened containers with any pertinent information attached.

PART 2 - PRODUCTS

2.01 MATERIALS

A. Seed

1. Seed Classification

State-certified seed of the latest season's crop shall be provided in original sealed packages bearing the producer's guaranteed analysis for percentages of mixture, purity, germination, hard seed, weed seed content, and inert material. Labels shall be in conformance with AMS-01 and applicable state seed laws.

2. Seed Mixtures

Seed mixture: Standard grade seed of the most recent season's crop. Seed shall be dry and free of mold. Seed shall be inoculated with endophtyes. Seed mixture shall be as follows:

Seed Mix No. 1, Open Space Mix:

In low maintenance, non-athletic Field turfed areas shall be Proscape Superior Sun And Shade Mix (or Approved Equal):

Name of Seed	% by weight in Mixture	Minimum % Purity	Minimum % Germination
Secretariat Perennial Ryegrass	35	95	85
Exacta Perennial Ryegrass	30	95	85
Pathfinder Creeping Red Fescue	25	95	85
Champagne Kentucky Bluegrass	10	95	85

This seed mix will give a wide range of adaptation on areas to be mowed at one and a half to two inches. The quick germinating ryegrass will act as a nurse grass while the Kentucky bluegrasses will dominate sunny areas and offer great resistance to traffic. the creeping red fescues do well in shade and under conditions of moderate moisture stress.

Seed Mix No. 2, Slope Mix:

Steep slopes, as shown on the plans, shall be New England Erosion Control/Restoration Mix for Dry Sites, as manufactured by New England Wetland Plants Inc., Amherst MA, or Equal.

This seed mix will provide an appropriate selection of native and non-native grasses to ensure that dry, recently disturbed areas will be quickly re-vegetated and the soil surface stabilized.

3. Quality

Weed seed shall not exceed one (1) percent by weight of the total mixture. Wet, moldy, or otherwise damaged seed shall be rejected.

4. Seed Mixing

The field mixing of seed shall be performed on-site in the presence of the Owner's Representative.

B. Soil Amendments

Soil amendments shall consist of lime, fertilizer, organic soil amendments and soil conditioners meeting the following requirements and shall be applied in accordance with the topsoil testing analysis.

1. Lime

Lime shall be agricultural limestone and shall have a minimum calcium carbonate equivalent of 90 percent and shall be ground to such a fineness that at least 90 percent will pass a 10-mesh sieve and at least 50 percent will pass a 60-mesh sieve.

2. Fertilizer

Fertilizer shall be commercial grade, free flowing, uniform in composition and conforming to CID A-A-1909. Granular Fertilizer: As recommended by the soil test. Fertilizer shall contain a minimum of 35% water insoluble Nitrogen or "slow release" Nitrogen and shall be manufactured specifically for use on lawn and turf areas.

3. Organic Soil Amendments

a. Topsoil: Off-site topsoil, if required, shall conform to topsoil requirements specified in Section 02920, and shall be amended as recommended by soil test.

b. Peat: Peat moss derived from a bog, swampland or marsh shall conform to ASTM D 2607.

c. Sand: Clean, free of toxic materials; 95 percent by weight shall pass a No. 10 sieve and 10 or less percent by weight shall pass a No. 16 sieve.

d. Rotted Manure: Well rotted, horse or cattle manure containing a maximum 25 percent by volume of straw, sawdust, or other bedding materials, free of stones, sticks, soil and containing no chemicals or ingredients harmful to plants.

C. Soil Conditioner

Soil conditioner shall be for single use or in combination to meet requirements for topsoil. Gypsum shall be commercially packaged, free flowing, minimum 95 percent calcium sulfate by volume.

1. Mulch

Mulch shall be free from weeds, mold, and other deleterious materials.

2. Straw

Straw shall be stalks from oats, wheat, rye, barley or rice furnished in air-dry condition and with a consistency for placing with commercial mulch-blowing equipment.

3. Hay

Hay shall be native hay, sudan-grass hay, broomsege hay, or other herbaceous mowing furnished in an air-dry condition suitable for placing with commercial mulch-plowing equipment.

4. Wood Cellulose Fiber

Wood cellulose fiber shall not contain any growth or germination-inhibiting factors and shall be dyed an appropriate color to facilitate visual metering during application. Composition on air-dry weight basis: 9 to 15 percent moisture, pH range from 4.5 to 6.0.

5. Paper Fiber Mulch

Paper fiber mulch shall be recycled newsprint that is shredded for the purpose of mulching seed.

E. Asphalt Adhesive

Asphalt adhesive shall conform to the following:

1. Emulsified Asphalt

Conforming to ATM D 977, Grade SS-1.

2. Cutback Asphalt

Conforming to ASTM D 2028, designation RC-70.

F. Water

Water shall not contain elements toxic to plant life.

PART 3 - EXECUTION

3.01 SEEDING TIMES AND CONDITIONS

A. Seeding Time

Seed shall be sown from 4/15 to 6/15 for spring planting and 8/15 to 10/15.

B. Turfing Conditions

Turf operations shall be performed only during periods when beneficial results can be obtained. When drought, excessive moisture or other unsatisfactory conditions prevail, the work shall be stopped when directed. When special conditions warrant, a variance to the turf operations, proposed times shall be submitted to and approved by the Owner's Representative.

3.02 SITE PREPARATION

A. Grading

The Contractor shall verify that finished grades are as indicated on drawings, and the placing of topsoil and the smooth grading has been completed in accordance with Section 02920.

B. Application of Soil Amendments

1. Soil Test

Soil testing for all imported topsoil shall be performed in accordance with specification section 02920 – Topsoil.

2. Lime

Lime shall be applied at the rate recommended by the soil test. Lime shall be incorporated into the soil to a minimum depth of four (4) inches or may be incorporated as part of the tillage operation.

3. Fertilizer

Fertilizer shall be applied at the rate recommended by the soil test. Fertilizer shall be incorporated into the soil to a minimum depth of four (4) inches and may be incorporated as part of the tillage operation.

C. Tillage

1. Minimum Depth

Soil on slopes gentler than 3 horizontal to 1 vertical shall be tilled to a minimum depth of 4 inches. On slopes between 3 horizontal to 1 vertical and 1 horizontal to 1 vertical, the soil shall be tilled to a minimum depth of two (2) inches by scarifying with heavy rakes, or other method. Rototillers shall be used where soil conditions and length of slope permit. On slopes 1 horizontal to 1 vertical and steeper, no tillage is required.

D. Finished Grading

1. Preparation

Turf areas shall be filled as needed or have surplus soil removed to attain the finished grade. Drainage patterns shall be maintained as indicated on drawings. Turf areas compacted by construction operations shall be completely pulverized by tillage. Soil used for repair of erosion or grade deficiencies shall conform to topsoil-to-topsoil requirements specified below. New surfaces shall be blended to existing areas.

2. Topsoil

Topsoil shall meet the requirements of Section 02920.

3. Lawn Area Debris

Lawn areas shall have debris and stones larger than one half (1/2) inch in any dimension removed from the surface.

4. Field Area Debris

Field areas shall have debris and stones larger than one half (1/2) inch in any dimension removed from the surface.

5. Protection

Finished graded areas shall be protected from damage by vehicular or pedestrian traffic and erosion.

3.03 SEEDING

A. General

Prior to seeding, any previously prepared seedbed areas compacted or damaged by interim rain, traffic or other cause, shall be reworked to restore the ground condition previously specified. Seeding operations shall not take place when the wind velocity will prevent uniform seed distribution.

B. Equipment Calibration

The equipment to be used and the methods of turfing shall be subject to the inspection and approval of the Owner's representative prior to commencement of turfing operations. Immediately prior to the commencement of turfing operations, the Contractor shall conduct turfing equipment calibration tests in the presence of the Owner's representative.

C. Applying Seed

1. Broadcast Seeding in non-athletic fields with Seed Mix No. 1:

Seed shall be uniformly broadcast at the rate of 5.0 lbs./1000 square feet using broadcast seeders. Half of seed shall be broadcast in one direction, and the remainder at right angles to the first direction. Seed shall be covered to an average depth of ¼ inch by disk harrow, steel mat drag, cultipacker, or other approved device.

2. Rolling

Immediately after seeding all areas, except for slopes 3 horizontal to 1 vertical and greater, the entire area shall be firmed with a roller not exceeding 90 pounds for each foot of roller width

D. Mulch

1. Straw or Hay Mulch

Straw or hay mulch shall be spread uniformly at the rate of two (2) tons per acre. Mulch shall be spread by hand, blower-type mulch spreader or other approved method. Mulching shall be started on the windward side of relatively flat areas or on the upper part of a steep slope and continued uniformly until the area is covered. The mulch shall not be bunched. All seeded areas shall be mulched on the same day as the seeding.

2. Asphalt Adhesive Tackifier

When asphalt adhesive is applied to the in-place mulch, spraying shall be at the rate of between 10 to 13 gallons per 1000 square feet.

3. Non-Asphaltic Tackifier

Hydrophilic colloid shall be applied at rate recommended by manufacturer. Apply with hydraulic equipment suitable form mixing and applying uniform mixture of tackifier.

4. Spreading Asphalt Adhesive Coated Mulch

Straw or hay mulch shall be spread simultaneously with asphalt adhesive at the rate of two (2) tons per acre by using power mulch equipment, which shall be equipped with suitable asphalt pump and nozzle. The adhesive-coated mulch shall be applied evenly over the surface. Sunlight shall not be completely excluded from penetration to the ground surface.

E. Water

Watering shall be started within thirty (30) minutes after completing the seeded area. Water shall be applied at a rate sufficient to ensure moist soil conditions to a minimum depth of four (4) to six (6) inches. Run-off and puddling shall be prevented.

3.04 MOWING

A. When the grass reaches a height of 2-½", mow with reel-type mower to a height of 2-inches (1.5-inches minimum) and remove clippings.

B. The frequency of mowing will depend upon the rate of growth of the grass.

C. The mowing frequency should be spaced so that no more than 1/3 of the leaf area is removed at any one mowing.

D. Change the direction of mowing each time to help reduce soil compaction from the tractor wheels running in the same place each time, and the corrugation (washboard effect) when operated repeatedly and at high speeds on saturated soils.

3.05 RESTORATION AND CLEAN UP

A. Restoration

Existing turf areas, pavements and facilities that have been damaged from the turfing operation shall be restored to original condition at Contractor's expense.

B. Clean Up

Upon completion of work, remove debris and leave area in a clean, acceptable condition. Excess and waste material shall be removed from the planting operation and shall be disposed of off the site. Adjacent paved areas shall be cleaned.

3.06 PROTECTION OF TURFED AREAS

A. Immediately after turfing, the area shall be protected against traffic or other use by erecting barricades and providing signage as required, or as directed by the City of Newton and/or the Engineer.

3.07 TURF ESTABLISHMENT PERIOD

A. Commencement

The Turf Establishment Period for establishing a healthy stand of turf shall begin on the first day of work under this contract and shall end three (3) months after the last day of turfing operations required by this contract. Written calendar time period shall be furnished to the Town of Needham and/or the Engineer for the Turf Establishment Period. When there is more than one turf establishment period, describe the boundaries of the turfed area covered for each period.

B. Satisfactory Stand of Turf

1. Seeded Area

a. A satisfactory stand of turf from the seeding operation for a lawn area is defined as a minimum of 15 grass plants per square foot. Bare spots shall be no larger than six (6) inches square. The total bare spots shall not exceed two (2) percent of the total seeded area.

C. Maintenance During Establishment Period

1. General

Maintenance of the turfed areas shall include eradicating weeds, eradicating insects and diseases, protecting embankments and ditches from erosion, maintaining erosion control materials and mulch, protecting turfed areas from traffic, mowing, watering, and fertilization as defined below.

2. Mowing

Lawn Areas: Lawn areas shall be mowed to a minimum height of 1-1/2 inches when the average height of the turf becomes 2-1/2 inches. Clippings shall be removed when the amount of cut turf is heavy enough to damage the turfed areas.

3. Watering

Watering shall be at intervals to obtain a moist soil condition to a minimum depth of 1 inch. Frequency of watering and quantity of water shall be adjusted in accordance with the growth of the turf. Run-off, puddling and wilting shall be prevented.

4. Fertilization

Nitrogen carrier fertilizer shall be applied at the rate of 5 pounds per 1000 square feet after the first month and again prior to the final acceptance. The application shall be timed prior to the advent of winter dormancy and shall avoid excessively high nitrogen levels.

5. Repair

The Contractor shall re-establish as specified herein, eroded, damaged or barren areas. Mulch shall also be repaired or replaced as required.

6. Maintenance Report

A written record shall be furnished to the Owner's Representative of the maintenance work performed.

3.08 FINAL ACCEPTANCE

A. Preliminary Inspection

Prior to the completion of the Turf Establishment Period, a preliminary inspection shall be held by the Owner's Representative. Time for the inspection shall be established in writing. The acceptability of the turf in accordance with the Turf Establishment Period shall be determined. An unacceptable stand of turf shall be repaired as soon as turfing conditions permit.

B. Final Inspection

A final inspection shall be held by the Owner's Representative to determine that deficiencies noted in the preliminary inspection have been corrected. Time for the inspection shall be established in writing.

END OF SECTION

G:\713050\Specs\newton so hs_complete spec.doc

CONCRETE FORMWORK

SECTION 03100

PART 1 - GENERAL

1.01 GENERAL PROVISIONS

A. Attention is directed to the CONTRACT AND GENERAL CONDITIONS and all Sections within DIVISION 1 - GENERAL REQUIREMENTS which are hereby made a part of this Section of the Specifications.

1.02 WORK INCLUDED

The Contractor shall supply all labor, materials, equipment, temporary protection, tools and appliances necessary for the proper completion of the work in this section, as required in the specifications and in accordance with good construction practice. The work under this section generally includes the following:

A. Furnish, erect, and remove after use all concrete formwork and accessories as required for cast-in-place concrete work.

1.03 RELATED WORK

A. Examine Contract Documents for requirements that affect work of this Section. Other Specification Sections that directly relate to work of this Section include, but are not limited to:

1. Section 02300 – Earthwork
2. Section 03200 – Concrete Reinforcement
3. Section 03300 – Cast-In-Place Concrete

1.04 REFERENCES

A. Comply with applicable requirements of the following standards. Where these standards conflict with other requirements, the most restrictive requirements shall govern.

ACI INTERNATIONAL (ACI)

ACI 301	Specification for Structural Concrete for Buildings
ACI 318/318R	Building Code requirements for Structural Concrete and Commentary
ACI 347R	Guide to Formwork for Concrete

AMERICAN HARDBOARD ASSOCIATION (AHA)

AHA A135.4	(1995) Basic Hardboard

DEPARTMENT OF COMMERCE (DOC)

DOC PS 1	Construction and Industrial Plywood

MASSACHUSETTS STATE BUILDING CODE

780 CMR	Massachusetts State Building Code, 7th Edition

1.05 SUBMITTALS

The following shall be submitted in accordance with Section 01300 SUBMITTAL PROCEDURES:

A. Data: Design analysis and calculations for form design and methodology used in the design.

Manufacturer's data including literature describing form materials, accessories, and form releasing agents.

B. Drawings: Drawings showing details of formwork including, joints, supports, studding and shoring, and sequence of form and shoring removal.

C. Instructions: Manufacturer's recommendation on method and rate of application of form releasing agents.

1.06 DESIGN

A. Formwork shall be designed in accordance with methodology of ACI 347R for anticipated loads, lateral pressures, and stresses.

B. Forms shall be capable of producing a surface which meets the requirements of the class of finish specified in Section 03300 CAST-IN-PLACE CONCRETE.

C. Forms shall be capable of withstanding the pressures resulting from placement and vibration of concrete.

1.07 QUALITY CONTROL

A. Unless otherwise specified herein, or indicated on the drawings, concrete formwork construction and materials shall conform to ACI 301, 318, and 347, and the following tolerances:

TABLE 1: TOLERANCES FOR FORMED SURFACES			
1.	Variations from the plumb.	In any 10 feet of length.	¼ inch
a.	In the lines and surfaces of piers, walls.	Maximum for entire length and in arises.	1 inch
2.	Variation from the level or from the grades indicated on the drawings.	In any 10 feet of length. In any bay or in any 20 feet of length.	¼ inch $^{3}/_{8}$ inch
3.	Variation in the thickness of slabs and walls.	Minus. Plus.	¼ inch ½ inch
4.	Footings.		
a.	Variation of dimensions in plan. When formed: When placed against unformed excavation:	 Minus. Plus. Plus.	 ½ inch 2 inches 3 inches
b.	Misplacement of the eccentricity.	2 percent of the footing width in direction of misplacement. But not more than	 2 inches
c.	Reduction in thickness.	Minus.	5 percent of specified thickness

B. Maximum deflection of form facing materials at concrete surfaces exposed to view shall be L/240 of span.

PART 2 - PRODUCTS

2.01 FORM MATERIALS

A. Forms for Class A and Class B finished surfaces shall be plywood panels conforming to DOC PS 1, Grade B-B concrete form panels, Class I or II. Other form materials or liners may be used provided the smoothness and appearance of concrete produced will be equivalent to that produced by the plywood concrete form panels.

B. Forms for Class C finished surfaces shall be shiplap lumber; plywood conforming to DOC PS 1, Grade B-B concrete form panels, Class I or II; tempered concrete form hardboard conforming to AHA A135.4; other approved concrete form material; or steel, except that steel lining on wood sheathing shall not be used.

C. Forms for Class D finished surfaces, except where concrete is placed against earth, shall be wood or steel or other approved concrete form material.

D. Form ties shall be factory-fabricated metal ties, shall be of the removable or internal disconnecting or snap-off type, and shall be of a design that will not permit form deflection and will not spall concrete upon removal. Solid backing shall be provided for each tie. Except where removable tie rods are used, ties shall not leave holes in the concrete surface less than ¼ inch nor more than 1 inch deep and not more than 1 inch in diameter. Removable tie rods shall not be more than 1-½ inches in diameter.

E. Form releasing agents shall be commercial formulations that will not bond with, stain or adversely affect concrete surfaces. Agents shall not impair subsequent treatment of concrete surfaces depending upon bond or adhesion nor impede the wetting of surfaces to be cured with water or curing compounds.

PART 3 - EXECUTION

3.01 INSTALLATION

A. Forms shall be mortar tight, properly aligned, and adequately supported to produce concrete surfaces meeting the surface requirements specified in Section 03300 CAST-IN-PLACE CONCRETE. Forms shall conform to construction tolerances given in TABLE 1 of this Section.

B. Where concrete surfaces are to have a Class A or Class B finish, joints in form panels shall be arranged as approved. Where forms for continuous surfaces are placed in successive units, care shall be taken to fit the forms over the completed surface so as to obtain accurate alignment of the surface and to prevent leakage of mortar.

C. Forms shall not be reused if there is any evidence of surface wear and tear or defects which would impair the quality of the surface. Surfaces of forms to be reused shall be cleaned of mortar from previous concreting and of all other foreign material before reuse.

D. Form ties that are to be completely withdrawn shall be coated with a nonstaining bond breaker.

3.02 CHAMFERING

A. Except as otherwise shown, external corners that will be exposed shall be chamfered, beveled, or rounded by moldings placed in the forms.

3.03 COATING

A. Forms for Class A and Class B finished surfaces shall be coated with a form releasing agent before the form or reinforcement is placed in final position. The coating shall be used as recommended in the manufacturer's printed or written instructions.

B. Forms for Class C and D finished surfaces may be wet with water in lieu of coating immediately before placing concrete, except that in cold weather with probable freezing temperatures, coating shall be mandatory.

C. Surplus coating on form surfaces and coating on reinforcing steel and construction joints shall be removed before placing concrete.

3.04 REMOVAL OF FORMS

A. Forms shall be removed in a manner that will prevent damage to the concrete and will ensure the complete safety of the structure. Formwork for footings, walls, and other parts not supporting the weight of concrete may be

removed when the concrete has attained sufficient strength to resist damage from the removal operation, but not before at least 24 hours has elapsed since concrete placement.

B. Supporting forms and shores shall not be removed from walls until the structural units are strong enough to carry their own weight and any other construction or natural loads.

C. In no case will supporting forms or shores be removed before the concrete strength has reached 70 percent of design strengths as determined by field cured cylinders or other approved methods. This strength shall be demonstrated by job-cured test specimens, and by a structural analysis considering the proposed loads in relation to these test strengths and the strength of forming and shoring system.

D. The job-cured test specimens for form removal purposes shall be provided in numbers as directed and shall be in addition to those required for concrete quality control. The specimens shall be removed from molds at the age of 24 hours and shall receive, insofar as possible, the same curing and protection as the structures they represent.

END OF SECTION

G:\713050\Specs\newton so hs_complete spec.doc

CONCRETE REINFORCEMENT

SECTION 03200

PART 1 - GENERAL

1.01 GENERAL PROVISIONS

A. Attention is directed to the CONTRACT AND GENERAL CONDITIONS and all Sections within DIVISION 1, GENERAL REQUIREMENTS which are hereby made a part of this Section of the Specifications.

1.02 WORK INCLUDED

In general, the Contractor shall supply all labor, materials, equipment, temporary protection, tools and appliances necessary for the proper completion of the work in this section, as required in the specifications and in accordance with good construction practice. The work under this section generally includes the following:

A. Furnish and install reinforcing bars, tie wires and supports as required.

B. Furnish and install welded wire fabric as required.

C. Clean all areas affected by the work.

1.03 RELATED WORK

A. Examine Contract Documents for requirements that affect work of this Section. Other Specification Sections that directly relate to work of this Section include, but are not limited to:

1. Section 03100 – Concrete Formwork
2. Section 03300 – Cast-in-Place Concrete

1.04 REFERENCES

A. Comply with applicable requirements of the following standards. Where these standards conflict with other requirements, the most restrictive requirements shall govern.

American Concrete Institute Standards (ACI) latest edition.

301 Specifications for Structural Concrete

318 Building Code Requirements for Structural Concrete.

315 Details and Detailing of Concrete Reinforcement.

315R Manual of Engineering and Placing Drawings for Reinforced Concrete Structures

American Society for Testing and Materials (ASTM)

A615 Deformed and Plain Billet Steel Bars for Concrete Reinforcement

Concrete Reinforcing Steel Institute (CRSI)

Manual of Standard Practice, Latest Edition

Placing Reinforcing Bars, Latest Edition.

1.05 SUBMITTALS

The following shall be submitted in accordance with Section 01300, SUBMITTAL PROCEDURES:

A. Shop Drawings:

Show sizes and dimensions for fabrication and placing of reinforcing steel and bar supports. Indicate bar schedules, stirrup spacing, and diagrams of bent bars.

B. Certificates:

Mill test certificates identifying chemical and physical analysis of each load of reinforcing steel delivered.

1.06 DELIVERY, STORAGE, AND HANDLING

A. Deliver reinforcement to project site in bundles marked with metal tags indicating bar size and length.

B. Handle and store materials to prevent contamination and contact with the ground.

1.08 QUALITY CONTROL

A. Reinforcing steel shall be fabricated to conform to the required shapes, dimensions and tolerances specified in the CRSI Manual.

B. Allowable Tolerances:

1. Fabrication Tolerances:

a. Sheared Length: plus or minus 1 inch for bends. Stirrups, ties, and spirals: plus or minus ½ inch.

2. Placement Tolerances:

a. Concrete cover to form surface: plus or minus ¼ inch.

b. Minimum spacing between bars: minus ¼ inch.

c. Top bars in slabs and beams: Members 8 inches deep or less: plus or minus ¼ inch; members between 8 inches and 2 feet: plus or minus 1 inch; members 2 feet deep or greater: plus or minus 1 inch.

d. Crosswise of members: spaced evenly within 2 inches.

e. Lengthwise of members: plus or minus 1 inch.

f. Maximum bar movement to avoid interference with other reinforcing steel, conduits, or embedded items: 1 bar diameter.

PART 2 - MATERIALS

2.01 MATERIALS

A. Reinforcing Bars:

1. Deformed billet steel: ASTM A615, Grade 60.

2. Bend test: Meet 90° bend test at 60° F minimum temperature around a 10 bar diameter bend without cracking.

B. Welded Wire Fabric:

1. Size per plans, conform to ASTM A884, Epoxy Coated.

2. All welded wire fabric to be provided in flat sheets.

C. Tie Wire:

1. Annealed Steel - Federal Specification QQ-W-461, 16 gage minimum.

D. Bar Supports:

1. Conform to "Bar Support Specifications", CRSI Manual of Standard Practice, Class B - Pregalvanized cold-drawn wire.

2.02 FABRICATION

In accordance with CRSI Manual of Standard Practice.

PART 3 - EXECUTION

3.01 PREPARATION

Remove all mud, oil, loose rust or mill scale and other foreign materials that may reduce bond prior to placing concrete. "Tight" rust or mill scale will be permissible without cleaning or brushing, provided weights and dimensions are not less than the minimum required by referenced specifications.

3.02 INSTALLATION

A. Reinforcing Bar Placement:

1. Conform to CRSI-WCRSI "Placing Reinforcing Steel".

2. Position bars in accordance with above tolerances and secure in place.

B. Welded Wire Fabric Placement:

1. Install in lengths as long as practicable. Lap adjoining pieces at least one full mesh and lace splices with wire. Offset laps of adjoining widths to prevent continuous laps in either direction.

2. Fabric shall be wired or clipped together at laps at intervals not to exceed 4 feet. Fabric shall be positioned by the use of appropriate supports suitable for application.

C. Bar Supports:

1. Provide minimum number of supports as required by ACI 315.

2. Do not use pebbles, pieces of broken stone, brick, or concrete, metal pipe or wood blocks to support reinforcement. Do not use bar supports as support for runways for concrete buggies or similar loads. Do not place bars more than 2 inches beyond the last leg at the end of a run of continuous supports.

D. Concrete Cover:

1. Except as otherwise indicated on the construction drawings, provide the minimum clearance for concrete cover in accordance with ACI 318.

E. Reinforcing Adjustment:

1. Move only within allowable tolerances to avoid interference with other reinforcing steel, conduits, or embedded items. Do not move bars beyond allowable tolerance without approval of the Engineer.

2. Do not heat, bend, or cut bars without approval of the Engineer.

F. Splices:

1. Do not splice bars except at locations on the details without approval of the Engineer.

2. Minimum lap distance is as shown on the details and as specified in ACI 318. Tie splices securely with wire to prevent displacement during placing of concrete.

END OF SECTION

G:\713050\Specs\newton so hs_complete spec.doc

CAST-IN-PLACE CONCRETE

SECTION 03300

PART 1 - GENERAL

1.01 GENERAL PROVISIONS

A. Attention is directed to the CONTRACT AND GENERAL CONDITIONS and all Sections within DIVISION 01 - GENERAL REQUIREMENTS which are hereby made a part of this Section of the Specifications.

1.02 WORK INCLUDED

In general, the Contractor shall supply all labor, equipment, temporary protection, tools and appliances necessary for the proper completion of the work as required in the specifications and in accordance with good construction practice. Refer to the Contract Drawings for locations of work included in the contract. The work under this section generally includes the following:

1. Concrete slabs and footings
2. Concrete curbing

1.03 RELATED WORK SPECIFIED ELSEWHERE

Items of work in the following sections are related to work performed under this section:

1. Section 02300 - Earthwork
2. Section 03100 – Concrete Formwork
3. Section 03200 – Concrete Reinforcement

1.04 REFERENCES

A. Comply with applicable requirements of the following standards. Where these standards conflict with other requirements, the most restrictive requirements shall govern.

American Concrete Institute (ACI), latest edition

212 Guide for Use of Admixtures in Concrete

301 Specification for Structural Concrete

305 Hot Weather Concreting

306 Cold Weather Concreting

318 Building Code Requirements for Structural Concrete

American Society for Testing and Materials (ASTM)

A307 Carbon Steel Externally Threaded Standard Fasteners

A563 Carbon and Alloy Steel Nuts

C33 Concrete Aggregates

C94 Ready-Mixed Concrete

C143 Slump of Portland Cement Concrete

C150 Portland Cement

C171 Sheet Materials for Curing Concrete

C231 Air Content of Freshly Mixed Concrete by the Pressure Method

C260 Air-Entraining Admixtures for Concrete

C309 Liquid Membrane-Forming Compounds for Curing Concrete

C494 Chemical Admixtures for Concrete

C618 Fly Ash and Raw or Calcinized Natural Pozzolan for use as a Mineral Admixture in Portland Cement Concrete

F436 Hardened Steel Washers

U. S. Army Corps of Engineers (COE)

CRD-C 621 Specification for Nonshrink Grout: Hardened State (588) Volume Change

1.05 SUBMITTALS

A. In addition to Product Data, submit design mixes for each concrete mix.

1.06 JOB CONDITIONS

A. The Contractor shall be responsible for securing and protecting his/her equipment, materials and tools (as well as partially completed construction) from wind blow-off and vandalism or abuse.

B. Environmental Requirements:

Do not place concrete during rain, sleet or snow unless adequate protection is provided and the Engineer's approval is obtained. Do not allow rainwater to increase the mixing water or damage the surface finish.

C. Cold Weather Concreting:

Conform to ACI 306, "Recommended Practice For Cold Weather Concreting."

1. Temperature of concrete when placed shall not be less than the following:

Minimum Concrete Temperature ^{o}F

	Sections with Least Dimension	
Air Temp (^{o}F)	Under 12"	12" and Over
30 to 45	60	50
0 to 30	65	55
Below 0	70	60

2. When placed, heated concrete shall not be warmer than 80°F.

3. Prior to placing concrete, all ice, snow, and surface and subsurface frost shall be removed, and the temperature of the surfaces to be in contact with the new concrete shall be raised to the temperature specified above for placing.

4. Protect the concrete from freezing for four (4) days after placement.

5. Heated enclosures shall be strong and windproof to ensure adequate protection of corners, edges and thin sections. Do not permit heating units to locally heat or dry the concrete. Do not use combustion heaters during the first 24 hours unless the concrete is protected from exposure to exhaust gases which contain carbon dioxide.

6. When air temperature gets below 25 degrees F, two (2) additional ASTM C39 cylinders shall be made and located at the site in a location and under conditions which will match the placement that they represent. After seven (7) days of site conditions, the cylinders shall be placed in a steam room for twenty-one (21) days.

D. Hot Weather Concreting:

1. Conform to ACI 305, "Recommended Practice for Hot Weather Concreting." Take precautions when the ambient air temperature is 90° or above. Temperature of the concrete when placed shall not exceed 80° F. Cool forms and reinforcing to a maximum of 90° F by spraying with water prior to placing concrete. Do not use cement that has reached temperatures in excess of 170° F.

2. Prevent plastic shrinkage cracking due to rapid evaporation of moisture. Do not place concrete when the evaporation rate (actual or anticipated) equals or exceeds 0.20 pounds per square foot per hour, as determined by Figure 2.1.4 of ACI 305.

3. Set-retarding admixtures may be used with Engineer's approval when the ambient air temperature is 90° F or above to off-set the accelerating effects of high temperatures.

1.07 INSPECTION AND TESTING

A. The Contractor agrees to accept as final the results of tests, inspection and reports as may be made by the testing laboratory.

B. Inspection

1. During the progress of the work, the General Contractor shall provide free and safe access to the work at all times to the Engineer and the Owner's representative. He/she shall cooperate with the Engineer to obtain proper inspection of all work and shall furnish any required samples of concrete for testing.

C. Laboratory Inspection and Testing

1. During the progress of the work, a testing laboratory selected by the Engineer and paid for by the Owner shall conduct necessary field tests and make compensation for any variation in water content of the aggregate; and shall further direct that all batches shall be as nearly uniform as possible by the use of selected materials which are accurately measured, thoroughly mixed, and maintained at a constant water-cement ratio and consistency.

a. Provide the Owner and Engineer with necessary reports covering all of the above.

b. The payment for laboratory inspection and testing will be the responsibility of the Owner.

c. Coordination and scheduling of tests by the testing lab shall be the responsibility of the Owner.

d. Testing required because of changes requested by the Owner in materials, sources of materials, or mix proportions; and extra testing of concrete or materials because of failure to meet the Specification requirements are to be paid for by the Owner.

D. Tests of Fresh Concrete

1. There shall be at least one strength test for each 10 cubic yards of each class of concrete and at a minimum of not less than two tests for each class of concrete each day it is used. Slump shall be determined in accordance with ASTM Method of Test C143; air content shall be determined in accordance with ASTM Method of Test C138 or C231.

E. Tests of Hardened Concrete

1. When tests of fresh concrete are conducted, specimens shall be molded for compressive tests in conformance to ASTM Method C31. Not less than three specimens shall comprise a strength test. Compressive strength tests shall be made in accordance with ASTM Method of Test C39.

F. Age of Tests

1. The standard age of test shall be 28 days, but 7-day test may be used, provided the relation between the 7 and 28 days strengths of the concrete is established by tests for the materials and proportions used.

G. Strength Test Conformance of Molded Specimens

1. To conform to the requirements of these Specifications, the average strength of laboratory-cured specimens shall exceed the specified strength by 15% and not more than one strength test shall have an average value less than 90% of the specified strength.

H. Alternate Strength Tests

1. Where there is a question regarding the quality of the concrete in the structure because of strength-test failures, approval may be given by the Engineer to the Contractor to sponsor alternate strength tests made on specimens secured from the structure in accordance with ASTM Method of Test C 42, or actual load tests made in accordance with Building Code Requirements ACI 318. Basis of acceptance (or rejection) of the quality of the concrete by these alternate tests shall be agreed upon by the Engineer and the Contractor at the time of the approval of such tests is obtained.

I. Below Minimum Strengths

1. In all cases where the average strength of the cylinders shown by these tests for any portion of the structure falls below the minimum ultimate compressive strengths called for, the Engineer shall have the right to order a change in the mix or in the water content for the remaining portion of the structure and may require load tests at the expense of the Contractor to be made on the portion of the building so affected. Special curing methods may be required at no expense to the Owner for portions showing low strengths. Refer to Paragraph 3.06 C.

PART 2 - PRODUCTS

2.01 MATERIALS

A. Concrete Materials: As follows:

1. Portland Cement: ASTM C 150, Type I or II.
2. Aggregate: ASTM C 33, uniformly graded, from a single source.
3. Water: ASTM C 94.
4. Air-Entraining Admixture: ASTM C 260.
5. Water-Reducing Admixture: ASTM C 494, Type A.
6. High-Range, Water-Reducing Admixture: ASTM C 494, Type F.
7. Water-Reducing and Accelerating Admixture: ASTM C 494, Type E.
8. Water-Reducing and Retarding Admixture: ASTM C 494, Type D.

B. Related Materials: As follows:

1. Vapor Retarder: ASTM E 1745, Class C, not less than 7.8 mils polyethylene sheet.
2. Joint-Filler Strips: ASTM D 1751, asphalt-saturated cellulosic fiber, or ASTM D 1752, cork or self-expanding cork.
3. Bonding Agent: ASTM C 1059, Type II, non-redispersible, acrylic emulsion or styrene butadiene.

4. Epoxy-Bonding Adhesive: ASTM C 881, two-component epoxy resin, of class and grade to suit requirements.
5. Non-Shrink Grout: ASTM C 1107 with a minimum compressive strength of 6000 psi at 28 days.
   a. "Five Star Grout" by U. S. Grout Corp or approved equal.

C. Curing Materials: As follows:

1. Evaporation Retarder: Waterborne, monomolecular film forming, manufactured for application to fresh concrete.
2. Absorptive Cover: AASHTO M 182, Class 2, burlap cloth made from jute or kenaf, weighing approximately 9 oz./sq. yd. dry.
3. Moisture-Retaining Cover: ASTM C 171, polyethylene film or white burlap-polyethylene sheet.
4. Clear, Waterborne, Membrane-Forming Curing and Sealing Compound: ASTM C 1315, Type 1, Class A.
   a. 2 coats Sonneborn "Kure-N-Seal" or approved equal.

2.02 CONCRETE MIXES

A. Concrete Mixes, General; - Prepare design mixes, proportioned according to ACI 211.1 and ACI 301, with the following properties:

B. Slabs

1. Compressive Strength (28 Days): 4000 psi.
2. Slump: 1 to 3 inches.
3. Air Content: 5.0 to 8.0 percent

C. Footings

1. Compressive Strength (28 Days): 4000 psi
2. Slump: 1 to 3 inches
3. Air Content: 5.0 to 8.0 percent

D. Ready-Mixed Concrete: Measure, batch, mix, and deliver concrete according to ASTM C 94 and ASTM C 1116, and furnish batch ticket information.

PART 3 – EXECUTION

3.01 PREPARATION FOR PLACING

Before commencing concrete placement, the following shall be performed:

A. Surface Preparation:

1. Surfaces to receive concrete shall be clean and free from frost, ice, mud, and water.

2. Earth (subgrade, base, or subbase courses) surfaces upon which concrete is to be placed shall be clean, damp, and free from debris, frost, ice, and standing or running water. The foundation shall be well drained and shall be satisfactorily graded and uniformly compacted.

3. Concrete surfaces to which other concrete is to be bonded shall be abraded in an approved manner that will expose sound aggregate uniformly without damaging the concrete. Laitance and loose particles shall be removed. Surfaces shall be thoroughly washed and shall be moist but without free water when concrete is placed.

B. Equipment:

1. Transporting and conveying equipment shall be in-place, ready for use, clean, and free of hardened concrete and foreign material.

2. Equipment for consolidating concrete shall be at the placing site and in proper working order.

3. Equipment and material for curing and for protecting concrete from weather or mechanical damage shall be at the placing site, in proper working condition, and in sufficient amount for the entire placement.

4. When hot, windy conditions during concreting appear probable, equipment and material shall be at the placing site to provide windbreaks, shading, fogging, or other action to prevent plastic shrinkage, cracking, or other damaging drying of the concrete.

C. Before placement of concrete, care shall be taken to determine that all embedded items are firmly and securely fastened in place as indicated on the drawings, or required. Conduit and other embedded items shall be clean and free of oil and other foreign matter such as loose coatings or rust, paint, and scale. The embedding of wood in concrete will be permitted only when specifically authorized or directed. Voids in sleeves, inserts, and anchor slots shall be filled temporarily with readily removable materials to prevent the entry of concrete into voids. Welding shall not be performed on embedded metals within 2 feet of the surface of the concrete. Tack welding shall not be performed on or to embedded items.

3.02 FORMWORK

A. Refer to Specification Section 03100.

3.03 PLACING REINFORCEMENT

A. Steel Reinforcement: refer to Specification Section 03200.

3.04 JOINTS

A. Locate and install construction, expansion, isolation, and contraction joints as indicated.

3.05 CONCRETE PLACEMENT

A. Conveying:

1. Convey concrete from mixer to final position as rapidly as practical without segregation or loss of material.

2. Use only metal or metal lined chutes with maximum length of 20 feet, maximum slope 1 vertical to 2 horizontal and minimum slope 1 vertical to 3 horizontal.

3. Provide a hopper at the end of long belt conveyors and chutes not meeting the above requirements.

4. Conveying by pumping methods shall conform to ACI 304. Maximum loss of slump, 2 inches. Do not use pipe made of aluminum or aluminum alloy to convey concrete. Should pumping be required for this project, all costs for pumping shall be borne by the Contractor. No additional compensation will be considered for any pumping costs.

B. Depositing:

1. Deposit concrete in a continuous operation until the section is completed. Regulate rate of placement so concrete remains plastic and flows into position.

2. Maximum height of concrete free fall is 4 feet.

3. All concrete shall be placed within the time constraints of ASTM C94 and ACI 301, and as modified by ACI 305 for hot weather concreting. All concrete on site more than the allotted time shall be rejected and sent back to the plant.

C. Consolidation:

1. Use mechanical vibrating, rodding or spading for consolidation. Conform to ACI 309, "Recommended Practice For Consolidation of Concrete."

2. Do not use vibrators to transport concrete in forms.

3. Minimum vibrator speed 8000 rpm.

4. Vertically invert vibrators at points 18 inches apart to a depth sufficient to penetrate 6 inches into the preceding layer. Vibrate each location for a length of time to obtain adequate consolidation (generally 5 to 15 seconds).

D. Embedments:

1. Accurately position and securely fasten all anchor bolts, castings, steel shapes, conduit, sleeves, and other materials to be embedded in the concrete.

2. Embedments shall be clean when installed. Remove concrete spatter from all surfaces not in contact with concrete.

E. Wash-out:

The Contractor shall remove residue from concrete mixing wash-out from all landscape, walkways, curbs, driveways, and similar surfaces to the satisfaction of the Owner.

3.06 CURING

A. Normal Conditions

1. All concrete shall be prevented from drying for at least the first 7 days after placing. All slabs shall be cured by spraying on the specified curing compound as per the manufacturer's printed instructions. Curing compounds which discolor the concrete are not permitted.

B. Cold Weather Conditions

1. Whenever the temperature of the surrounding air is below 40 degrees F, all concrete shall be maintained at a temperature of not less than 50 degrees F for at least 72 hours and shall be protected from freezing for at least another 72 hours, or for as much time as is necessary to insure proper curing of the concrete. The housing, covering or other protection used in connection with the curing shall remain in place and intact for at least 24 hours after the artificial heating is discontinued. No dependence shall be placed on salt or other chemicals for the prevention of freezing. The approved practice for Winter Concreting are those outlined in ACI 306.

C. Alternates

1. Methods of curing other than those specified above shall be approved by the Engineer before being used.

3.07 FINISHING CONCRETE

A. Defective Concrete:

1. Any concrete which is not formed as shown on the plans or for any reason is out of alignment or level, or shows a defective surface shall be corrected or replaced as directed by the Engineer.

2. Repair all surface defects and tie holes immediately after form removal.

3. Remove honeycombed or otherwise defective concrete to sound concrete with square cut edges to avoid feathering.

B. Patching:

1. Immediately after removing the forms, all concrete surfaces shall be inspected and any poor joints, voids, stone pockets or other defective areas and all tie holes shall at once be patched before the concrete is thoroughly dry. The patching shall be done in such a manner that it shall form a homogeneous part, in

appearance, and action of the main concrete. Fins shall be removed and patched as required where concrete is exposed.

C. Exposed Concrete:

1. All exposed concrete finish shall be as produced through the use of new smooth plywood or metal forms.

D. Finishing Floors, Slabs, and Topping Slabs: Comply with recommendations in ACI 302.1R for screeding, restraightening, and finishing operations for concrete surfaces.

1. Trowel and Fine-Broom Finish: Apply a partial trowel finish, stopping after second troweling. Immediately after second troweling, and when concrete is still plastic, broom with fiber-bristle broom perpendicular to main traffic route, to exterior slabs, platforms, steps, ramps and elsewhere as indicated.

3.08 NON-SHRINK GROUT

A. All steel base/bearing plates shall be grouted with non-shrink grout. Grout shall be placed in a manner which provides full contact with base/bearing plate or leveling plate. Leveling plate shall be set to provide full contact with base plate.

B. Where the leveling plate and base/bearing plate do not meet with a clearance of less than 0.05 inch at any location, apply non-shrink grout over the entire surface. If required, use steel wedges to maintain elevation.

3.09 FIELD QUALITY CONTROL

A. Concrete Tests:

Conduct the following minimum tests in accordance with the requirements of ACI 301, Section 16.3.

1. Strength Test:

Mold and cure three cylinders from each sample. Test one at 7 days for information and two at 28 days for acceptance.

Collect the following minimum number of samples per class of concrete for each day's placing:

10 cubic yards or less - 1 sample
10 to 75 cubic yards - 2 samples

2. Slump Test:

Conduct test for each strength test sample and whenever consistency of concrete appears to vary.

3. Air Content:

Conduct test from one of first three batches mixed each day and for each strength test sample.

B. Acceptance of Concrete:

1. The strength level of concrete will be considered satisfactory so long as the average of all sets of three consecutive strength test results equals or exceeds the specified 28-day strength and no individual strength test result falls below the specified strength by more than 500 psi.

2. Upon failure of test cylinder results, the Owner may require the Contractor, at his/her expense, to obtain and test at least three 2-inch diameter core samples from the area in question. Conform to ASTM C42. Concrete will be considered adequate if the average of the three cores is at least 85% of, and if no single core is less than 75% of the specified 28-day strength.

3. Upon failure of core test results, the Owner may require the Contractor, at his/her expense, to perform load tests as specified in ACI 318, Chapter 20. Should load tests fail to prove the concrete has reached the

required strength, the Contractor shall remove and replace all defective concrete at no additional cost to the Owner. No contract extension will be considered for the time required to remove and replace defective concrete.

4. Fill all core holes as specified for repairing defective concrete.

END OF SECTION

G:\713050\Specs\newton so hs_complete spec.doc

TRACK AND FIELD EQUIPMENT

SECTION 11480

PART 1 - GENERAL

1.01 GENERAL PROVISIONS

A. Attention is directed to the CONTRACT AND GENERAL CONDITIONS and all Sections within DIVISION 01 - GENERAL REQUIREMENTS which are hereby made a part of this Section of the Specifications.

1.02 WORK INCLUDED

A. Provide all equipment and materials, and do all work necessary to furnish and install the track and field equipment, (fixed and non-fixed), as indicated on the Drawings and as specified herein.

B. All equipment and materials shall meet or exceed Massachusetts Interscholastic Athletic Association (MIAA) and American Sports Builders Association (ASBA) Rules and Regulations.

1.03 RELATED WORK

A. Examine Contract Documents for requirements that affect work of this Section. Other Specification Sections that directly relate to work of this Section include, but are not limited to:

1. Section 02300 – Earthwork
2. Section 02535 – Synthetic Track Surfacing
3. Section 03300 – Cast-in-Place Concrete

1.04 SUBMITTALS

A. Shop drawings of each equipment item to be installed shall be submitted for the Engineer's approval. Indicate methods for allowing each item to properly drain.

B. Catalog Cuts and manufacturer's data will be submitted on each item of non-fixed track and fixed field equipment to be provided in accordance with this specification. This data will indicate the MIAA certifications required for each item.

1.05 PRODUCT DELIVERY AND STORAGE

A. Materials when delivered to site shall be stacked and stored above the ground under protective coverings or indoors in such manner as to insure proper drainage, ventilation, and protection.

PART 2 - PRODUCTS

2.01 TRACK AND FIELD EQUIPMENT

A. Long/Triple Jump Sand Pit and Cover

Sand pit shall be Model JumpForm® SP6022 as manufactured by Sportsfield Specialties, 41155 State Highway 10, Delhi, NY 13573 or equal.

Sand pit cover shall be Model JumpForm® SP6900 as manufacture by Sportsfield Specialties, or equal. The sand pit cover shall be size accordingly to cover the entire sand area. Contractor shall submit shop drawings showing compliance with the pit dimension.

Sand for long jump and triple jump landing zones shall be fine aggregate (F1), as per Specification 02300.

B. Discus Cage and throw ring

Discus cage shall be Model No. 732220 as manufactured by Gill Athletics, 20808 Gemini Court, Champaign, IL 61822 or equal.

Throw ring shall be model no. 367 as manufactured by Gill Athletics or equal.

C. Shot put toe board and ring (two (2) total)

Shot put toe board shall be Model No. 363 as manufactured by Gill Athletics or equal.

Shot put throw ring shall be model no. 366 as manufactured by Gill Athletics or equal.

D. Pole Vault box and Cover

Vault box shall be Model no. 502 as manufactured by Gill Athletics or equal.

Vault box cover shall be Model no. 50202 as manufactured by Gill Athletics or equal.

2.02 TRACK AND FIELD EQUIPMENT – NON-FIXED

A. Protective Crossing Mat

1. Protective Crossing Mat shall be a 15' x 40' Turf Armor "Cross Over Tarp" Product No. 40CO-102 as manufactured by Professional Turf Products, LLC, 207 Orchard Avenue, Belle Vernon, PA 15012 or equal.

PART 3 - EXECUTION

3.01 TRACK AND FIELD EQUIPMENT - GENERAL

A. All equipment shall be constructed to properly drain. Install PVC drain pipe to create positive drainage in accordance with approved shop drawings.

3.02 TRACK AND FIELD EQUIPMENT

A. Establishment of subgrade shall be completed under Section 02300 - Earthwork

B. Installation

Install equipment at locations indicated on the Drawings in strict accordance with manufacturer's printed instructions.

C. Install track and field equipment at locations indicated on the Drawings in strict accordance with manufacturer's printed instructions.

3.03 CLEANING

A. Upon completion of work in any given area, remove all rubbish and debris from the work area and leave in clean condition.

END OF SECTION

G:\713050\Specs\newton so hs_complete spec.doc

ATHLETIC FIELD EQUIPMENT

SECTION 11490

PART 1 - GENERAL

1.01 GENERAL PROVISIONS

A. Attention is directed to the CONTRACT AND GENERAL CONDITIONS and all Sections within DIVISION 01 - GENERAL REQUIREMENTS which are hereby made a part of this Section of the Specifications.

1.02 WORK INCLUDED

A. Provide all equipment and materials, and do all work necessary to furnish and install the athletic field equipment, (fixed and non-fixed), as indicated on the Drawings and as specified herein.

B. All equipment and materials shall meet or exceed Massachusetts Interscholastic Athletic Association (MIAA) Rules and Regulations.

C. Equipment:

Athletic field equipment shall include but not be limited to football goal posts, baseball and softball bases, batting tunnel, storage shed, protective netting, ticket booth, etc.

1.03 RELATED WORK

A. Examine Contract Documents for requirements that affect work of this Section.

1.04 SUBMITTALS

A. Shop drawings of each equipment item to be installed shall be submitted for the Engineer's approval. Indicate methods for allowing each item to properly drain.

B. Catalog Cuts and manufacturer's data will be submitted on each item of non-fixed track and fixed field equipment to be provided in accordance with this specification. This data will indicate the MIAA certifications required for each item.

1.05 PRODUCT DELIVERY AND STORAGE

A. Materials when delivered to site shall be stacked and stored above the ground under protective coverings or indoors in such manner as to insure proper drainage, ventilation, and protection.

B. Non-fixed equipment will be delivered to the site and stored local to the project site as directed by the City of Newton and/or the Engineer.

PART 2 - PRODUCTS

2.01 GOAL POSTS

A. Football Goal Posts shall be Model No. GP4300 as manufactured by Sportsfield Specialties, Inc., 41155 State Highway 10, Delhi, NY 13753, or equal. (2 PR, one for multipurpose field the other for football field inside the track)

2.02 HOMEPLATE AND BASES

A. Homeplate(s) shall be Model No. SHP-PS/Pro Home Plate, with ground anchor, as manufactured by Schutt Sports, 87 Elm Street, 3rd Floor, Hopkinton, MA 01748. (508) 435-7300 or equal. (Five (5) total, one for softball, one for baseball, two for the bullpens and one for batting tunnel.)

B. Bases shall be Hollywood Impact® Bases Model No. HIBL/set of 3 bases with BBP-44 ground anchor mounts and BBP – 1 Anchor plug w/indicator as manufactured by Schutt Sports, 87 Elm Street, 3rd Floor, Hopkinton, MA 01748. (508) 435-7300 or equal. (Two sets (2) one for softball and one for baseball)

C. Pitcher's rubber shall be Model No. SPR – 4SO/Official size as manufactured by Schutt Sports, 87 Elm Street, 3rd Floor, Hopkinton, MA 01748. (508) 435-7300 or equal. (Four (4) total, one for softball, one for baseball and two for bullpen areas.)

2.03 PROTECTIVE NETTING AT SYNTHETIC TURF - FIELD A

A. The netting shall be manufactured by Beacon Ballfields or equal and shall be mounted on black vinyl coated aluminum poles 20-ft high with a tension assembly. The netting shall be #504 black knotless, UV-treated nylon with 180-lb. minimum break strength and 1 7/8" square mesh. The netting shall have vinyl hems with grommet spaced every foot on all sides.

The Contractor shall submit shop drawing for approval on netting system and poles for both sites.

2.04 PLAYER'S BENCHES

A. Player's benches for Baseball, 90-ft diamond dugouts, shall be aluminum benches w/back rest (21 ft. each (two (2) total)) as manufactured by Sportsfield Specialties, Inc., 41155 State Highway 10, Delhi, NY 13753 or equal.

B. Player's benches for Softball, 60-ft diamond dugouts, shall be aluminum benches w/back rest (15 ft. each (two (2) total)) as manufactured by Sportsfield Specialties, Inc., 41155 State Highway 10, Delhi, NY 13753 or equal.

2.05 FOUL POLES

A. Foul poles shall be Standard Foul Poles (20' height) as manufactured by Beacon Athletics, 2224 Pleasant View RD #6, Middleton, WI 53562. (800) 747-5985 or equal.

2.06 SCOREBOARD

A. Multipurpose Field: Scoreboard shall be Daktronics Multisport scoreboard, model No. SO-2019 or equal. Existing scoreboard shall be removed and stored or disposed of as directed by the City of Newton and/or the Engineer.

B. Baseball Field: Baseball Scoreboard shall be Model BA 618, or equal with All Sport Controller model 1600R-5 as manufactured by Daktronics. Existing scoreboard shall be relocated to locations shown on the layout plan.

C. Track and Football Field: Daktronics Multisport scoreboard model No. FB-2027 or equal with football, track, soccer and lacrosse/field hockey optional panels. Existing scoreboard shall be removed and stored or disposed of as directed by the City of Newton and/or the Engineer.

2.07 BASEBALL DUGOUTS

A. Dugouts shall be World Series Dugouts, (two (2)) Product ID 120-405-039 (Wide) (29'7"x9'10") as manufactured by Beacon Ballfields, 2224 Evergreen Rd. #6, Middleton, WI, 53562 608-824-0068 or equal.

2.08 BATTING TUNNEL

A. Batting tunnel shall be "Long Gone" batting tunnel with heavy duty rolled aluminum tube and black #36 nylon mesh net, block pulley system, ground sleeves and net extension arms as manufactured by Sportsfield Specialties or equal.

2.09 STORAGE SHED

A. Storage shed shall be Model No. VT1217, as manufactured by Arrow Group Industries, Inc. 1101 North 4th Street, Breese, IL 62230. Contractor shall provide concrete pad in accordance with manufacturer's strict recommendations. Shed shall be painted green.

2.10 TICKET BOOTH

A. Ticket Booth shall be 6 x 8, two-person ticket booth as manufactured by Twin Modular Services, Inc., 10 Industrial Hwy, Lester, PA 19173. The ticket booth shall have the following requirements:

1. **FRAME:**
   a. MAIN BEAMS: 6" STEEL "I" BEAM TYPE
   b. TYPE: PERIMETER
   c. XMEMBER: STEEL - 24" O.C.
   d. AXLES: STEEL FORK SLOTS
2. **FLOOR:**
   a. BTM BOARD: NONE
   b. JOISTS: NONE – SEE XMEMBERS
   c. INSULATION: NONE
   d. DECKING: 3/4" PLYWOOD FASTENED TO STEEL MEMBERS
   e. FLOOR CVR: VINYL TILE – 12"X12"X1/8" -
   f. TRIM: 4" COVE BASE
3. **EXTERIOR WALLS:**
   a. STUDS: 2X4 FRAMING @16" O.C.
   b. PLATES: SINGLE 2"X4" TOP AND SINGLE BOTTOM
   c. SHEATHING: 7/16" OSB SHEATHING FASTENED TO STUDS
   d. WALL CVR: 1/8" VINYL COVERED PANELING – GREEN
   e. INSULATION: 3 ½" R-13 F/G KRAFT FACED BATT
   f. PARTITIONS: NONE
   g. BASE TRIM: 4" COVE BASE
   h. SIDING: .019 VERTICAL ALUMINUM
   i. TRIM: .019 ALUMINUM
4. **ROOF:**
   a. TYPE: WOOD RAFTERS 2X6 @ 16" O.C. – FLAT TYPE – 12" OVERHANG-TICKET WINDOW SIDE ONLY
   b. SHEATHING: ½" CDX PLYWOOD
   c. INSULATION: R-13 KRFT FACE
   d. CEILING: 2X4 "T" GRID DROP TYPE – 93" FROM EXISTING FLOOR
   e. ROOFING: EPDM RUBBER - BLACK
   f. VENTING: NONE
   g. TIE DOWNS: NONE
   h. GUTTER: NONE
5. **DOORS:**
   a. EXT. DR: (1) 36" X 80" FOAM INSULATED TRAILER TYPE DOOR WITH 14"X14" VISION & LOCKSET
   b. INT. DR: NONE
   c. INT. DR: NONE
   d. INT. DR: NONE
6. **WINDOWS:**
   a. STD SIZE: (2) 24" X 36" WITH SPEAK-THRU, HALF ROUND TICKET WINDOW AND STAINLESS STEEL SHELF
   b. STD SIZE: NONE
   c. BLINDS: NONE
7. **ELECTRIC:**
   a. LOAD CENTER: SURFACE MOUNT EXTERIOR (1) 120/240V. SINGLE PHASE 100 AMP
   b. LIGHTS: (1) 2' X 2' DROP IN TYPE FLUORESCENT
   c. EXTERIOR LIGHTS: (1)150 WATT QUARTZ HALOGEN SECURITY LIGHT
   d. EXIT SIGN: NONE

8. **ELECTRICAL:**
   a. SWITCH: (2) 110V, 15AMP TOGGLE - GROUNDED
   b. RECEIPTS: (2) 110V 15 AMP DUPLEX TYPE - GROUNDED

c. RECEIPTS: (1) 110V 15 AMP DEDICATED FOR A/C
d. RACEWAY: 14/2 & 12/2 WITH GROUND COPPER BX – METAL JACKET
e. FAN: NONE

9. **HEATING/VENTILATION/AIR CONDITIONING**
   a. HEAT: 6' ELECTRIC BASE HEAT – DEDICATED CIRCUIT
   b. COOL: 6500 BTU WALL MOUNTED A/C UNIT – DEDICATED CIRCUIT
   c. DUCT: NONE
   d. SUPPLY: NONE
   e. RETURN: NONE
   f. THERMOSTAT: ON AC & BASE HEAT
   g. FAN: NONE

10. **FURNISHING**
   a. COUNTER: 2' X 5'-4"

PART 3 - EXECUTION

3.01 ATHLETIC FIELD EQUIPMENT

A. Establishment of subgrade shall be completed under Section 02300, EARTHWORK.

B. Install equipment at locations indicated on the Drawings in strict accordance with manufacturer's printed instructions. All non-fixed equipment shall be assembled by the contractor.

3.02 CLEANING

A. Upon completion of work in any given area, remove all rubbish and debris from the work area and leave in clean condition.

END OF SECTION

G:\713050\Specs\newton so hs_complete spec.doc

ALUMINUM SEATING SYSTEM

SECTION 13126

PART 1 – GENERAL

1.01 GENERAL PROVISIONS

A. Attention is directed to the CONTRACT AND GENERAL CONDITIONS and all Sections within DIVISION 01 - GENERAL REQUIREMENTS which are hereby made a part of this Section of the Specifications.

1.02 RELATED WORK/RELATED SECTION

1. Section 02300 – Earthwork
2. Section 03300 – Cast-In-Place Concrete
3. Section 13127 – Modular Pressbox

1.03 SCOPE OF WORK

Furnish an elevated all-aluminum bleacher as shown on plans.

1.04 DESIGN CRITERIA

A. All material and workmanship shall be in accordance with the following:

AISC Manual, 8th Edition
ACI Building Code for Reinforced Concrete
Aluminum Association of America
7th Edition Building Code of the State of Massachusetts

B. Design Loads:

Dead Load	6 psf	seat and footboards risers, etc.
Live Load	120 psf	to structural member
	120 plf	seatboards
	120 plf	footboards (individually)
Design Wind Speed	100 mph	on projected vertical surface
Sway	24 plf	parallel per ft. of seat parallel to seat run
	10 plf	perpendicular per foot of seat

C. Understructure Criteria:

The following criteria are used to establish a minimum requirement for strength, stiffness and rigidity of the understructure components.

Footboard Support Members:
Moment of Inertia: 0.72 in^4
Minimum Section Modulus: 0.37 in^3
Vertical Support Members (Seating Frames):
Cross Sectional Area: 0.65 in^2
Radius of Gyration: 0.97 in
Vertical Support Members (Press Box Frames):
Cross Sectional Area: 0.86 in^2
Radius of Gyration: 0.97 in
Cross Brace Members:
Cross Sectional Area: 0.45 in^2
Radius of Gyration: 0.24 in

1.05 QUALITY ASSURANCE

A. Manufacturer: Company specializing in spectator seating with a minimum of 10 years experience in manufacturing bleacher seating.

B. Engineer Qualifications: The grandstand shall be designed under the supervision of a professional engineer registered in the State of Massachusetts.

C. Warranty: Product shall be guaranteed for five (5) years on the structure and three (3) years on the finish together with labor. Damage resulting from abnormal use, vandalism, or incorrect installation (if done by other than authorized installer of the manufacturer) is not applicable. Any exposed mill finish aluminum surface will become discolored due to oxidation which is a natural phenomenon. Manufacturer will not be responsible or liable for oxidation of mill finish aluminum.

PART 2 - PRODUCTS

2.01 ACCEPTABLE MANUFACTURER

An acceptable manufacturer for the bleacher is Dant Clayton Corporation, 1500 Bernheim Lane, Louisville, KY 40210, 800-626-2177. Regardless of manufacturer, the bleacher system shall meet the requirements as set forth in this specification.

2.02 MATERIALS

A. Understructure:

1. Understructure shall be fabricated from 6061-T6 alloy aluminum extrusions.

2. Vertical members shall be 2 7/8” o.d. tubing or 3” angle.

3. Horizontal members and footboard supports shall be 3” x 2 7/8” channel or 3” angle.

4. Cross braces and diagonals shall be 2 ¼” x 7/8” channel or 2” angle.

5. Handrail support shall be 2 5/8” o.d. tubing.

6. The understructure shall be assembled from the above items in an interlocking design and 7/16” x 3 ½” hot-dipped galvanized bolts.

7. The structure shall be designed so that in the event of accidental damage, the sub-component parts may be replaced using common hand tools. Field welding for repair purposes shall not be considered.

B. Guardrail Systems:

1. Guardrails shall be of anodized aluminum extruded channel, 3 x 2 7/8", 6061-T6 alloy, anodized to clear 204R1.

2. The guardrail system shall be of interlocking design with positive through bolt fastening. The top rail shall be designed to fully cover the rail support posts for a totally snag-free area and eliminate the potential of sharp edge contact with the spectators.

3. Grabrails shall be extruded aluminum pipe of 6063-T6 alloy, 1 – 15/16" o.d.

4. Chain link fence shall be 2" mesh, 6 gauge vinyl coated fabric.

C. Extrusions:

1. Seats shall be 6063-T6 extruded aluminum with a fluted surface and a wall thickness of .078". Seatboards shall be a minimum of 9½" wide actual, with outside legs of 1 ¾" actual vertical height, and shall have two internal legs with a vertical height of 2 5/8". Seatboards shall attach with one 3/8" diameter bolt and shall be designed for positive physical fastening. Bolt clips, bolt runners or other friction type fastening devices are not acceptable. Seats shall have a clear anodized finish.

2. The deck system shall be configured so that there are no openings greater than ¼". Footboards shall be 6063-T6 extruded aluminum with a fluted surface and a wall thickness of .078". Each footboard member (individually) shall have two internal legs with 2 1/8" actual vertical height. All footboards shall attach without the use of hardware. Attachment shall be positive snap and interlock with the support structure. Use of bolt clips, bolt runners, or other friction type fastening devices are not acceptable. Footboards shall be mill finish.

3. Riserboards shall be 6063-T6 extruded aluminum and shall be powder coated in one of manufacturer's standard colors to be selected by architect.

D. Walking Surface Requirement
Factory Blasted Slip Resistant Finish

1. All aluminum decking intended for use as a walking surface, including walkways, aisles, walking surfaces in seating sections, stairs, ramps, platforms, handicap areas, and landings, will exhibit a slip resistant surface treatment intended to minimize the effects of wet conditions on pedestrian safety.

2. This surface treatment will increase the slip resistance of mill finished aluminum to achieve a slip index (coefficient of friction) of 0.80 or higher in all directions of travel, including parallel to seating, as measured by the Variable Incidence Tribometer (VIT), **under wet conditions** as well as dry conditions. This testing machine is referenced in ASTM F-1679, Standard Test Method for Using a Variable Incidence Tribometer.

3. An independent test substantiating both the minimum required .80 coefficient of friction and the durability performance of the slip resistance feature must be provided with the bid. One independent laboratory capable of performing this testing is Artech Testing LLC in Chantilly, Virginia (703-378-7263).

E. Stairs:

1. Shall conform to all above pertinent criteria consistent with the component design of the grandstand.
2. Shall be self-supporting and shall not attach to or be suspended from any footboard of decking member.

F. Aisles:

Aisles shall be designed so that all vertical and horizontal areas within the 6' bay of the aisles area shall be fully closed.

G. Ramps and Ramp Platforms:

1. Frames shall be 9” x 1.40 extruded aluminum mill finish channel with 3” x 1.4” extruded aluminum mill finish vertical channel columns.

2. Treads shall be 6063-T6 extruded aluminum with a fluted surface and a minimum wall thickness of .078”. Minimum vertical height of treads shall be 1.75” actual. Treads shall be mill finish.

H. Hardware:

1. Bolts used for field installation shall be hot dipped galvanized.

2. Primary connections, i.e. seat, crossbrace, handrail (rail and posts) shall be made with minimum of 3/8” diameter hardware.

3. End Caps – All end caps (seatboard, footboard and handrail) shall be cast aluminum.

PART 3 - EXECUTION

3.01 INSTALLATION

A. The grandstand shall require a minimal expenditure of time to be assembled for use. It will not be necessary to assemble underframe, distinguish between anodized and mill finishes, field drill, install rivets, attach ground sills, establish overhang distance, or select different hardware.

B. Installation: Shall be handled directly by the manufacturer or by a factory certified installation subcontractor.

C. Erect per plans, shop drawings and specifications.

3.02 CLEANING

A. Clean all surfaces according to manufacturer’s recommendations.

B. Remove all packaging and construction debris.

END OF SECTION

G:\713050\Specs\newton so hs_complete spec.doc

MODULAR PRESSBOX

SECTION 13127

PART 1 – GENERAL

1.01 GENERAL PROVISIONS

A. Attention is directed to the CONTRACT AND GENERAL CONDITIONS and all Sections within DIVISION 01 - GENERAL REQUIREMENTS which are hereby made a part of this Section of the Specifications.

1.02 SCOPE OF WORK

Furnish a prefabricated, modular pressbox (including ADA lift) equal to that as provided by Dant Clayton, or approved equal. Pressbox shall have Massachusetts 5A Fire Rated Construction. Pressbox manufacturer must be certified and approved by Massachusetts Department of Public Safety. All bidders must list pressbox manufacturer on bid form. Failure to list certified pressbox manufacturer will disqualify bid.

Pressbox must be fully constructed per Massachusetts "Pre-Manufactured Modular Building" laws and have third party plan review, approval and final inspection prior to delivery. Partially constructed press boxes that are shipped in multiple pieces and constructed on site, requiring local inspections, local permits, separate local drawings submissions and on site assembly, are not allowed.

1.03 SUBMITTALS

A. Plan view and wall section showing complete detail of layout, connection and trim detail.

B. Schedule of Work Experience, including names of contacts and phone numbers; 30 jobs minimum.

C. List of three (3) similar jobs - should the owners (3 persons maximum) request a site visitation to these jobs, it will be at the bidder's expense.

D. Resume including Corporate Officers, Sales Representatives, Technical Advisor, Project Manager and Job Site Superintendent.

E. Project schedule, including phasing with other trades and designation for all tasks, milestone dates for drawing submittal, fabrication time, key material delivery dates and designated dates of installation.

1.04 DESIGN CRITERIA

A. All electrical components shall be UL listed.

B. Design Loads

Live Load	100 psf	floor
	100 psf	roof
Wind	30 psf	

1.05 QUALITY ASSURANCE

A. Manufacturer: Company specializing in modular building construction with a minimum of 5 years experience in manufacturing press boxes.

B. Engineer Qualifications: The pressbox shall be approved by a registered professional engineer.

C. Warranty. Pressbox shall be guaranteed for one (1) year against defective material or workmanship. Damage resulting from abnormal use or vandalism is not applicable.

PART 2 - PRODUCTS

2.01 PRESS BOX

A. The press box shall be a pre-manufactured modular unit certified under Massachusetts Manufactured Buildings Program MC-216.

Floor Construction

1. Bottom Board:
.030 gauge one-piece galvanized steel bottom pan.
1/2" CDX Dricon fire-retardant treated plywood.

2. Insulation:
6" R-19 fiberglass batts, with vapor barrier.

3. Joists: (Welded Framing)
60CSJ16, 6" x 16ga. galvanized steel joists, on 16" centers, longitudinal framing.

4. Decking:
3/4" Sturdifloor, underlayment grade, Dricon fire-retardant treated, tongue and groove fir plywood, (Index 24" O.C.).

5. Covering:
1/8" Armstrong Excelon vinyl composition tile, Cottage Tan in press box

Dec-k-ing .060 polyester reinforced skid and spike resistant PVC membrane, fully adhered in covered platform areas.

6. Molding:
4" Resilient vinyl base.

Wall Construction

1. Studs: (Welded Framing)
362CSJ18, 3-5/8" x 18ga. galvanized steel studs, on 16" centers.

2. Top and Bottom Plates:
3-5/8" x 18ga. galvanized steel U-channels.

3. Headers:
As span and design load requires

4. Ceiling Height:
8'-6" x 8'3", front to back sub-ceiling.
7'-10" Finished ceiling height

5. Covering:
5/8" vinyl-faced gypsum panels, Class A F.S.R.

6. Insulation:
3-1/2" R-11 fiberglass batts with vapor barrier.

7. Sheathing:
1/2" CDX Dricon fire-retardant treated plywood with house wrap air infiltration barrier.

8. Siding:
Atas 0-032 Opaline OPF flush raised-panel aluminum exterior siding with Kynar 500 finish and concealed fasteners applied horizontally. Color to be determined by Owner.

Roof Construction

1. Joists: (Welded Framing)
   80CSJ16, 8” x 16ga. welded galvanized steel joists, 16” O.C. spacing.

2. Overhang:
   15-1/2” over front wall; 6” over rear wall.
   .019 aluminum fascia with perforated aluminum soffit panels.

3. Sub Ceiling:
   5/8” type-x fire-rated gypsum board, class 1 F.S.R.

4. Ceiling:
   Exposed t-grid acoustical suspended ceiling with US Gypsum 2’ x 2’ humidity-resistant tile fissured tile

5. Insulation:
   6” R-19 fiberglass batts w/ vapor barrier.

6. Decking:
   3/4” Sturdifloor, underlayment grade, Dricon fire-retardant treated, tongue and groove fir plywood.

7. Covering:
   .060 single-ply EPDM rubber membrane, fully adhered.

Windows

1. Milgard #5120 “Classic Series” horizontal sliders with extruded vinyl frames, AAMA LC-25 structural rating, with 1” clear insulated tempered glass and removable insect screens. --stained jambs and casing

Doors (Exterior)

1. 36”x80” Ceco “Envoy” 18 Ga. insulated galvanized steel with galvanized steel jambs, rigid vinyl weather stripping, aluminum threshold, keyed lever handled lockset, tempered safety glass window and hydraulic closer

Electrical

1. Service Entrance Panel
   Square D QO112M100 with Main Disconnect; rated at 120/240v, single phase, 100 amp capacity.

2. Receptacles:
   Pass & Seymour 125 volt/15 amp duplex, spec-grade, along the rear wall.

   Wiremold 5400 Series two-piece multi-channel, dual voltage, non metallic surface raceway along front wall below scorer’s counter, outlets on 48” centers.

3. Lighting:
   Lithonia 2GT432A12 recessed fluorescent troffer lights with parabolic plastic cube lens

4. Circuits:
   All branch circuit wiring is minimum #12 THHN encased in EMT thinwall conduit.

Scorer’s Counter

1. 18” deep x 3/4” lauan grade plywood with 1-1/2” x 2” edge, surfaced with .060 plastic laminate, Nevamar Neutra Matrix.

PART 3 – EXECUTION

3.01 INSTALLATION

A. Installation: Shall be handled directly by the Contractor or by a factory certified installation subcontractor.

B. Erect per plans, shop drawings, and specifications.

C. Owner to provide access to site for crane.

3.02 CLEANING

A. Clean all surfaces according to manufacturer's recommendations.

B. Remove all packaging and construction debris.

END OF SECTION

G:\713050\Specs\newton so hs_complete spec.doc

VERTICAL PLATFORM LIFT

SECTION 13320

PART 1 – GENERAL

1.01 GENERAL PROVISIONS

A. Attention is directed to the CONTRACT AND GENERAL CONDITIONS and all Sections within DIVISION 01 - GENERAL REQUIREMENTS which are hereby made a part of this Section of the Specifications.

1.02 SCOPE OF WORK

A. All materials and labor necessary to complete the installation of the vertical platform lift.

B. Obtain all information affecting work at job site. Include verification of field dimensions, anchoring and storage. Verify voltages and outlets on electrical drawings.

1.03 REFERENCES

A. Unit shall be designed and manufactured in accordance with the ICC/A117.1, NEC and ASME A18.1 Guidelines for vertical platform lifts in public places.

B. All designs, clearances, construction, workmanship and installation shall be in accordance with the requirements and code adopted by the authority having jurisdiction. The platform lift shall be subject to local, city and state approval prior to and following installation.

1.04 SYSTEM DESCRIPTION

A. The product described herein manufactured by National Wheel-O-Vator, or equal, is a vertical platform lift consisting of a machine tower with lifting platform, selected and dimensioned to provide adequate lifting height to suit the individual requirements of access to the proposed modular pressbox.

B. Performance:

a. Rated Load: 750 pound capacity
b. Travel Speed: 30 feet per minute
c. Lifting Height: 12’ (144”)
d. Platform size: 37” x 51”, with non-skid surface

1.05 SUBMITTALS

A. Submit shop drawings and manufacturer’s literature for approval. Drawings shall show dimensional and wiring requirements.

1.06 QUALITY ASSURANCE

A. Manufacturer: Company with not less than twenty (20) years of experience in the design and fabrication of vertical platform lifts.

B. Technical Services: Manufacturer and authorized dealer shall work with the engineer and contractor to adapt the platform lift product to the design and structural requirements of the site, and code requirements.

C. Warranty: Unit shall have a four (4) year limited parts warranty on the basic unit, including all electrical and drive system components.

1.07 MAINTENANCE

A. Maintenance of the platform lift unit shall consist of regular cleaning of the unit and regular inspection at intervals not longer than every six (6) months. Rule 10.2.1 of ASME A18.1 requires all vertical platform lifts be inspected every six (6) months.

PART 2 - PRODUCTS

2.01 ACCEPTABLE MANUFACTURER

A. National Wheel-O-Vator, a division of ThyssenKrupp Access, Model CDE-144, or equal.

B. Each substitution request shall include the name of the material for which it is to be substituted and a complete description of the proposed substitutions including drawings, performance and test data, a list of project similar in scope, photographs of existing installation, design differences and other information necessary for evaluation.

2.02 FABRICATION

A. Platform shall be constructed of 12-gauge minimum zinc clad steel. If unit is not installed in a 3-inch pit, a stationary ramp shall be provided that extends under the lower landing gate/door.

B. Platform side panels must be 42” high. Side panel framework shall be a minimum of 1” x 1 ½” x 0.125 steel tubing. Solid infill panel shall be a minimum of 24-gauge zinc clad steel.

C. The mainframe support tubing shall be a combination of square and rectangular tubing with a minimum 0.120 wall thickness.

D. Carriage platform supports shall be a minimum of 1” x 2” this steel flat bar and carriage uprights shall be a minimum of ½” this steel flat bar. Cam rollers shall be used for axial carriage guidance and cam-followers with wear pads used for horizontal stability.

E. Loaded fasteners shall be grade five or higher. Locking fasteners shall be used in all critical locations.

F. The machine tower structural side plates shall be of 12-gauge steel and front and back covers shall be 18-gauge zinc clad steel minimum.

G. The drive mechanism shall be a rotating nut on a stationary 1 ½” diameter acme screw with a secondary safety nut.

H. The motor shall be 3 HP, 230 V, 3-phase with inverter drive.

I. The operating control circuit shall be 24-volts.

J. Finish shall be electro statically applied powder coating, oven baked to cure.

K. All upper final limit switches shall be provided.

L. Color shall be selected from manufacturer’s standard color and approved by the City.

M. A constant pressure up/down control switch shall be installed at each landing level and on the platform.

N. Lift shall have an enclosure framework of 1 ½” square aluminum tubing and shall have closure panels of 18-gauge zinc clad steel minimum. The enclosure shall extend a minimum of six (6) inches above the actual lifting heights of the unit, which prevents access to the underside of the platform.

O. Lift shall be equipped with a 42” minimum high upper landing gate, 42” high platform gate which rides on the platform and lower landing gate which remains at lower level to prevent access to the underside of the platform while in the raised position. Gate framework is aluminum tubing with solid panels of 18-gauge zinc clad steel minimum. All gates shall have a combination mechanical lock with positive opening electrical contacts.

P. An emergency stop/illuminated alarm switch shall be provided on the car as a means of signaling for assistance in the event of an emergency.

Q. A grab rail shall be provided on the platform.

R. The main lift nut shall be equipped with a continuous lube system to distribute lubrication between main lift nut and the acme screw.

S. Unit shall be equipped with the “simplex” base and carriage design (or equal), which allows the carriage to be folded to reduce the shroud and carriage width to 10”.

T. Unit must be assembled and tested in the factory before shipment and installation. Contractor to provide written statement from the manufacturer confirming that this process was completed.

PART 3 - EXECUTION

ACCEPTABLE INSTALLERS

A. Subcontractor Qualifications: A company that is listed as an authorized National Wheel-O-Vator, or equal, distributor.

B. Electrical devices, services and final connections shall be by a qualified electrician.

3.02 INSTALLATION

A. Unit shall be installed and operated in accordance with the ICC/A117.1, NEC and ASME A18.1 Guidelines.

B. A dedicated electrical circuit with a lockable service disconnect switch rated in accordance with manufacturers requirements shall be provided by the electrical contractor.

C. All work shall be coordinated with the General Contractor and Engineer.

D. Leave standard electrical connection drawings with electrical contractor to make final electrical connection.

E. The installation of the vertical platform lift shall be made in accordance with the approved plans and specifications and the manufacturers installation instructions.

3.03 FIELD QUALITY CONTROL

A. Load the vertical lift to rated capacity and test for several cycles to insure proper operation. No mechanical failures shall occur and no wear that would affect the reliability of the unit shall be detected.

END OF SECTION

G:\713050\Specs\newton so hs_complete spec.doc

BASIC ELECTRICAL REQUIREMENTS

SECTION 16010

PART 1 - GENERAL

1.01 GENERAL PROVISIONS

A. Attention is directed to the CONTRACT AND GENERAL CONDITIONS and all Sections within DIVISION 01 - GENERAL REQUIREMENTS which are hereby made a part of this Section of the Specifications.

1.02 SECTION INCLUDES

A. Basic Electrical Requirements specifically applicable to Division 16 Sections, in addition to Division 1 - General Requirements.

1.03 REFERENCES

A. ANSI/NFPA 70 - National Electrical Code.

1.04 SUBMITTALS

A. Submit shop drawings and product data grouped to include complete submittals of related systems, products, and accessories in a single submittals.

B. Mark dimensions and values in units to match those specified.

1.05 REGULATORY REQUIREMENTS

A. Conform to applicable State Building Code.

B. Electrical: Conform to National Electrical Code with State amendments.

C. Obtain permits, and request inspections from authority having jurisdiction.

1.06 PROJECT/SITE CONDITIONS

A. Install Work in locations shown on Drawings, unless prevented by Project conditions.

B. Prepare drawings showing proposed rearrangement of Work to meet Project conditions, including changes to Work specified in other Sections. Obtain permission of Architect/Engineer before proceeding.

1.07 SEQUENCING AND SCHEDULING

A. Construct Work in sequence under provisions of Section 01010.

END OF SECTION

G:\713050\Specs\newton so hs_complete spec.doc

CONDUIT

SECTION 16111

PART 1 - GENERAL

1.01 GENERAL PROVISIONS

B. Attention is directed to the CONTRACT AND GENERAL CONDITIONS and all Sections within DIVISION 01 - GENERAL REQUIREMENTS which are hereby made a part of this Section of the Specifications.

1.02 SECTION INCLUDES

A. Metal conduit.

B. Flexible metal conduit.

C. Liquidtight flexible metal conduit.

D. Electrical metallic tubing.

E. Nonmetallic conduit.

F. Electrical nonmetallic tubing.

G. Flexible nonmetallic conduit.

H. Fittings and conduit bodies.

1.03 RELATED SECTIONS

A. Section 07270 - Fire Stopping.

B. Section 16130 - Boxes.

C. Section 16170 - Grounding and Bonding.

D. Section 16190 - Supporting Devices.

E. Section 16195 - Electrical Identification.

1.04 REFERENCES

A. ANSI C80.1 - Rigid Steel Conduit, Zinc Coated.

B. ANSI C80.3 - Electrical Metallic Tubing, Zinc Coated.
C. ANSI C80.5 - Rigid Aluminum Conduit.

D. ANSI/NEMA FB 1 - Fittings, Cast Metal Boxes, and Conduit Bodies for Conduit and Cable Assemblies.

E. ANSI/NFPA 70 - National Electrical Code.

F. NECA "Standard of Installation."

G. NEMA RN 1 - Polyvinyl Chloride (PVC) Externally Coated Galvanized Rigid Steel Conduit and Intermediate Metal Conduit.

H. NEMA TC 2 - Electrical Plastic Tubing (EPT) and Conduit (EPC-40 and EPC-80).

I. NEMA TC 3 - PVC Fittings for Use with Rigid PVC Conduit and Tubing.

1.05 DESIGN REQUIREMENTS

A. Conduit Size: ANSI/NFPA 70.

1.06 SUBMITTALS

A. Product Data: Provide for metallic conduit , flexible metal conduit , liquidtight flexible metal conduit , metallic tubing , nonmetallic conduit , flexible nonmetallic conduit , nonmetallic tubing , fittings , conduit bodies.

1.07 PROJECT RECORD DOCUMENTS

A. Accurately record actual routing of conduits larger than 2 inches.

1.08 REGULATORY REQUIREMENTS

A. Conform to requirements of ANSI/NFPA 70.

B. Furnish products listed and classified by Underwriters Laboratories, Inc. testing firm acceptable to authority having jurisdiction as suitable for purpose specified and shown.

1.09 DELIVERY, STORAGE, AND HANDLING

A. Deliver, store, protect, and handle Products to site.

B. Protect conduit from corrosion and entrance of debris by storing above grade. Provide appropriate covering.

C. Protect PVC conduit from sunlight.

1.10 PROJECT CONDITIONS

A. Verify that field measurements are as shown on Drawings.

B. Verify routing and termination locations of conduit prior to rough-in.

C. Conduit routing is shown on Drawings in approximate locations unless dimensioned. Route as required to complete wiring system.

PART 2 - PRODUCTS

2.01 CONDUIT REQUIREMENTS

A. Minimum Size: 1/2 inch unless otherwise specified.

B. Underground Installations:
   a. In or Under Slab on Grade: Use rigid steel conduit ,intermediate metal conduit , plastic coated conduit , thickwall nonmetallic conduit.
      1. Minimum Size: 3/4 inch.

C. Outdoor Locations, Above Grade: Use rigid steel and , intermediate metal conduit.

D. Wet and Damp Locations: Use rigid steel and aluminum conduit , intermediate metal conduit.

E. Dry Locations:
   1. Concealed: Use rigid steel , intermediate metal conduit , electrical metallic tubing
   2. Exposed: Use rigid steel and aluminum conduit , intermediate metal conduit.

2.02 METAL CONDUIT

A. Rigid Steel Conduit: ANSI C80.1.

B. Rigid Aluminum Conduit: ANSI C80.5.

C. Intermediate Metal Conduit (IMC): Rigid steel.

D. Fittings and Conduit Bodies: ANSI/NEMA FB 1; material to match conduit.

2.03 FLEXIBLE METAL CONDUIT

A. Description: Interlocked steel aluminum construction.

B. Fittings: ANSI/NEMA FB 1.

2.04 LIQUIDTIGHT FLEXIBLE METAL CONDUIT

A. Description: Interlocked steel aluminum construction with PVC jacket.

B. Fittings: ANSI/NEMA FB 1.

2.05 ELECTRICAL METALLIC TUBING (EMT)

A. Description: ANSI C80.3; galvanized tubing.

B. Fittings and Conduit Bodies: ANSI/NEMA FB 1; steel set screw type.

2.06 NONMETALLIC CONDUIT

A. Description: NEMA TC 2; Schedule 40 80 PVC.

B. Fittings and Conduit Bodies: NEMA TC 3.

PART 3 - EXECUTION

3.01 INSTALLATION

A. Install conduit in accordance with NECA "Standard of Installation."

B. Install nonmetallic conduit in accordance with manufacturer's instructions.

C. Arrange supports to prevent misalignment during wiring installation.

D. Support conduit using coated steel or malleable iron straps, lay-in adjustable hangers, clevis hangers, and split hangers.

E. Group related conduits; support using conduit rack. Construct rack using steel channel ; provide space on each for 25 percent additional conduits.

F. Fasten conduit supports to building structure and surfaces under provisions of Section 16190.

G. Do not support conduit with wire or perforated pipe straps. Remove wire used for temporary supports

H. Do not attach conduit to ceiling support wires.

I. Arrange conduit to maintain headroom and present neat appearance.

J. Route exposed conduit parallel and perpendicular to walls.

K. Route conduit installed above accessible ceilings parallel and perpendicular to walls.

L. Route conduit in and under slab from point-to-point.

M. Do not cross conduits in slab.

N. Maintain adequate clearance between conduit and piping.

O. Maintain 12 inch (300 mm) clearance between conduit and surfaces with temperatures exceeding 104 degrees F (40 degrees C).

P. Cut conduit square using saw or pipecutter; de-burr cut ends.

Q. Bring conduit to shoulder of fittings; fasten securely.

R. Join nonmetallic conduit using cement as recommended by manufacturer. Wipe nonmetallic conduit dry and clean before joining. Apply full even coat of cement to entire area inserted in fitting. Allow joint to cure for 20 minutes, minimum.

S. Use conduit hubs or sealing locknuts to fasten conduit to sheet metal boxes in damp and wet locations and to cast boxes.

T. Install no more than equivalent of three 90-degree bends between boxes. Use conduit bodies to make sharp changes in direction, as around beams. Use hydraulic one-shot bender to fabricator factory elbows for bends in metal conduit larger than 2 inch (50 mm) size.

T. Avoid moisture traps; provide junction box with drain fitting at low points in conduit system.

U. Provide suitable fittings to accommodate expansion and deflection where conduit crosses seismic , control and expansion joints.

V. Provide suitable pull string in each empty conduit except sleeves and nipples.

W. Use suitable caps to protect installed conduit against entrance of dirt and moisture.

X. Ground and bond conduit under provisions of Section 16170.

Y. Identify conduit under provisions of Section 16195.

3.02 INTERFACE WITH OTHER PRODUCTS

A. Install conduit to preserve fire resistance rating of partitions and other elements, using materials and methods under the provisions of Section 07270.

B. Route conduit through roof openings for piping and ductwork or through suitable roof jack with pitch pocket. Coordinate location with roofing installation.

END OF SECTION

G:\713050\Specs\newton so hs_complete spec.doc

DUCTBANK

SECTION 16118

PART 1 - GENERAL

1.01 GENERAL PROVISIONS

A. Attention is directed to the CONTRACT AND GENERAL CONDITIONS and all Sections within DIVISION 01 - GENERAL REQUIREMENTS which are hereby made a part of this Section of the Specifications.

1.02 SECTION INCLUDES

A. Metal conduit.

B. Duct.

C. Manholes.

1.03 RELATED SECTIONS

A. Section 02222 - Excavation.

B. Section 02222 - Backfilling.

1.04 REFERENCES

A. ANSI C80.1 - Rigid Steel Conduit, Zinc-Coated.

B. ANSI/IEEE C2 - National Electrical Safety Code.

C. ANSI/NEMA FB 1 - Fittings, Cast Metal Boxes, and Conduit Bodies for Conduit and Cable Assemblies.

D. ANSI/NFPA 70 - National Electrical Code.

E. ASTM A48 - Gray Iron Castings.

F. NEMA TC 2 - Electrical Plastic Tubing (EPT) and Conduit (EPC-40 and EPC-80).

G. NEMA TC 3 - PVC Fittings for Use with Rigid PVC Conduit and Tubing.

H. NEMA TC 6 - PVC and ABS Plastic Utilities Duct for Underground Installation.

I. NEMA TC 8 - Extra-Strength PVC Plastic Utilities Duct for Underground Installation.

J. NEMA TC 9 - Fittings for ABS and PVC Plastic Utilities Duct for Underground Installation.

K. NEMA TC 10 - PVC and ABS Plastic Communications Duct and Fittings for Underground Installation.

1.05 SUBMITTALS

A. Product Data: Provide for metallic conduit , nonmetallic conduit , manhole accessories.

B. Manufacturer's Instructions: Include instructions for storage, handling, protection, examination, preparation, and installation.

1.06 PROJECT RECORD DOCUMENTS

A. Accurately record actual locations of exact routing of ductbank.

B. Accurately record actual locations of each manhole.

1.07 QUALIFICATIONS

A. Manufacturer: Company specializing in manufacturing Products specified in this Section with minimum three years documented experience.

1.08 REGULATORY REQUIREMENTS

A. Conform to requirements of ANSI/NFPA 70. ANSI/IEEE C2.

B. Furnish products listed and classified by Underwriters Laboratories, Inc. as suitable for purpose specified and shown.

1.09 DELIVERY, STORAGE, AND HANDLING

A. Deliver, store, protect, and handle Products.

B. Accept conduit on site. Inspect for damage.

C. Protect conduit from corrosion and entrance of debris by storing above grade. Provide appropriate covering.

1.10 PROJECT CONDITIONS

A. Verify that field measurements are as shown on Drawings.

B. Verify routing and termination locations of duct bank prior to excavation for rough-in.

C. Verify locations of manholes prior to excavating for installation.

D. Duct bank routing is shown on Drawings in approximate locations unless dimensions are indicated. Route as required to complete duct system.

E. Manhole locations are shown on Drawings in approximate locations unless dimensions are indicated. Locate as required to complete ductbank system.

PART 2 PRODUCTS

2.01 RIGID METAL CONDUIT

A. Rigid Steel Conduit: ANSI C80.1.

B. Fittings: ANSI/NEMA FB 1; steel.

2.02 PLASTIC CONDUIT

A. Manufacturers:

1. Carlon

B. Description: NEMA TC 2; Schedule 40 80 PVC.

C. Fittings and Conduit Bodies: NEMA TC 3.

2.03 PRECAST CONCRETE MANHOLES

A. Manufacturers:

1. Rotundo.

B. Construction: Modular sections with tongue-and-groove joints.

C. Reinforcing: AASHTO Classification H-20.

D. Shape: Rectangular.

E. Nominal Inside Dimensions: as indicated on drawings and specified by Telephone Company or Utility Co.

F. Frames and Covers: ASTM A48; Class 30B gray cast iron, machine finished with flat bearing surfaces. Provide cover marked ELECTRIC or TELEPHONE to indicate utility. Size per utility.

G. Duct Entry Size: as indicated on drawings.

H. Cable Rack Inserts: Minimum load rating of 800 pounds Locate at 3 feet on center.

2.04 ACCESSORIES

A. Underground Warning Tape: 4 inch wide plastic tape, detectable type, colored yellow with suitable warning legend describing buried electrical lines.

PART 3 EXECUTION

3.01 EXAMINATION

A. Verify that excavation, base material installation, and compaction is completed.

3.02 PREPARATION

A. Prepare excavation in accordance with manhole manufacturer's instructions.

3.03 DUCT BANK INSTALLATION

A. Install duct in accordance with manufacturer's instructions.

B. Install power and communications duct to locate top of ductbank minimum 36 inches below grade.

C. Install duct with minimum slope of 4 inches per 100 feet. Slope duct away from building entrances.

D. Cut duct square using saw or pipe cutter; de-burr cut ends.

E. Insert duct to shoulder of fittings; fasten securely.

F. Join nonmetallic duct using adhesive as recommended by manufacturer.

G. Wipe nonmetallic duct dry and clean before joining. Apply full even coat of adhesive to entire area inserted in fitting. Allow joint to cure for 20 minutes, minimum.

H. Install no more than equivalent of three 90-degree bends between pull points.

I. Provide suitable fittings to accommodate expansion and deflection where required.

J. Terminate duct at manhole entries using end bell.

K. Stagger duct joints vertically in concrete encasement 6 inches minimum.

L. Use suitable separators and chairs installed not greater than 4 feet on centers.

M. Band ducts together before placing concrete.

N. Securely anchor duct to prevent movement during concrete placement.

O. Provide minimum 3 inch concrete cover at bottom, top, and sides of ductbank.

P. Provide suitable pull string in each empty duct except sleeves and nipples.

Q. Swab duct. Use suitable caps to protect installed duct against entrance of dirt and moisture.

R. Interface installation of underground warning tape with backfilling specified in Section 02225. Install tape 6 inches below finished surface.

3.04 PRECAST MANHOLE INSTALLATION

A. Install and seal precast sections in accordance with manufacturer's instructions.

B. Install manholes plumb.

C. Use precast neck and shaft sections to bring manhole cover to finished elevation.

END OF SECTION

G:\713050\Specs\newton so hs_complete spec.doc

BUILDING WIRE AND CABLE

SECTION 16123

PART 1 - GENERAL

1.01 GENERAL PROVISIONS

A. Attention is directed to the CONTRACT AND GENERAL CONDITIONS and all Sections within DIVISION 01 - GENERAL REQUIREMENTS which are hereby made a part of this Section of the Specifications.

1.02 SECTION INCLUDES

A. Building wire and cable.

B. Metal clad cable.

C. Wiring connectors and connections.

1.03 RELATED SECTIONS

A. Section 16111 - Conduit.

B. Section 16130 - Boxes.

C. Section 16195 - Identification.

1.04 REFERENCES

A. ANSI/NFPA 70 - National Electrical Code.

1.05 SUBMITTALS

A. Product Data: Provide for each cable type.

B. Manufacturer's Installation Instructions: Indicate application conditions and limitations of use stipulated by product testing agency specified under Regulatory Requirements.

1.06 REGULATORY REQUIREMENTS

A. Conform to requirements of ANSI/NFPA 70.

B. Furnish products listed and classified by Underwriters Laboratories, Inc. testing firm acceptable to authority having jurisdiction as suitable for purpose specified and shown.

1.07 PROJECT CONDITIONS

A. Verify that field measurements are as shown on Drawings.

B. Conductor sizes are based on copper.

C. Wire and cable routing shown on Drawings is approximate unless dimensioned. Route wire and cable as required to meet Project Conditions.

D. Where wire and cable routing is not shown, and destination only is indicated, determine exact routing and lengths required.

1.08 COORDINATION

A. Determine required separation between cable and other work.

B. Determine cable routing to avoid interference with other work.

PART 2 - PRODUCTS

2.01 BUILDING WIRE AND CABLE

A. Description: Single conductor insulated wire.

B. Conductor: Copper.

C. Insulation Voltage Rating: 600 volts.

D. Insulation: ANSI/NFPA 70, Type THW RHW TW THHN/THWN XHHW

2.02 METAL CLAD CABLE

A. Description: ANSI/NFPA 70, Type MC.

B. Conductor: Copper.

C. Insulation Voltage Rating: 600 volts.

D. Insulation Temperature Rating: 90 degrees C.

E. Insulation Material: Thermoplastic.

F. Armor Material: Steel.

G. Armor Design: Interlocked metal tape, Corrugated tube, Smooth tube.

H. Jacket: None.

PART 3 - EXECUTION

3.01 EXAMINATION

A. Verify that interior of building has been protected from weather.

B. Verify that mechanical work likely to damage wire and cable has been completed.

3.02 PREPARATION

A. Completely and thoroughly swab raceway before installing wire.

3.03 WIRING METHODS

A. Concealed Dry Interior Locations: Use only building wire , Type TW THW THHN/THWN XHHW insulation, in raceway.

B. Exposed Dry Interior Locations: Use only building wire , Type TW THW THHN/THWN XHHW insulation, in raceway.

C. Above Accessible Ceilings: Use only building wire , Type TW THW THHN/THWN XHHW insulation, in raceway.

D. Wet or Damp Interior Locations: Use only building wire , Type TW THW THHN/THWN XHHW insulation, in raceway.

E. Exterior Locations: Use only building wire , Type TW THW THHN/THWN XHHW insulation, in raceway.

F. Underground Installations: Use only building wire , Type TW THW THHN/THWN XHHW insulation, in raceway.

G. In Partitions: Use only building wire , Type TW THW THHN/THWN XHHW insulation, in raceway or metal clad cable.

H. Use wiring methods indicated on Drawings.

3.04 INSTALLATION

A. Install products in accordance with manufacturers instructions.

B. Use solid or stranded conductor for feeders and branch circuits 10 AWG and smaller.

C. Use stranded conductors for control circuits.

D. Use conductor not smaller than 12 AWG for power and lighting circuits.

E. Use conductor not smaller than 16 AWG for control circuits.

F. Pull all conductors into raceway at same time.

G. Use suitable wire pulling lubricant for building wire 4 AWG and larger.

H. Protect exposed cable from damage.

I. Support cables above accessible ceiling, using spring metal clips or metal plastic cable ties to support cables from structure or ceiling suspension system. Do not rest cable on ceiling panels.

J. Use suitable cable fittings and connectors.

K. Neatly train and lace wiring inside boxes, equipment, and panelboards.

L. Clean conductor surfaces before installing lugs and connectors.

M. Make splices,taps, and terminations to carry full ampacity of conductors with no perceptible temperature rise.

N. Use split bolt connectors for copper conductor splices and taps, 6 AWG and larger. Tape uninsulated conductors and connector with electrical tape to 150 percent of insulation rating of conductor.

O. Use solderless pressure connectors with insulating covers for copper conductor splices and taps, 8 AWG and smaller.

P. Use insulated spring wire connectors with plastic caps for copper conductor splices and taps, 10 AWG and smaller.

3.05 INTERFACE WITH OTHER PRODUCTS

A. Identify wire and cable under provisions of Section 16195.

B. Identify each conductor with its circuit number or other designation indicated on Drawings.

3.06 FIELD QUALITY CONTROL

A. Inspect wire and cable for physical damage and proper connection.

B. Measure tightness of bolted connections and compare torque measurements with manufacturer's recommended values.

C. Verify continuity of each branch circuit conductor.

END OF SECTION

G:\713050\Specs\newton so hs_complete spec.doc

GROUNDING AND BONDING

SECTION 16170

PART 1 - GENERAL

1.01 GENERAL PROVISIONS

A. Attention is directed to the CONTRACT AND GENERAL CONDITIONS and all Sections within DIVISION 01 - GENERAL REQUIREMENTS which are hereby made a part of this Section of the Specifications.

1.02 SECTION INCLUDES

A. Grounding electrodes and conductors.

B. Equipment grounding conductors.

C. Bonding.

1.03 REFERENCES

A. ANSI/NFPA 70 - National Electrical Code.

1.04 GROUNDING ELECTRODE SYSTEM

A. Existing Metal underground water pipe.

B. Metal frame of the building.

C. Concrete-encased electrode.

D. Rod electrode.

E. Plate electrode.

1.05 PERFORMANCE REQUIREMENTS

A. Grounding System Resistance: 5 ohms.

1.06 SUBMITTALS

A. Submit under provisions of Section 01300 .

B. Product Data: Provide data for grounding electrodes and connections.

C. Manufacturer's Instructions: Include instructions for storage, handling, protection, examination, preparation and installation of exothermic connectors.

1.07 PROJECT RECORD DOCUMENTS

A. Accurately record actual locations of grounding electrodes.

1.08 REGULATORY REQUIREMENTS

A. Conform to requirements of ANSI/NFPA 70.

B. Furnish products listed and classified by Underwriters Laboratories, Inc. as suitable for purpose specified and shown.

PART 2 - PRODUCTS

2.01 ROD ELECTRODE

A. Material: Copper-clad steel.

B. Diameter: 3/4 inch .

C. Length: 10 feet .

2.02 MECHANICAL CONNECTORS

A. Material: Bronze.

2.03 EXOTHERMIC CONNECTIONS

A. Manufacturers:

1. CAD-WELD.

2.04 WIRE

A. Material: Stranded copper.

B. Grounding Electrode Conductor: Size to meet NFPA 70 requirements.

PART 3 - EXECUTION

3.01 EXAMINATION

A. Verify that final backfill and compaction has been completed before driving rod electrodes.

3.02 INSTALLATION

A. Install Products in accordance with manufacturer's instructions.

B. Install rod electrodes at locations indicated. Install additional rod electrodes as required to achieve specified resistance to ground.

C. Provide grounding electrode conductor and connect to reinforcing steel in foundation footing where indicated.

D. Provide bonding to meet Regulatory Requirements.

E. Bond together metal siding not attached to grounded structure; bond to ground.

F. Bond together each metallic raceway, pipe, duct and other metal object.

G. Provide isolated grounding conductor for circuits supplying electronic cash registers personal computers and equipment as noted.

3.03 FIELD QUALITY CONTROL

A. Inspect grounding and bonding system conductors and connections for tightness and proper installation.

B. Use suitable test instrument to measure resistance to ground of system. Perform testing in accordance with test instrument manufacturer's recommendations using the fall-of-potential method.

END OF SECTION

G:\713050\Specs\newton so hs_complete spec.doc

ELECTRICAL IDENTIFICATION

SECTION 16195

PART 1 - GENERAL

1.01 GENERAL PROVISIONS

A. Attention is directed to the CONTRACT AND GENERAL CONDITIONS and all Sections within DIVISION 01 - GENERAL REQUIREMENTS which are hereby made a part of this Section of the Specifications.

1.02 SECTION INCLUDES

A. Nameplates and labels.

B. Wire and cable markers.

C. Conduit markers.

1.03 REFERENCES

A. ANSI/NFPA 70 - National Electrical Code.

1.04 SUBMITTALS

A. Product Data: Provide catalog data for nameplates, labels, and markers.

B. Manufacturer's Instructions: Indicate application conditions and limitations of use stipulated by Product testing agency specified under regulatory requirements. Include instructions for storage, handling, protection, examination, preparation and installation of Product.

1.05 REGULATORY REQUIREMENTS

A. Conform to requirements of ANSI/NFPA 70.

B. Furnish products listed and classified by Underwriters Laboratories, Inc. as suitable for purpose specified and shown.

PART 2 - PRODUCTS

2.01 WIRE MARKERS

A. Description: Cloth , tape , split sleeve , or tubing type wire markers.

B. Locations: Each conductor at each load connection.

C. Legend:
1. Power and Lighting Circuits: Branch circuit or feeder number indicated on drawings.

2.02 UNDERGROUND WARNING TAPE

A. Description: 4 inch wide plastic tape, colored yellow with suitable warning legend describing buried electrical lines.

PART 3 - EXECUTION

3.01 PREPARATION

A. Identify underground conduits using underground warning tape. Install one tape per trench at 3 inches below finished grade.

END OF SECTION

G:\713050\Specs\newton so hs_complete spec.doc

PANELBOARDS

SECTION 16470

PART 1 - GENERAL

1.01 GENERAL PROVISIONS

A. Attention is directed to the CONTRACT AND GENERAL CONDITIONS and all Sections within DIVISION 01 - GENERAL REQUIREMENTS which are hereby made a part of this Section of the Specifications.

1.02 WORK INCLUDED

A. Service and distribution panelboards.

B. Lighting and appliance branch circuit panelboards.

1.03 RELATED WORK

A. Section 16485 - Contractors.

1.04 REFERENCES

A. FS W-C-375 - Circuit Breakers, Molded Case, Branch Circuit and Service.

B. FS W-F-870 - Fuseholders (For Plug and Enclosed Fuses).

C. FS W-P-115 - Power Distribution Panel.

D. FS W-S-865 - Enclosed Knife Switch

E. NEMA AB 1 - Molded Case Circuit Breakers.

F. NEMA KS 1 - Enclosed Switches.

G. NEMA PB 1 - Panelboards.

H. NEMA PB 1.1 - Instructions for Safe Installation, Operation and Maintenance of Panelboards Rated 600 Volts or Less.

I. NEMA PB 1.2 - Application Guide for Ground-fault Protective Devices for Equipment.

1.05 SUBMITTALS

A. Submit shop drawings for equipment and component devices under provisions of Section 01300.

B. Include outline and support point dimensions, voltage, main bus ampacity, integrated short circuit ampere rating, circuit breaker and fusible switch arrangement and sizes.

1.06 SPARE PARTS

A. Keys: Furnish 2 each to Owner.

B. Fuses: Furnish to Owner 3 spare fuses of each type and rating installed.

C. Fuse Pullers: Furnish one fuse puller to Owner.

PART 2 - PRODUCTS

2.01 ACCEPTABLE MANUFACTURERS - PANELBOARDS

A. General Electric Company, Cutler Hammer, I T E or Square D Company

2.02 DISTRIBUTION PANELBOARDS

A. Panelboards: NEMA PB 1; circuit breaker type. fusible switch type.

B. Enclosure: NEMA PB 1; Type 1.

C. Provide cabinet front with concealed trim clamps and hinged door with flush lock. Finish in manufacturer's standard gray enamel.

D. Provide panelboards with aluminum bus, ratings as scheduled on Drawings. Provide ground bus in all panelboards.

E. Minimum Integrated Short Circuit Rating: 10,000 amperes rms symmetrical for 240 volt panelboards; 14,000 amperes rms symmetrical for 480 volt panelboards .

F. Fusible Switch Assemblies: NEMA KS 1; quick-make, quick-break, load interrupter enclosed knife switch with externally operable handle. Provide interlock to prevent opening front cover with switch in ON position. Handle lockable in OFF position. Fuse Clips: Designed to accommodate Class R fuses, type as specified.

G. Molded Case Circuit Breakers: NEMA AB 1; provide circuit breakers with integral thermal and instantaneous magnetic trip in each pole. Provide circuit breakers UL listed as Type HACR for air conditioning equipment branch circuits.

2.03 BRANCH CIRCUIT PANELBOARDS

A. Lighting and Appliance Branch Circuit Panelboards: NEMA PB1; circuit breaker type.

B. Enclosure: NEMA PB 1; Type 1.

C. Cabinet Size: 6 inches ; 20 inches wide for 240 volt and less panelboards,

D. Provide flush and surface cabinet front with concealed trim clamps, concealed hinge and flush lock all keyed alike. Finish in manufacturer's standard gray enamel.

E. Provide panelboards with aluminum bus, ratings as scheduled on Drawings. Provide ground bus in all panelboards.

F. Minimum Integrated Short Circuit Rating: 10,000 amperes rms symmetrical for 240 volt panelboards; 14,000 amperes rms symmetrical for 480 volt panelboards

G. Molded Case Circuit Breakers: NEMA AB 1; bolt-on type thermal magnetic trip circuit breakers, with common trip handle for all poles. Provide circuit breakers UL listed as Type SWD for lighting circuits. Provide UL Class A ground fault interrupter circuit breakers where scheduled.

PART 3 - EXECUTION

3.01 INSTALLATION

A. Install panelboards plumb and flush with wall finishes in conformance with NEMA PB 1.1.

B. Height: 6 ft .

C. Provide filler plates for unused spaces in panelboards.

D. Provide typed circuit directory for each branch circuit panelboard. Revise directory to reflect circuiting changes required to balance phase loads.

E. Stub 3 empty one inch conduits to accessible location above ceiling out of each recessed panelboard.

3.02 FIELD QUALITY CONTROL

A. Measure steady state load currents at each panelboard feeder. Should the difference at any panelboard between phases exceed 15 percent, rearrange circuits in the panelboard to balance the phase loads within 15 percent. Take care to maintain proper phasing for multi-wire branch circuits.

B. Visual and Mechanical Inspection: Inspect for physical damage, proper alignment, anchorage, and grounding. Check proper installation and tightness of connections for circuit breakers, fusible switches, and fuses.

END OF SECTION

G:\713050\Specs\newton so hs_complete spec.doc