Setti D. Warren
Mayor

City of Newton, Massachusetts

Department of Inspectional Services

1000 Commonwealth Avenue Newton, Massachusetts 02459

Telephone
(617) 796-1060
Telefax
(617) 796-1086
TDD/TTY
(617) 796-1089
www.newtonma.gov

John Lojek
Commissioner

FLOOR AREA RATIO WORKSHEET

For Residential Single and Two Family Structures

Property address: _____

FAR Calculations for Regulations Effective As Of October 15, 2011		
Inputs (square feet)		
	EXISTING	**PROPOSED**
1. First story		
2. Attached garage		
3. Second story		
4. Atria, open wells, and other vertical spaces (if not counted in first/second story)		
5. Certain floor area above the second story[1b]		
6. Enclosed porches[2b]		
7. Mass below first story[3b]		
8. Detached garage		
9. Area above detached garages with a ceiling height of 7' or greater		
10. Other detached accessory buildings (one detached building up to 120 sq. ft. is exempt)		
FAR of Proposed Structure(s)		
A. Total gross floor area (sum of rows 1-9 above)		
B. Lot size		
C. FAR = A/B		
Allowed FAR		
Allowable FAR		
Bonus of .02 if eligible[4b]		
TOTAL Allowed FAR		

Calculation Instructions

- **General:** Calculations should be made within the perimeter of outside walls of a building without deduction for hallways, stairs, closets, thickness of walls, columns, atria, open wells and other vertical open spaces or other features.
- **First/second story:** Exclude from the calculation bays or bay windows that are cantilevered do not have foundations, and that occupy 10 percent or less of the wall area on which they are mounted.
- **Atria:** Atria, open wells, and other vertical open spaces are calculated by multiplying the floor level area of such space by a factor equal to the average height in feet divided by 10.

Notes:

1b: Area above the second story: Include in the calculation for FAR any area that meets the following criteria:

- Lies below the area of a horizontal plane that is 5' above it and which touches the side walls and/or the underside of the roof rafters;
- Is at least 7' in any horizontal dimension as measured with in the area having a wall height of at least 5' or more;
- Has a minimum ceiling height of 7' on at least 50 percent of its required floor area; AND
- Has a floor area of not less than 70 sq. ft. as measured within the floor area having a wall height of 5' or more.

2b: Porch: A porch is considered enclosed if it is enclosed for any portion of the year by impermeable materials such as glass. Porches are roofed structures with sides not more than 60% enclosed by impermeable walls and railings or solid walls no higher than 36" high from the finished floor; are attached to and accessible from the primary structure; and are not heated or air conditioned.

3b: Mass below first story: Mass below first story includes any cellar, crawl space, basement, or other area lying directly below a first story. The portion that is included in FAR is the LESSER OF:

- 50% of the floor area of mass below first story OR
- X/Y x floor area of mass below first story,

Where:

X= Sum of the width of those sections of exposed walls below the first story having an exterior height equal to or greater than 4' as measured from existing or proposed grade, whichever is lower, to the top of the subfloor of the first story

Y= Perimeter of exterior walls below first story

4b: Bonus: An FAR bonus of .02 is available for those seeking to build on old lots (lots created before December 7, 1953) if new construction is built to comply with "new lot" setback standards and that nonconformities with respect to open space or lot coverage are not created or increased.

Residential Floor Area Ratio (FAR)

Newton's Zoning Ordinance sets out Floor Area Ratio limits for residential one and two family structures and describes what elements of a building are included in gross floor area. Floor area ratio, or FAR, regulates the amount of gross floor area that can be built on any given lot. FAR is the ratio of gross floor area of all buildings on a lot divided by lot size:

$$\text{FAR} = \frac{\text{gross floor area of all buildings on a lot}}{\text{Lot size}}$$

Definitions:

Carport: A one-story roofed structure permanently open on at least three sides and designed for or used for occupancy by a motor vehicle. For the purposes of this ordinance, a one-story port-cochere meets the definition of a carport.

Mass below first story: For the purposes of calculating gross floor area, any cellar, crawl space, basement, or other enclosed area lying directly below a first story in a residential structure.

Porch: A roofed projection that extends from the façade of a residential structure and that is neither heated nor air conditioned. A porch may share no more than two exterior walls with the residential structure. Railings or solid walls on the projecting facades of the porch may be no higher than 36" as measured from the finished porch floor; the remainder of these facades may be open to the elements or enclosed by mesh, glass, or similar material.

Porch, enclosed: A porch enclosed for any portion of the year by any non-permeable material such as glass or a similar material.

Porch, unenclosed: A porch that at all times is either enclosed by permeable materials such as mesh or similar material or is unenclosed by any material.

Floor area ratio:

(a) For residential structures in residential districts, gross floor area of all buildings on the lot divided by total lot area.

(b) For all others: Gross floor area of all buildings on the lot divided by total lot area. Any portion of a basement not used for storage, parking or building mechanicals shall be included in determining floor area ratio.

***Floor area, gross*:**

(a) For residential structures and buildings accessory to residential structures in residential districts, the sum of the floor area of all principal and accessory buildings whether or not habitable, except as excluded below. Floor area measurements shall be taken within the perimeter of the outside walls of each building without deduction for garage space, hallways, stairs, closets, thickness of walls, columns, atria, open wells and other vertical open spaces, or other features as defined in this section.

a. Gross floor area shall include:
   i. First and second stories;
   ii. Any space above the second story, whether finished or unfinished, that meets all of the following criteria:
      1. Lies within the area of a horizontal plane that is five (5) feet above the floor and which touches the side walls and/or the underside of the roof rafters;

2. Is at least seven (7) feet in any horizontal dimension, as measured within the area having a wall height of five feet or more;
3. Has a minimum ceiling height of seven (7) feet on at least 50 percent of its required floor area; and
4. Has a floor area of not less than 70 square feet as measured within the area having a wall height of five feet or more.

iii. Atria, open wells, and other vertical open spaces, where floor area shall be calculated by multiplying the floor level area of such space by a factor equal to the average height in feet divided by ten (10);

iv. Enclosed porches;

v. Attached garages;

vi. Detached garages and any space above the first story of a detached garage that has a ceiling height of 7' or greater;

vii. Other detached accessory buildings, such as sheds or cabanas, except as exempted in (b)(iii) below.

viii. A **portion** of mass below the first story, to be calculated as follows:

The lesser of 50% of the floor area of mass below first story OR the following: X/Y * floor area of mass below first story

Where:
X = Sum of the width of those sections of exposed walls below the first story having an exterior height equal to or greater than four (4) feet as measured from existing or proposed grade, whichever is lower, to the top of the subfloor of the first story
Y = Perimeter of exterior walls below first story

b. Gross floor area shall not include:
   i. Unenclosed porches;
   ii. Carports; and
   iii. One detached accessory building equal to or less than 120 square feet in size.

(b) For all others: The floor area within the perimeter of the outside walls of the building without deduction for hallways, stairs, closets, and thickness of walls, columns or other features.

30-15(u) The floor area ratio (FAR) shall apply to all one and two family structures, whether new or existing, according to the FAR limits contained in Table A below. The following exceptions shall apply:

1. For construction on lots created before 12/7/1953, an additional increase in FAR of .02 above the amount shown in Table A shall be allowed, provided that new construction proposed using additional FAR granted under this paragraph shall comply with setback requirements for post-1953 lots. Any increase in FAR granted through this section may not create or increase nonconformities with respect to lot coverage or open space and may not be used in conjunction with section 30-21(c).

2. An increased FAR may be allowed by special permit if the proposed structure is consistent with and not in derogation of the size, scale and design of other structures in the neighborhood.

TABLE A: ALTERNATIVE FAR FOR SINGLE AND TWO FAMILY STRUCTURES IN RESIDENTIAL DISTRICTS

Lot Size Category	**SR1**	**SR2**	**SR3**
Less than or equal to 4,999 square feet	Maximum FAR=.46	Maximum FAR=.46	Maximum FAR=.48
5,000 to 6,999 square feet	*Maximum FAR ranges from .46 to .43 depending on lot size.* Maximum FAR= .46 – [.000015* (lot size-5000)]	*Maximum FAR ranges from .46 to .43 depending on lot size.* Maximum FAR= .46 – [.000015* (lot size-5000)]	Maximum FAR=.48
7,000 to 9,999 square feet	*Maximum FAR ranges from .43 to .33 depending on lot size.* Maximum FAR = .43 – [.000033* (lotsize-7000)]	*Maximum FAR ranges from .43 to .38 depending on lot size.* Maximum FAR = .43 – [.000017* (lot size-7000)]	*Maximum FAR ranges from .48 to .41 depending on lot size.* Maximum FAR = .48 – [.000023* (lot size-7000)]
10,000 to 14,999 square feet	*Maximum FAR ranges from .33 to .31 depending on lot size.* Maximum FAR = .33 – [.000004* (lot size-10000)]	*Maximum FAR ranges from .38 to .33 depending on lot size.* Maximum FAR = .38 – [.000010* (lot size-10000)]	*Maximum FAR ranges from .41 to .38 depending on lot size.* Maximum FAR = .41 – [.000006* (lot size-10000)]
15,000 to 19,999 square feet	*Maximum FAR ranges from .31 to .28 depending on lot size.* Maximum FAR = .31 – [.000006* (lot size-15000)]	Maximum FAR = .33	Maximum FAR = .38
20,000 to 24,999 square feet	*Maximum FAR ranges from .28 to .26 depending on lot size.* Maximum FAR = .28 – [.000004* (lot size-20000)]	Maximum FAR = .33	*Maximum FAR ranges from .38 to .36 depending on lot size.* Maximum FAR = .38 – [.000004* (lot size-20000)]
25,000 square feet or more	Maximum FAR = .26	Maximum FAR = .33	Maximum FAR = .36

Lot Size Category	**MR1**	**MR2/MR3**
Less than or equal to 4,999 square feet	Maximum FAR = .58	Maximum FAR = .58
5,000 to 6,999 square feet	*Maximum FAR ranges from .58 to .53 depending on lot size.* Maximum FAR= .58 – [.000025* (lot size-5000)]	*Maximum FAR ranges from .58 to .53 depending on lot size.* Maximum FAR= .58 – [.000025* (lot size-5000)]
7,000 to 9,999 square feet	*Maximum FAR ranges from .53 to .48 depending on lot size.* Maximum FAR = .53 – [.000017* (lot size-7000)]	Maximum FAR = .53
10,000 to 14,999 square feet	Maximum FAR = .48	*Maximum FAR ranges from .53 to .43 depending on lot size.* Maximum FAR = .53 – [.000020* (lot size-10000)]
15,000 to 19,999 square feet	*Maximum FAR ranges from .48 to .43 depending on lot size.* Maximum FAR = .48 – [.000010* (lot size-15000)]	*Maximum FAR ranges from .43 to .38 depending on lot size.* Maximum FAR = .43 – [.000010* (lot size-15000)]
20,000 to 24,999 square feet	*Maximum FAR ranges from .43 to .38 depending on lot size.* Maximum FAR = .43 – [.000010* (lot size-20000)]	Maximum FAR = .38
25,000 square feet or more	Maximum FAR = .38	Maximum FAR = .38

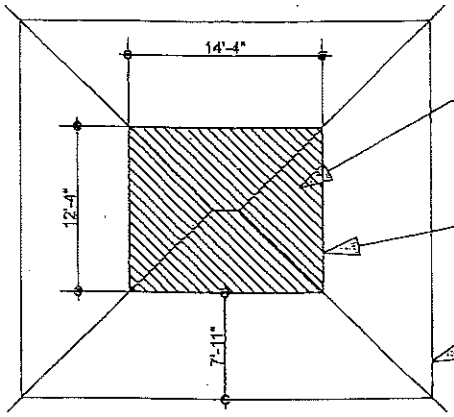

177 square feet of minimum ceiling height of 7'

Line of 7' height to underside of rafters

Outside face of wall

PLAN VIEW OF 1/2 STORY AREA 7' OR MORE

177 SF of 7' height/461 SF of required floor area = .38
7 FOOT HEIGHT IS 38% OF REQUIR ED FLOOR AREA.

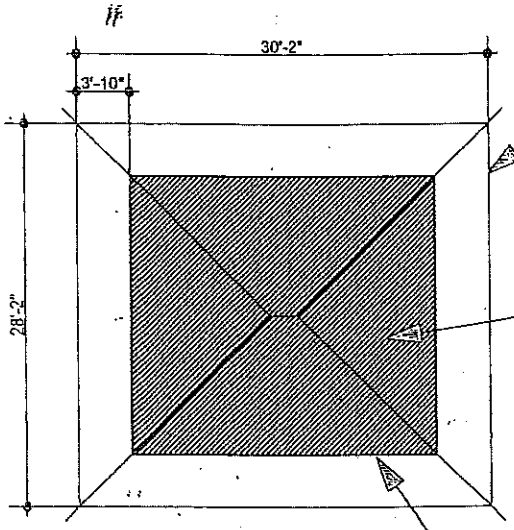

Outside face of wall

461 square feet "required floor area" lies below the area of a horizontal plane that is 5' above it which touches the side walls and/or the underside of the roof rafters

Line of 5' height to underside of rafters

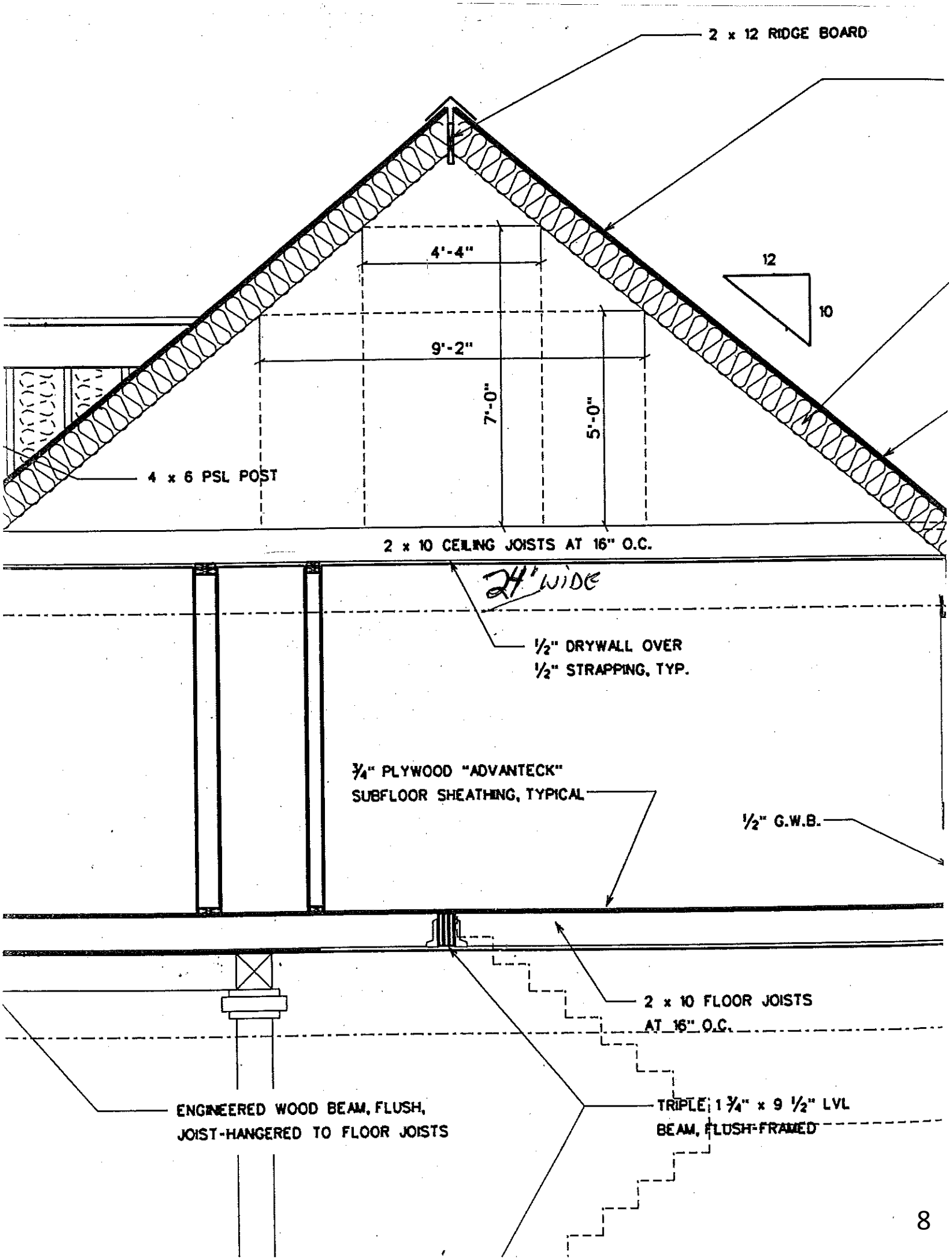
2 x 12 RIDGE BOARD
4'-4"
12
10
9'-2"
7'-0"
5'-0"
4 x 6 PSL POST
2 x 10 CEILING JOISTS AT 16" O.C.
24" WIDE
½" DRYWALL OVER
½" STRAPPING, TYP.
¾" PLYWOOD "ADVANTECK"
SUBFLOOR SHEATHING, TYPICAL
½" G.W.B.
2 x 10 FLOOR JOISTS
AT 16" O.C.
ENGINEERED WOOD BEAM, FLUSH,
JOIST-HANGERED TO FLOOR JOISTS
TRIPLE 1 ¾" x 9 ½" LVL
BEAM, FLUSH-FRAMED