Ruthanne Fuller
Mayor

City of Newton, Massachusetts
Department of Planning and Development
1000 Commonwealth Avenue Newton, Massachusetts 02459

Telephone
(617) 796-1120
Telefax
(617) 796-1142
TDD/TTY
(617) 796-1089
www.newtonma.gov

Barney S. Heath
Director

MEMORANDUM

DATE: September 11, 2020

TO: Councilor Deborah Crossley, Chair, Zoning & Planning Committee
Members of the Zoning & Planning Committee

FROM: Barney Heath, Director, Department of Planning and Development
Jennifer Caira, Deputy Director, Department of Planning and Development
Zachery LeMel, Chief of Long Range Planning
Cat Kemmett, Planning Associate

RE: **#88-20 Discussion and review relative to the draft Zoning Ordinance**
DIRECTOR OF PLANNING requesting review, discussion, and direction relative to the draft Zoning Ordinance.
Other docket items to be taken up within the context of Zoning Redesign include #30-20, #38-20, and #148-20

MEETING: September 14, 2020

CC: City Council
Planning Board
John Lojek, Commissioner of Inspectional Services
Neill Cronin, Chief of Current Planning
Alissa O. Giuliani, City Solicitor
Jonathan Yeo, Chief Operating Officer

At the August 13, 2020 ZAP meeting, the Planning Department introduced the revised draft of Article 3 – Residence Districts. Staff presented on the extensive amount of work taken up in Committee so far this term that led to the recommended changes in support of the City Council's goals and objectives. This meeting set up the Committee to now evaluate the ideas within the draft and understand impacts and outcomes in order to reach consensus on key policy decisions. The fall Committee calendar for this review, shared in the ZAP memo dated September 9th, 2020, will be discussed at this meeting.

The fall Committee calendar outlines three topic areas to be discussed at the upcoming ZAP meeting:

A. District Dimensional Standards (Sec. 3.1)

B. Building Type Dimensional Standards (Sec. 3.2)

C. Building Components – allowable increases (Sec. 3.3)

District Dimensional Standards (Sec. 3.1)

The proposed five residence zoning districts (R1, R2, R3, R4 and N) are the foundation for regulation across Newton's neighborhoods and roughly correspond to five of the existing residential districts (SR1, SR2, SR3, MR1 and MR2). District dimensional standards regulate the placement of structures on a lot. Utilizing data collected from the Pattern Book, these standards were derived from Newton's existing scale and proportions. Setting the standards in this way helps ensure any future development or redevelopment relates to Newton's existing character.

In addition, the recommended standards help to facilitate desirable development patterns for Newton's future based on the City Council's other goals and objectives. This can be understood when all the district standards are viewed together as a transect that moves from larger lots/less lot coverage/larger setbacks (R1, R2, and R3) to smaller lots/more lot coverage/smaller setbacks (R4 and N). This typically corresponds with Newton's existing residential development patterns, but not always.

The standards to be reviewed at this ZAP meeting include Lot Frontage (see Table 1), Lot Coverage (see Table 2), Front Setback (see Table 3), Side Setback (see Table 4), and Rear Setback (see Table 5). What these tables reveal is that current ordinance standards (old lot or new lot) often have very little relationship to what exists on the ground. Therefore, it is not surprising that new development is regularly criticized as out of scale and proportion to the surrounding neighborhood. As mentioned above the proposed recommendation for each standard, within the August 2020 draft, attempts to strike the right balance between adhering to existing scale and proportion and allowing for an increase in diverse housing opportunities that are more economically and environmentally sustainable.

At this meeting, staff hope that the Committee members can discuss, and come to a consensus, on what priorities should inform each of these standards since these standards will determine the outcome, and overall impact, of any future residential development or redevelopment. Setting these priorities will inform staff that either the standards within the draft are correct or require minor adjustments.

Building Type Dimensional Standards (Sec. 3.2)

The proposed Zoning Ordinance uses Building Types as a tool to regulate the scale and proportion of development within each zoning district by setting standards for the mass and volume of a building (footprint, # of stories, story height). The Building Type dimensional standards, like the district dimensional standards described above, derive from Newton's existing building stock (House A through Duplex) or design best practices (Triplex through Small Multi-Use Building). So, setting the appropriate dimensional standards is critical for not only ensuring new development relates to Newton's existing building stock, but also facilitates additional building forms, suitably located, to achieve the City Council's goals. If set and mapped correctly, then staff recommend allowing these Building Types by-right to achieve another stated objective, to simplify and streamline the permitting and review process.

In this way, Building Types allow the City to directly regulate one of the top desires heard throughout the Zoning Redesign process, that the proposed Zoning Ordinance better regulate building size and placement on the lot. The current Zoning Ordinance applies generic dimensional standards to all buildings through FAR. The recommended Building Types in the proposed draft allow for multiple dimensional standards that differ from one Building Type to another within the same Residence District. This allows those making alterations to existing structures to better respond to the variety of buildings found throughout Newton and ensures any new construction appropriately aligns in scale and proportion to buildings nearby.

The main standard to be reviewed at this ZAP meeting for Building Types is footprint (see Table 6). This table shows that the standards for the maximum proposed footprint for each Building Type is set roughly at the median of Newton's existing buildings. This standard helps ensure that new structures comfortably fit into the established neighborhood patterns, while also not allowing the uppermost limits that exist in the city today.

The limitations set in the Building Type standards break the link between building size and lot size, replacing it with design focused standards derived from the existing built fabric in Newton. Breaking this link helps ensure buildings within a district are of a similar scale, regardless of lot sizes or configurations, while still maintaining controls on the overall size and ensuring proper distance between buildings through the district standards. Building Types do not regulate style, only volume, which can better respond to the diversity of housing forms in the city. Finally, allowing for a range of housing types and densities can facilitate an increase in availability in the marketplace for various income levels and household sizes.

It should be noted that the draft ordinance does not institute a required minimum lot size. Rather, using the Building Type and district dimensional standards we have calculated the minimum lot size required to build the maximum Building Type (see Table 7). This means that the minimum lot size required to build each building type is not a "one size fits all" number, but rather depends on which district the structure lies in. For example, a House C built to the maximum footprint in a the R1 district requires a minimum lot size of 7,600 square feet, in order to meet the district setback and lot coverage standards. But a House C in the N district requires a lot size of only 2,520 square feet. This system allows for a variety of housing forms to be permitted in each district, while also fostering the transect pattern of growth that moves from larger lots and less lot coverage in areas further from village centers to areas with an established pattern of smaller lots with more lot coverage.

Eliminating minimum lot sizes can encourage smaller homes to be built on these smaller lots, which can help achieve the City's goal of creating housing options at different sizes and price points. As an example, these smaller homes may appeal to Newton's aging population looking to downsize and remain in Newton, young families looking for a starter home, or individuals living alone, which is increasingly common in the United States.

At this meeting, staff hope that the Committee members can discuss, how setting the Building Type standards around the median facilitates the desired outcomes laid out by the City Council. Staff have understood these outcomes to include ensuring new development fits within scale and proportion of its surroundings and limiting building size to promote environmental sustainability and economic diversity.

Building Components – allowable increases (Sec. 3.3)

Like Building Types, Building Components allow for a greater ease of use and level of controlled flexibility when it comes to new development and redevelopment of existing residences. Through the Building Components standards, common home improvements such as dormers, bay windows, rear additions, porches, and other alterations to the main structure would be allowed by-right. It should be noted that to take advantage of any Building Component by-right, the proposal must meet all the specific standards of that component and all district dimensional requirements.

Using the same data of existing Building Type footprints, staff have recommended limited increases to the overall footprint through Building Components (see Table 8). This table shows that through Building Components, structures can increase their size through this bonus while remaining in scale and

proportion with existing neighborhood conditions. For House A through Duplex the proposed draft allows for maximum increase of 25%. In this way, Building Components allow for modest increases in size that fit with what we see in the city today except for the uppermost limits of very large homes in each Building Type.

Using the tables provided in this memo, staff hope that the Committee members can discuss, and come to a consensus, on the allowable increase by Building Components. The discussion will be predicated on the Building Type standards since the allowable increase is based on these numbers.

Looking Ahead

At the upcoming ZAP meeting, scheduled for October 1st, staff hope to facilitate a discussion on the proposed Parking Requirements (Sec. 3.7), Garage Design Standards (Sec. 3.4), and Driveway Access (Sec. 3.7.1.E). In addition to Councilor questions and comments, staff will seek guidance on questions within in the Decision Tree memo, dated August 11, 2020.

Attachments

Attachment A Zoning Diagrams for

Table 1: Lot Frontage (Existing Conditions, Current Standards, and Proposed Standards)

Proposed Districts	**The Real World Deciles** *We'd have X% conforming if the minimum was set at __*	**Current Ordinance** *Lot Frontage min*	**Proposal (August 2020)** *Lot Frontage min & max*
R1	10% conforming - 164 ft 20% conforming - 140 ft 30% conforming - 126 ft 40% conforming - 116 ft 50% conforming - 108 ft 60% conforming - 101 ft 70% conforming - 98 ft 80% conforming - 89 ft 90% conforming - 76 ft	SR1 old = 100 ft SR1 new = 140 ft	80 ft min frontage
R2	10% conforming - 110 ft 20% conforming - 99 ft 30% conforming - 90 ft 40% conforming - 83 ft 50% conforming - 79 ft 60% conforming - 74 ft 70% conforming - 70 ft 80% conforming - 62 ft 90% conforming - 53 ft	SR2 old = 80 ft SR2 new = 100 ft SR3 old = 70 ft SR3 new = 80 ft	60 ft min frontage 110 ft max frontage
R3	10% conforming - 102 ft 20% conforming - 89 ft 30% conforming - 80 ft 40% conforming - 73 ft 50% conforming - 67 ft 60% conforming - 61 ft 70% conforming - 56 ft 80% conforming - 50 ft 90% conforming - 45 ft	MR1 old = 70 ft MR1 new = 80 ft MR2 old = 70 ft MR2 new = 80 ft	50 ft min frontage 100 ft max frontage
R4	10% conforming - 102 ft 20% conforming - 88 ft 30% conforming - 77 ft 40% conforming - 69 ft 50% conforming - 63 ft 60% conforming - 59 ft 70% conforming - 54 ft 80% conforming - 48 ft 90% conforming - 36 ft	MR1 old = 70 ft MR1 new = 80 ft MR2 old = 70 ft MR2 new = 80 ft	50 ft min frontage 100 ft max frontage
N	10% conforming - 165 ft 20% conforming - 124 ft 30% conforming - 100 ft 40% conforming - 88 ft 50% conforming - 77 ft 60% conforming - 68 ft 70% conforming - 61 ft 80% conforming - 51 ft 90% conforming - 36 ft	MR2 old = 70 ft MR2 new = 80 ft BU2 = no min.	40 ft min frontage 100 ft max frontage

Table 2: Lot Coverage (Existing Conditions, Current Standards, and Proposed Standards)

Proposed Districts	**The Real World Deciles** *We'd have X% conforming if the maximum was set at __ (percentile includes all impervious surface on a lot)*	**Current Ordinance Rules** *Lot Coverage max (closest translation in current ordinance is the inverse of "useable open space")*	**Proposal (August 2020)** *Lot Coverage max (recommendation is to include all structures and paved areas for driveways and parking)*
R1	10% conforming - 8% 20% conforming - 12% 30% conforming - 15% 40% conforming - 18% 50% conforming - 21% 60% conforming - 24% 70% conforming - 27% 80% conforming - 32% 90% conforming - 39%	SR1 old = 35% SR1 new = 30% **Inverse % of useable open space*	25% max. lot coverage
R2	10% conforming - 12% 20% conforming - 17% 30% conforming - 21% 40% conforming - 24% 50% conforming - 27% 60% conforming - 31% 70% conforming - 35% 80% conforming - 41% 90% conforming - 49%	SR2 old = 50% SR2 new = 35% SR3 old = 50% SR3 new = 50% **Inverse % of useable open space*	30% max. lot coverage
R3	10% conforming - 18% 20% conforming - 25% 30% conforming - 31% 40% conforming - 36% 50% conforming - 41% 60% conforming - 47% 70% conforming - 53% 80% conforming - 61% 90% conforming - 72%	MR1 old = 50% MR1 new = 50% MR2 old = 50% MR2 new = 50% **Inverse % of useable open space*	50% max. lot coverage
R4	10% conforming - 23% 20% conforming - 30% 30% conforming - 35% 40% conforming - 41% 50% conforming - 47% 60% conforming - 52% 70% conforming - 58% 80% conforming - 67% 90% conforming - 78%	MR1 old = 50% MR1 new = 50% MR2 old = 50% MR2 new = 50% **Inverse % of useable open space*	60% max. lot coverage
N	10% conforming - 27% 20% conforming - 40% 30% conforming - 52% 40% conforming - 60% 50% conforming - 68% 60% conforming - 76% 70% conforming - 84% 80% conforming - 91% 90% conforming - 98%	MR2 old = 50% MR2 new = 50% BU2 = no max. **Inverse % of useable open space*	70% lot coverage

Table 3: Front Setback (Existing Conditions, Current Standards, and Proposed Standards)

Proposed Districts	**The Real World Deciles** *We'd have X% conforming if the minimum was set at __*	**Current Ordinance** Front Setback min	**Proposal (August 2020)** *Front Setback min & max*
R1	10% conforming - 65 ft 20% conforming - 50 ft 30% conforming - 43 ft 40% conforming - 40 ft 50% conforming - 36 ft 60% conforming - 33 ft 70% conforming - 30 ft 80% conforming - 28 ft 90% conforming - 23 ft	SR1 old = 25 ft SR1 new = 40 ft	25 ft min front setback
R2	10% conforming - 40 ft 20% conforming - 34 ft 30% conforming - 31 ft 40% conforming - 29 ft 50% conforming - 27 ft 60% conforming - 26 ft 70% conforming - 24 ft 80% conforming - 21 ft 90% conforming - 15 ft	SR2 old = 25 ft SR2 new = 30 ft SR3 old = 25 ft SR3 new = 30 ft	20 ft min front setback 40 ft max front setback
R3	10% conforming - 38 ft 20% conforming - 31 ft 30% conforming - 28 ft 40% conforming - 25 ft 50% conforming - 22 ft 60% conforming - 19 ft 70% conforming - 16 ft 80% conforming - 13 ft 90% conforming - 8 ft	MR1 old = 30 ft MR1 new = 25 ft MR2 old = 25 ft MR2 new = 25 ft	10 ft min. front setback 35 ft max front setback
R4	10% conforming - 34 ft 20% conforming - 29 ft 30% conforming - 24 ft 40% conforming - 22 ft 50% conforming - 18 ft 60% conforming - 16 ft 70% conforming - 13 ft 80% conforming - 9 ft 90% conforming - 5 ft	MR1 old = 30 ft MR1 new = 25 ft MR2 old = 25 ft MR2 new = 25 ft	5 ft min front setback 35 ft max front setback
N	10% conforming - 40 ft 20% conforming - 29 ft 30% conforming - 23 ft 40% conforming - 19 ft 50% conforming - 15 ft 60% conforming - 12 ft 70% conforming - 8 ft 80% conforming - 3 ft 90% conforming - 0 ft	MR2 old = 25 ft MR2 new = 25 ft BU2 = Lesser of ½ bldg. height or average neighboring lots	0 ft min front setback 25 ft max front setback

Table 4: Side Setback (Existing Conditions, Current Standards, and Proposed Standards)

Proposed Districts	**The Real World Deciles** *We'd have X% conforming if the minimum was set at __*	**Current Ordinance Rules** *Side Setback min*	**Proposal (August 2020)** *Side Setback min & max*
R1	10% conforming - 33 ft 20% conforming - 24 ft 30% conforming - 20 ft 40% conforming - 17 ft 50% conforming - 15 ft 60% conforming - 13 ft 70% conforming - 11 ft 80% conforming - 8 ft 90% conforming - 5 ft	SR1 old = 12.5 ft SR1 new = 20 ft	20 ft min side setback
R2	10% conforming - 19 ft 20% conforming - 15 ft 30% conforming - 12 ft 40% conforming - 11 ft 50% conforming - 9 ft 60% conforming - 8 ft 70% conforming - 7 ft 80% conforming - 6 ft 90% conforming - 4 ft	SR2 old = 7.5 ft SR2 new = 15 ft SR3 old = 7.5 ft SR3 new = 10 ft	12.5 ft min side setback
R3	10% conforming - 18 ft 20% conforming - 13 ft 30% conforming - 11 ft 40% conforming - 9 ft 50% conforming - 8 ft 60% conforming - 7 ft 70% conforming - 5 ft 80% conforming - 4 ft 90% conforming - 1 ft	MR1 old = 7.5 MR1 new = 10 ft MR2 old = 7.5 MR2 new = 10 ft	10 ft min side setback
R4	10% conforming - 17 ft 20% conforming - 13 ft 30% conforming - 11 ft 40% conforming - 9 ft 50% conforming - 8 ft 60% conforming - 6 ft 70% conforming - 4 ft 80% conforming - 3 ft 90% conforming - 0 ft	MR1 old = 7.5 MR1 new = 10 ft MR2 old = 7.5 MR2 new = 10 ft	10 ft mi. side setback
N	10% conforming - 23 ft 20% conforming - 15 ft 30% conforming - 11 ft 40% conforming - 8 ft 50% conforming - 6 ft 60% conforming - 4 ft 70% conforming - 2 ft 80% conforming - 0 ft 90% conforming – 0 ft	MR2 old = 7.5 ft MR2 new = 10 ft BU2 = ½ bldg. height or equal to abutting side yard setback; if abutting residential, greater of ½ bldg. height or 15 ft	7.5 ft min side setback

Table 5: Rear Setback (Existing Conditions, Current Standards, and Proposed Standards)

Proposed Districts	**The Real World Deciles** *We'd have X% conforming if the minimum was set at __*	**Current Ordinance Rules** Rear Setback min	**Proposal (August 2020)** *Rear Setback min*
R1	10% conforming - 94 ft 20% conforming - 75 ft 30% conforming - 63 ft 40% conforming - 53 ft 50% conforming - 44 ft 60% conforming - 34 ft 70% conforming - 24 ft 80% conforming - 6 ft 90% conforming - 0 ft	SR1 old = 25 ft SR1 new = 25 ft	40 ft min. rear setback
R2	10% conforming - 74 ft 20% conforming - 57 ft 30% conforming - 47 ft 40% conforming - 40 ft 50% conforming - 34 ft 60% conforming - 28 ft 70% conforming - 20 ft 80% conforming - 10 ft 90% conforming - 0 ft	R2 old = 15 ft SR2 new = 15 ft SR3 old = 15 ft SR3 new = 15 ft	30 ft min. rear setback
R3	10% conforming - 68 ft 20% conforming - 50 ft 30% conforming - 40 ft 40% conforming - 33 ft 50% conforming - 26 ft 60% conforming - 19 ft 70% conforming - 12 ft 80% conforming - 4 ft 90% conforming - 0 ft	MR1 old = 15 ft MR1 new = 15 ft MR2 old = 15 ft MR2 new = 15 ft	20 ft min. rear setback
R4	10% conforming - 65 ft 20% conforming - 49 ft 30% conforming - 39 ft 40% conforming - 31 ft 50% conforming - 25 ft 60% conforming - 19 ft 70% conforming - 12 ft 80% conforming - 5 ft 90% conforming - 0 ft	MR1 old = 15 ft MR1 new = 15 ft MR2 old = 15 ft MR2 new = 15 ft	20 ft min. rear setback
N	10% conforming - 75 ft 20% conforming - 54 ft 30% conforming - 42 ft 40% conforming - 33 ft 50% conforming - 23 ft 60% conforming - 17 ft 70% conforming - 11 ft 80% conforming - 4 ft 90% conforming - 0 ft	MR2 old = 15 ft MR2 new = 15 ft BU2 = 0 ft or abutting residential/ public use district (greater of ½ bldg. height or 15')	15 ft min. rear setback

Table 6: Building Type Footprint (Existing Conditions and Proposed Standards)

Proposed Building Types	**The Real World Deciles** *We'd have X% conforming if the maximum was set at __*	**Existing Median Footprint** *Lot Coverage max (closest translation to current ordinance is the inverse of "useable open space")*	**Proposal (August 2020)** *Footprint includes attached enclosed spaces for habitation or storage*
House A	10% conforming – 1,822 sf 20% conforming – 2,026 sf 30% conforming – 2,212 sf 40% conforming – 2,300 sf 50% conforming – 2,407 sf 60% conforming – 2,543 sf 70% conforming – 2,713 sf 80% conforming – 3,005 sf 90% conforming – 3,476 sf	2,407 sf	2,400 sf
House B	10% conforming – 954 sf 20% conforming – 1,085 sf 30% conforming – 1,184 sf 40% conforming – 1,277 sf 50% conforming – 1,371 sf 60% conforming – 1,469 sf 70% conforming – 1,579 sf 80% conforming – 1,725 sf 90% conforming – 1,914 sf	1,371 sf	1,400 sf
House C	10% conforming – 962 sf 20% conforming – 1,100 sf 30% conforming – 1,209 sf 40% conforming – 1,287 sf 50% conforming – 1,351 sf 60% conforming – 1,452 sf 70% conforming – 1,534 sf 80% conforming – 1,620 sf 90% conforming – 1,707 sf	1,351 sf	1,200 sf
House D	10% conforming – 1,876 sf 20% conforming – 1,975 sf 30% conforming – 2,086 sf 40% conforming – 2,201 sf 50% conforming – 2,317 sf 60% conforming – 2,458 sf 70% conforming – 2,639 sf 80% conforming – 2,825 sf 90% conforming – 3,143 sf	2,314 sf	2,300 sf
Duplex	10% conforming – 1,215 sf 20% conforming – 1,379 sf 30% conforming – 1,492 sf 40% conforming – 1,580 sf 50% conforming – 1,671 sf 60% conforming – 1,763 sf 70% conforming – 1,873 sf 80% conforming – 2,028 sf 90% conforming – 2,286 sf	1,671 sf	1,800 sf

Table 7: Minimum Lot Size (Existing Conditions, Current Standards, and Min Lot for Max Building Type)

Proposed Districts	**The Real World Deciles** *We'd have X% conforming if the maximum was set at __*	**Current Ordinance Rules** *Lot Size min*	**Proposed Adjustments** *Max Building Type – Min Lot Size*
R1	10% conforming - 32,241 sf 20% conforming - 24,989 sf 30% conforming - 20,435 sf 40% conforming - 17,384 sf 50% conforming - 15,763 sf 60% conforming - 14,935 sf 70% conforming - 13,276 sf 80% conforming - 11,751 sf 90% conforming - 10,021 sf	SR1 old: 15,000 sf SR1 new: 25,000 sf	House A – 10,000 sf House B – 8,000 sf House C – 7,600 sf House D – 9,800 sf
R2	10% conforming - 15,030 sf 20% conforming - 12,277 sf 30% conforming - 10,842 sf 40% conforming - 10,013 sf 50% conforming - 9,086 sf 60% conforming - 8,157 sf 70% conforming - 7,448 sf 80% conforming - 6,760 sf 90% conforming - 5,562 sf	SR2 old: 10,000 sf SR2 new: 15,000 sf SR3 old: 7,000 sf SR3 new: 10,000 sf	House B – 5,400 sf House C – 5,040 sf
R3	10% conforming - 13,640 sf 20% conforming - 10,701 sf 30% conforming - 9,331 sf 40% conforming - 8,147 sf 50% conforming - 7,260 sf 60% conforming - 6,551 sf 70% conforming - 5,777 sf 80% conforming - 5,022 sf 90% conforming - 3,978 sf	MR1 old: 7,000 sf MR1 new: 10,000sf MR2 old: 7,000 sf MR2 new: 10,000sf	House B – 3,833 sf House C – 3,500 sf Duplex – 4,500 sf
R4	10% conforming - 13,095 sf 20% conforming - 10,328 sf 30% conforming - 9,131 sf 40% conforming – 7,800 sf 50% conforming – 6,840 sf 60% conforming - 6,018 sf 70% conforming – 5,456 sf 80% conforming – 4,516 sf 90% conforming - 3,130 sf	MR1 old: 7,000 sf MR1 new: 10,000sf MR2 old: 7,000 sf MR2 new: 10,000sf	House B – 3,583 sf House C – 3,250 sf Duplex – 4,250 sf Triplex – 4,250 sf
N	10% conforming - 30,690 sf 20% conforming - 17,105 sf 30% conforming - 12,672 sf 40% conforming - 10,083 sf 50% conforming - 8,514 sf 60% conforming - 7,229 sf 70% conforming - 6,351 sf 80% conforming - 4,913 sf 90% conforming - 3,624 sf	MR3 old:7,000 sf MR3 new: 10,000sf BU2: 10,000 sf	House B – 2,840 sf House C – 2,520 sf Duplex – 3,480 sf Triplex – 3,480 sf Townhouse Section* - 4,875 sf Multiplex – 5,675 sf *Calculated for two Townhouse Sections

Table 8: Building Components - % Bonus (Existing Conditions, % Allowance, Proposed Max Footprint)

Proposed Building Types	**The Real World Deciles** *Existing building footprints (inclusive of building components)*	**% Allowed increase in Footprint** *Increase allowed beyond max building footprint (must comply with district dimensional standards)*	**Proposal (August 2020)** *Max building footprint + max building component allowance*
House A	10% conforming – 1,822 sf 20% conforming – 2,026 sf 30% conforming – 2,212 sf 40% conforming – 2,300 sf 50% conforming – 2,407 sf 60% conforming – 2,543 sf 70% conforming – 2,713 sf 80% conforming – 3,005 sf 90% conforming – 3,476 sf	600 sf *25% increase*	3,000 sf *~80th percentile*
House B	10% conforming – 954 sf 20% conforming – 1,085 sf 30% conforming – 1,184 sf 40% conforming – 1,277 sf 50% conforming – 1,371 sf 60% conforming – 1,469 sf 70% conforming – 1,579 sf 80% conforming – 1,725 sf 90% conforming – 1,914 sf	350 sf *25% increase*	1,750 sf *~80th percentile*
House C	10% conforming – 962 sf 20% conforming – 1,100 sf 30% conforming – 1,209 sf 40% conforming – 1,287 sf 50% conforming – 1,351 sf 60% conforming – 1,452 sf 70% conforming – 1,534 sf 80% conforming – 1,620 sf 90% conforming – 1,707 sf	300 sf *25% increase*	1,500 sf *~70th percentile*
House D	10% conforming – 1,876 sf 20% conforming – 1,975 sf 30% conforming – 2,086 sf 40% conforming – 2,201 sf 50% conforming – 2,317 sf 60% conforming – 2,458 sf 70% conforming – 2,639 sf 80% conforming – 2,825 sf 90% conforming – 3,143 sf	575 sf *25% increase*	2,875 sf ~80th percentile
Duplex	10% conforming – 1,215 sf 20% conforming – 1,379 sf 30% conforming – 1,492 sf 40% conforming – 1,580 sf 50% conforming – 1,671 sf 60% conforming – 1,763 sf 70% conforming – 1,873 sf 80% conforming – 2,028 sf 90% conforming – 2,286 sf	450 sf *25% increase*	2,250 sf ~90th percentile

3.1.2. Residence 1 District (R1)

The Residence 1 District is composed of neighborhoods characterized typically by larger homes on larger parcels of land. These neighborhoods consist almost entirely of single-unit residences with significant areas of landscaping and trees. Where other uses exist or may be proposed, the City would like to preserve the existing building stock by allowing for existing buildings to be renovated or converted to multiple dwelling units or to a civic institution.

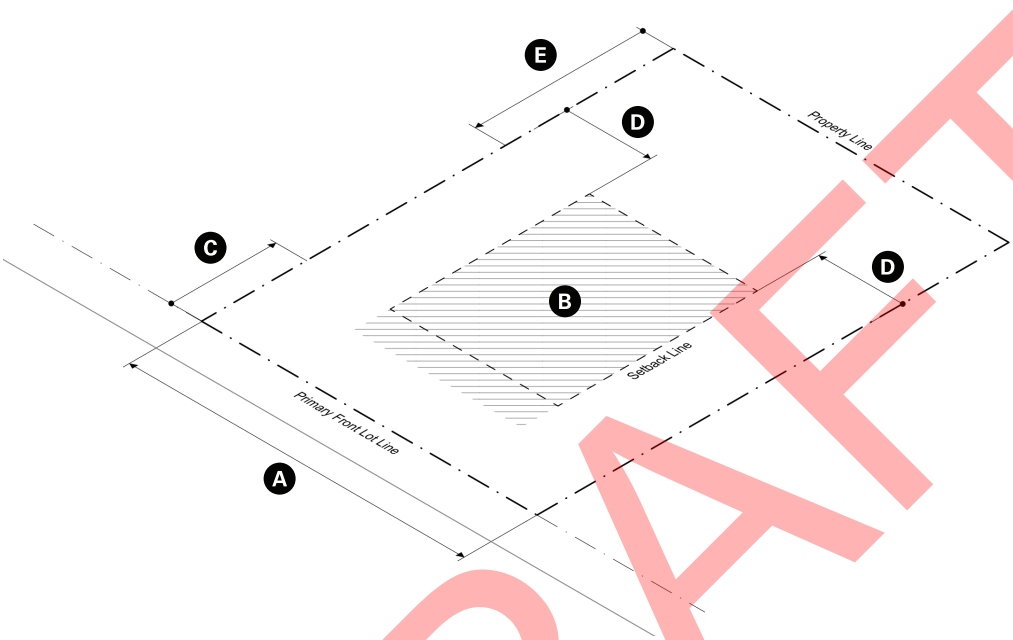

Lot Characteristics	min	max
A Frontage	80 ft	--
B Lot Coverage	--	25% 35% by special permit
Setbacks	**min**	**max**
C Front	25 ft	--
D Side	20 ft	--
E Rear	40 ft	--

DRAFT

3.1.3. Residence 2 District (R2)

The Residence 2 District contains quintessentially suburban neighborhoods with ample lawns and mostly single-unit residences, developed primarily in the 20th Century in areas between Newton's villages. Many of these neighborhoods are remote from the walkable village centers of the City and therefore do not have nearby gathering places, shops, or services.

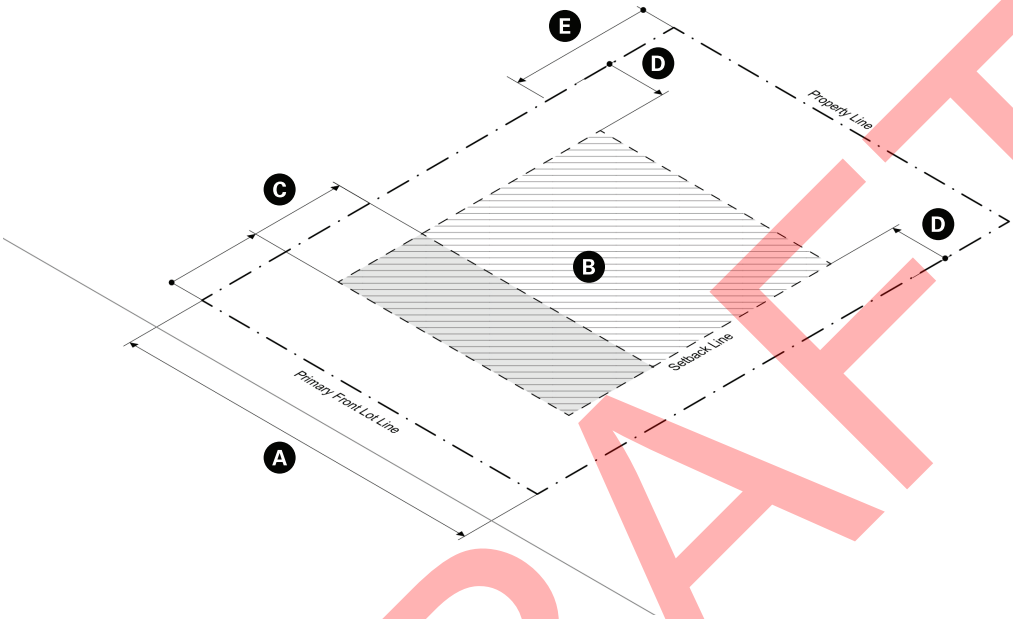

Lot Characteristics	min	max
A Frontage	60 ft	110 ft
B Lot Coverage	--	30% 40% by special permit
Setbacks	**min**	**max**
C Front	20 ft	40 ft
D Side	12.5 ft	--
E Rear	30 ft	--

DRAFT

3.1.4. Residence 3 District (R3)

The Residence 3 District includes neighborhoods composed of single, two, and three-unit homes, frequently within walking distance to transit and activity centers. The intent of this district is to increase predictability for homeowners in how they may modify their homes and integrate appropriately scaled new homes into the fabric of the neighborhoods that make up this district.

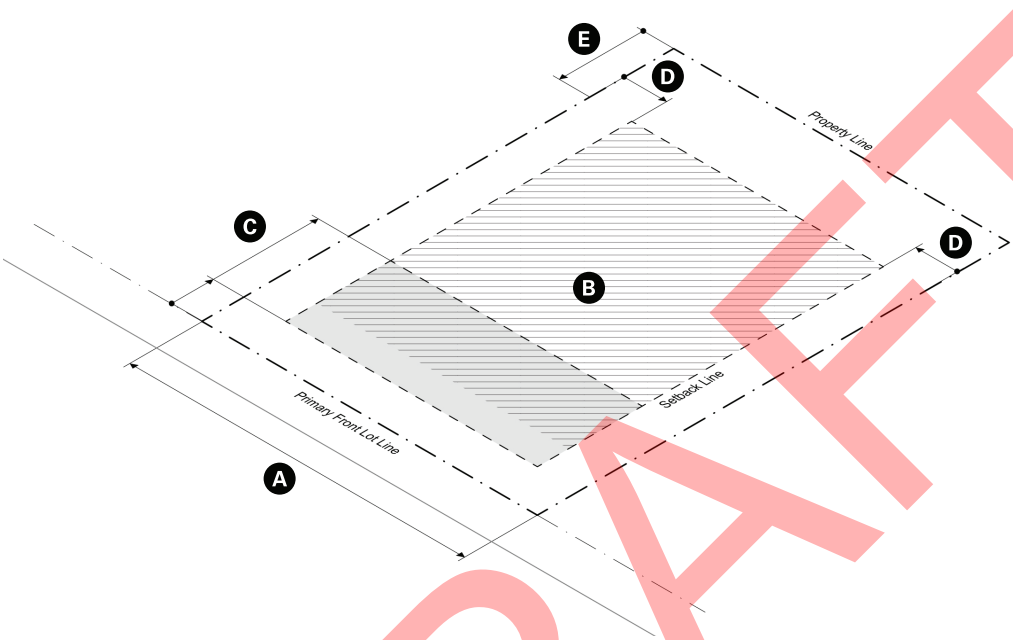

Lot Characteristics	min	max
A Frontage	50 ft	100 ft
B Lot Coverage	--	50% 60% by special permit
Setbacks	**min**	**max**
C Front	10 ft	35 ft
D Side	10 ft	--
E Rear	20 ft	--

DRAFT

3.1.5. Residence 4 District (R4)

The Residence 4 District includes neighborhoods composed mostly of multi-unit buildings, with single-unit residences as well, frequently within walking distance to transit and activity centers.

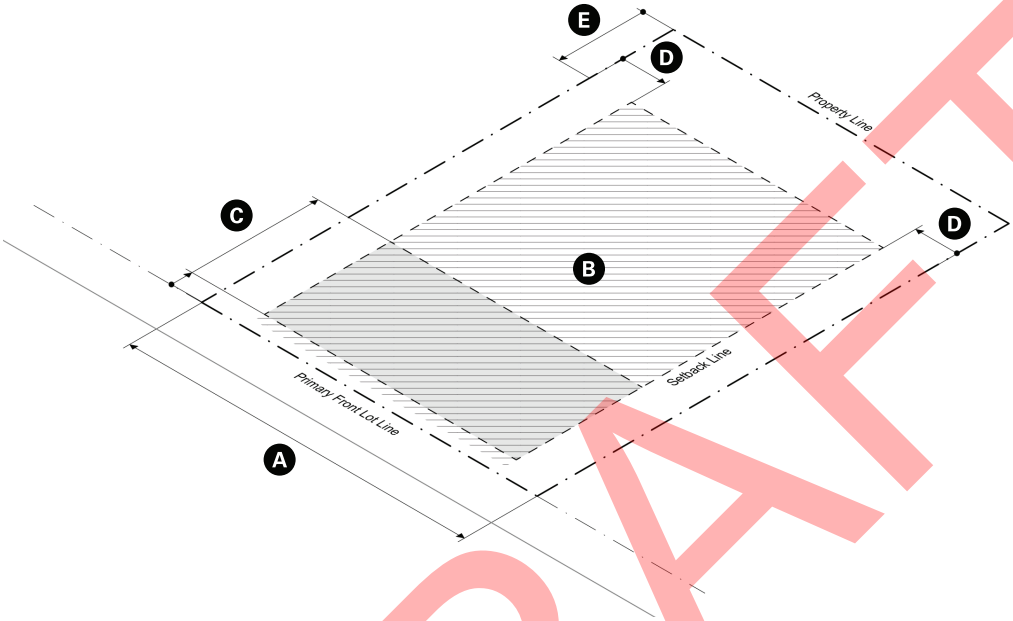

Lot Characteristics	min	max
A Frontage	50 ft	100 ft
B Lot Coverage	--	60% 70% by special permit
Setbacks	**min**	**max**
C Front	5 ft	35 ft
D Side	10 ft	--
E Rear	20 ft	--

DRAFT

3.1.6. Neighborhood General District (N)

Within a short walk of the amenities, mixture of uses, and transit options found in Newton's village centers, the Neighborhood General District serves as a transition from the village centers to the adjoining neighborhoods. With easy access to the above amenities, these areas are appropriate for a wider range of housing types, including small multi-unit residential buildings and townhouses, as well as a range of small-scale neighborhood-serving commercial spaces.

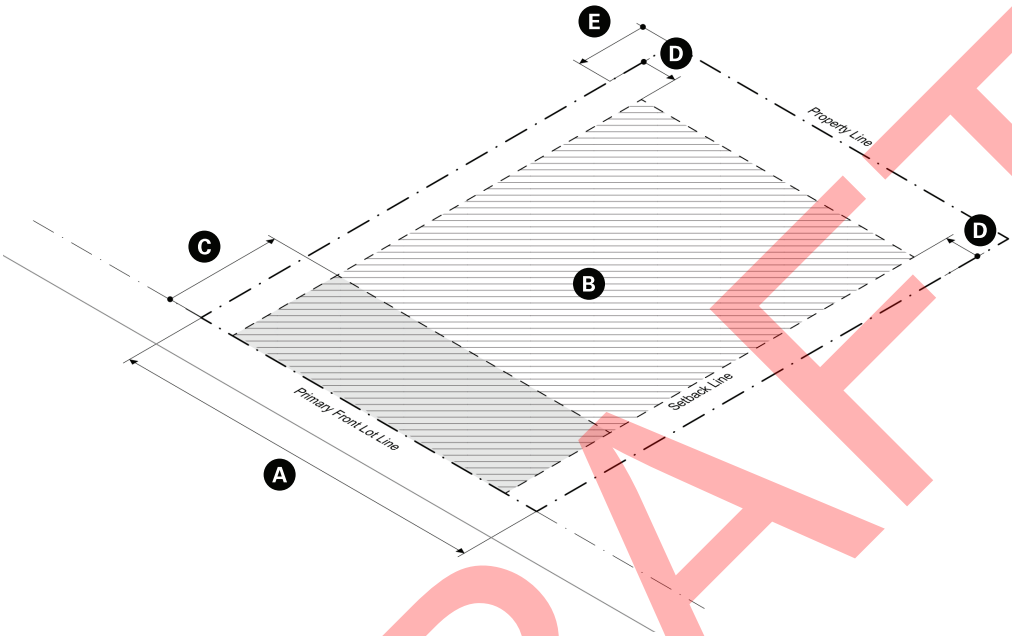

Lot Characteristics	min	max
A Frontage	40 ft	100 ft
B Lot Coverage	--	70% 80% by special permit
Setbacks	**min**	**max**
C Front	0 ft	25 ft
D Side	7.5 ft	--
E Rear	15 ft	--

DRAFT

3.2.4. House A

A house with a large footprint and up to 2.5 stories. House A building types are common in several Newton neighborhoods like Chestnut Hill, Waban, and West Newton Hill. House A types may have been built in several eras of Newton's development history from the era when Newton was a destination for country estates to the modern development period of the 1980s to the present.

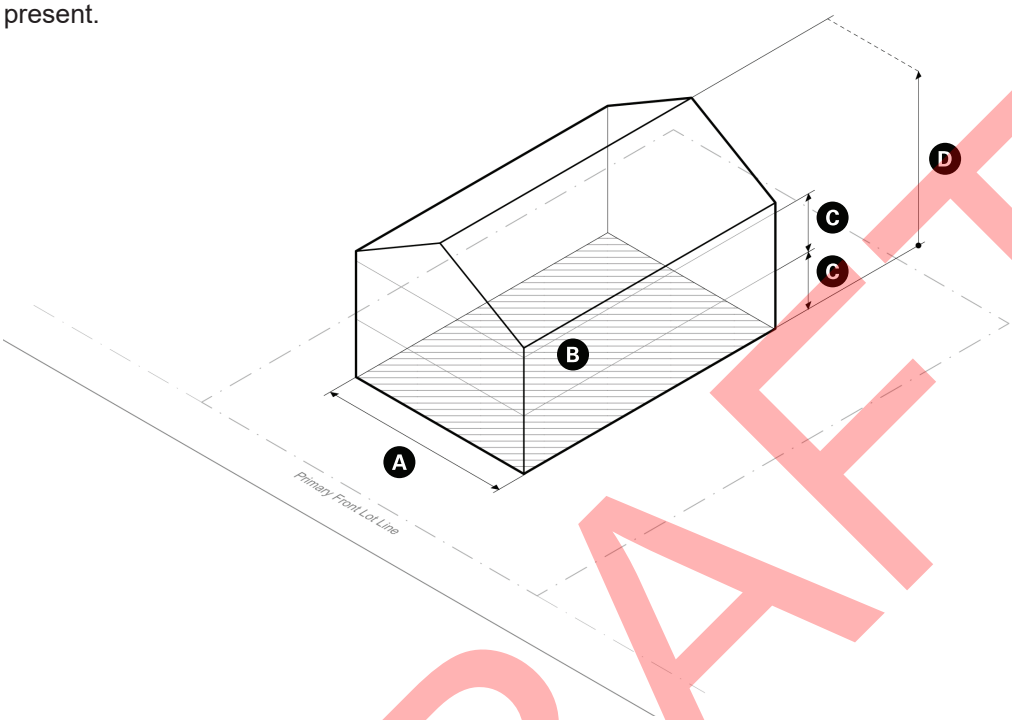

Building Dimensions	min	max
A Front Elevation Width R1	none	--
B Building Footprint	--	2,400 sf
C Story Heights	--	12 ft
D Number of Stories	--	2.5 stories

DRAFT

3.2.5. House B

A house with a medium footprint and up to 2.5 stories. House B building types can be found throughout Newton. The House B type includes typical midscale Victorian homes close to village centers, and midscale Colonial homes frequently built in the era of suburban infill between Newton's historic village centers.

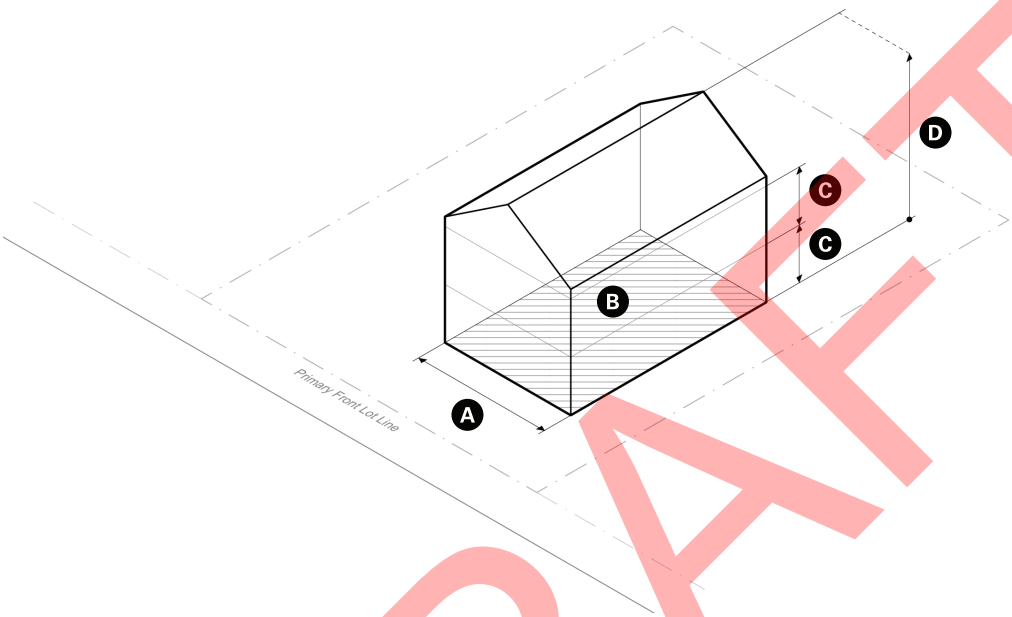

Building Dimensions	min	max
A Front Elevation Width R1	none	--
R2 R3 R4	12 ft or 25% of the lot width, whichever is greater	--
N	12 ft or 40% of the lot width, whichever is greater	--
B Building Footprint	--	1,400 sf
C Story Heights	--	12 ft
D Number of Stories	--	2.5 stories

DRAFT

3.2.6. House C

A house with a small footprint and up to 1.5 stories. House C building types are located across Newton and are most typified by the bungalow or cape house style. House C building types are most likely to have been built between the 1920s when the bungalow style gained popularity through the post-war construction boom of the 1950s.

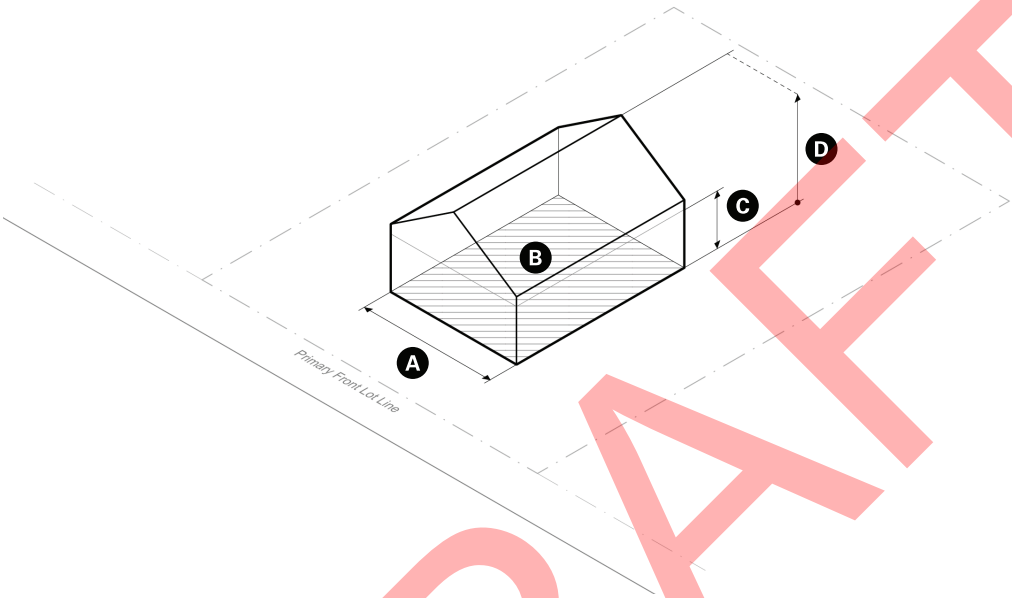

Building Dimensions	min	max
A Front Elevation Width R1	none	--
R2 R3 R4	12 ft or 25% of the lot width, whichever is greater	--
N	12 ft or 40% of the lot width, whichever is greater	--
B Building Footprint	--	1,200 sf
C Story Height	--	12 ft
D Number of Stories	--	1.5 stories

DRAFT

3.2.7. House D

A house with a large footprint and no more than 1 story. House D building types are best known as Ranch houses – and are characterized by 1-floor living with or without a basement. The House D building type is most common in southern Newton and is typical of mid-20th century development.

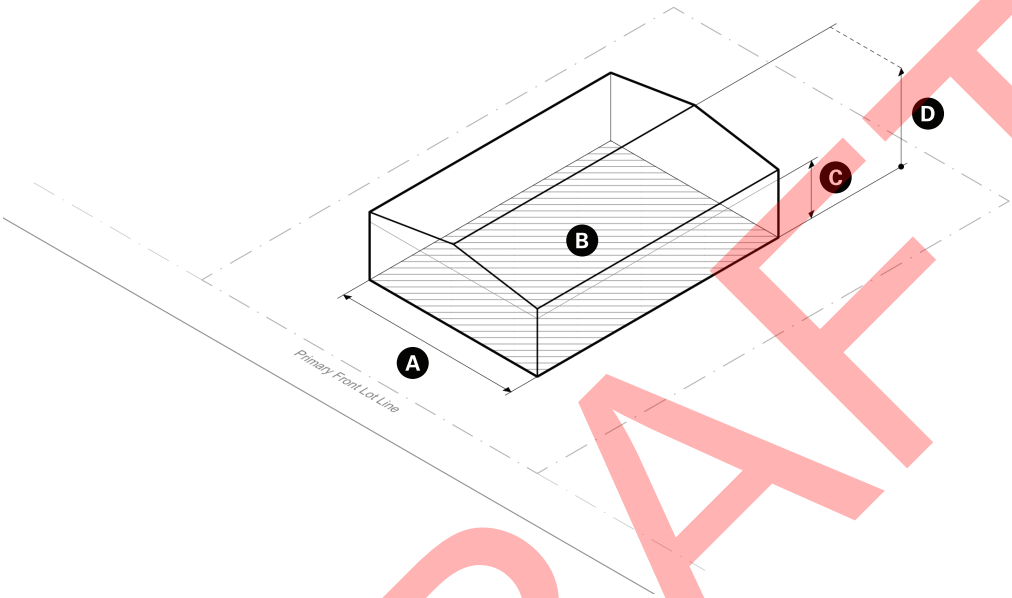

Building Dimensions	min	max
A Front Elevation Width R1 R2 (Special Permit)	none 12 ft or 25% of the lot width, whichever is greater	-- --
B Building Footprint	--	2,300 sf
C Story Heights	--	12 ft
D Number of Stories	--	1 story

DRAFT

3.2.8. Duplex

The Duplex building type is common in Newton's traditional mill village areas like the Upper Falls and Nonantum, as well as in early commuter neighborhoods near transit like West Newton, Newtonville and Auburndale. Duplex building types are organized with one unit above and one below, or the second floor is split between the two units as in the case of a "Philadelphia-style" duplex.

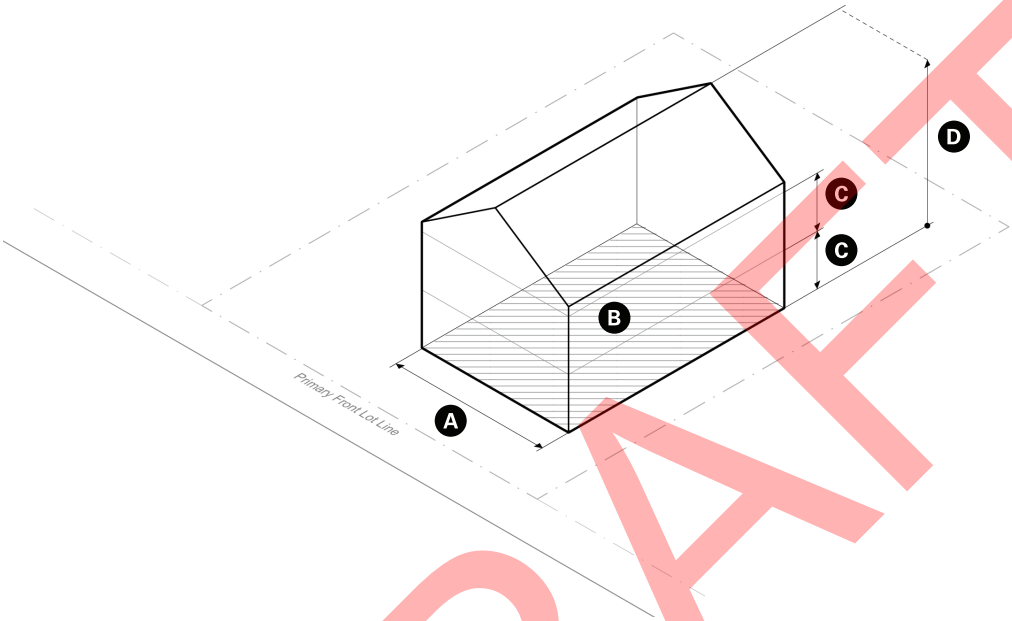

Building Dimensions	min	max
A Front Elevation Width R3 R4	12 ft or 25% of the lot width, whichever is greater	--
N	12 ft or 40% of the lot width, whichever is greater	--
B Building Footprint	--	1,800 sf
C Story Heights	--	12 ft
D Number of Stories	--	2.5 stories

DRAFT

3.2.9. Triple Decker

A small multi-unit residential building containing 3 units, vertically stacked. The scale of a Triple Decker is similar to 1- and 2-unit building types nearby, just with a few smaller than average units. Triple Decker building types were commonly built during the industrial revolution, a building type unique to New England communities.

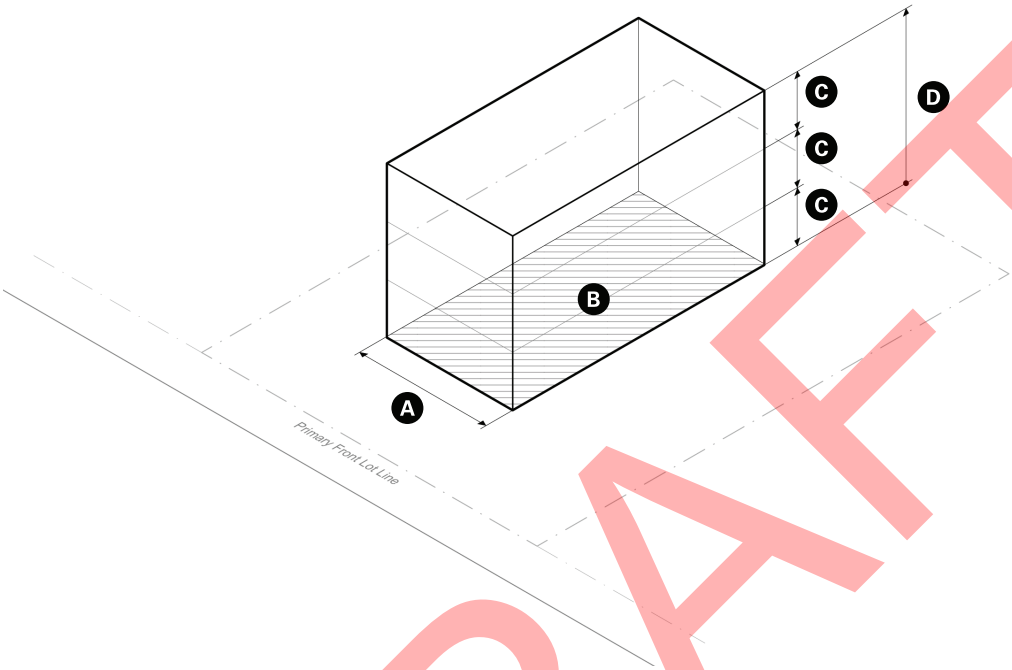

Building Dimensions	min	max
A Front Elevation Width R3 (Special Permit) R4	12 ft or 25% of the lot width, whichever is greater	--
N	12 ft or 40% of the lot width, whichever is greater	--
B Building Footprint	--	1,800 sf
C Story Heights	--	12 ft
D Number of Stories	--	3 stories

DRAFT

3.2.10. Townhouse Section

A series of connected one- to two-unit houses, called townhouse sections, with separate entrances. The townhouse section building type first are seen in Newton in the late -18th century, but most townhouses in Newton date from the late 20th and early 21st century. Traditional townhouses come up to the street with alley access from the rear. Assemblages of 3 or 4 townhouse sections are found in neighborhoods across Newton. Large townhouse complexes are more typically found in southern Newton.

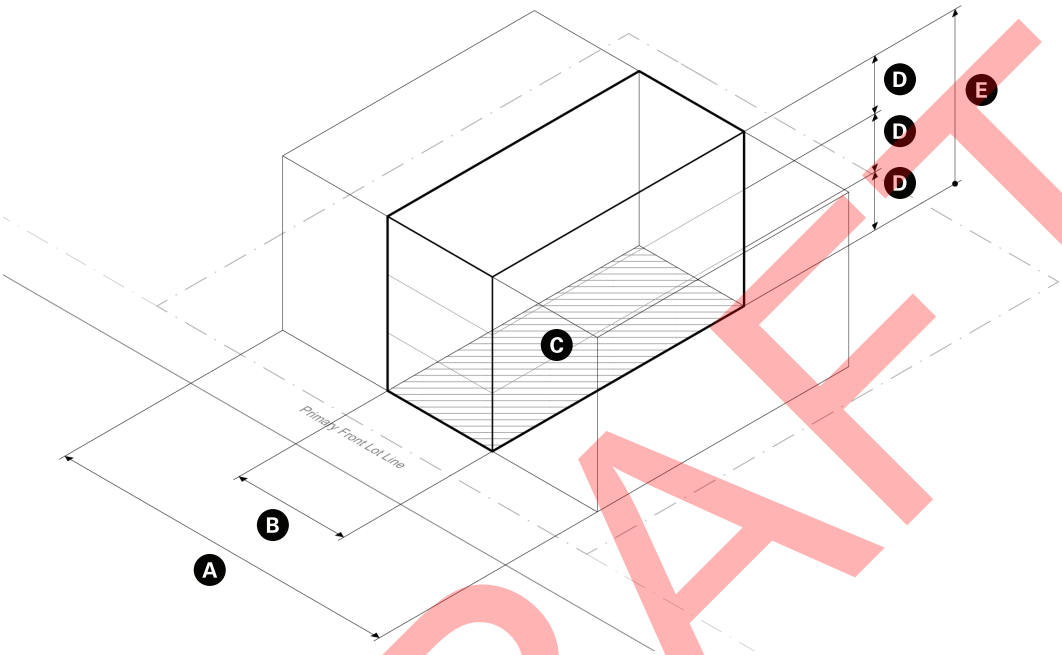

Building Dimensions	min	max
A Front Elevation Width N	12 ft or 40% of the lot width, whichever is greater	--
B Building Width	--	28 ft
C Building Footprint	--	1,500 sf
D Story Heights	--	12 ft
E Number of Stories	--	3 stories

DRAFT

3.2.11. Small Apartment House

A Small Apartment House is small multi-unit residential building. Whether built as a stand-alone building or as part of a complex, small apartment buildings typically are no taller than the peak of the roof of houses in the surrounding neighborhood and approximately the footprint of two mid-large attached house building types.

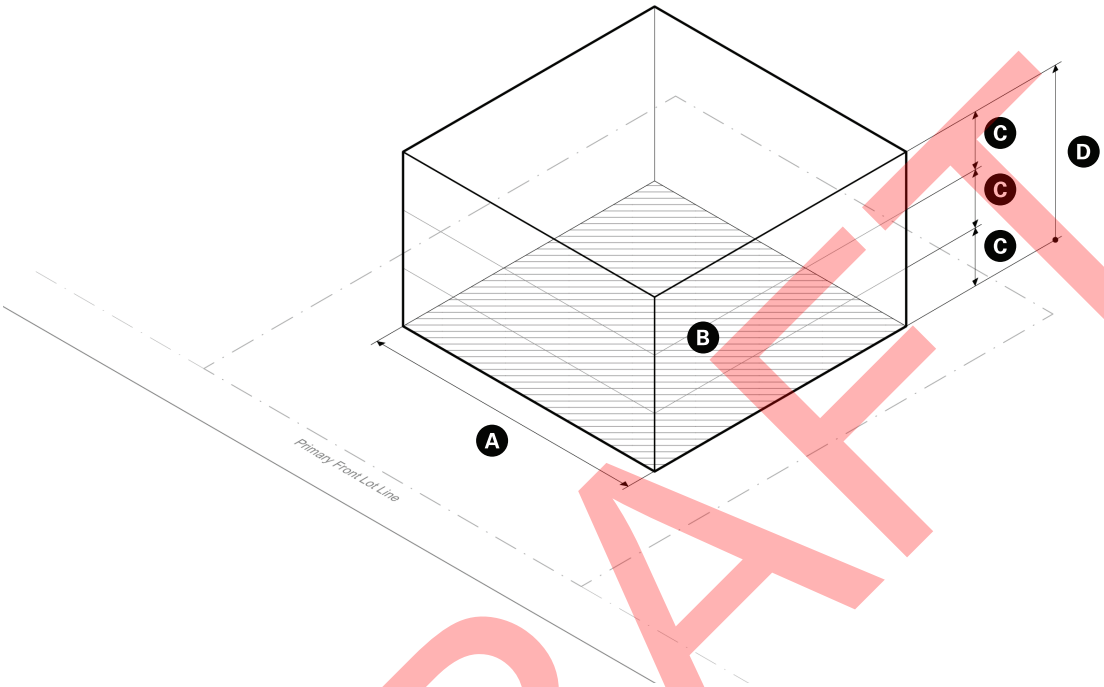

Building Dimensions	min	max
A Front Elevation Width R4 (Special Permit) N	12 ft or 25% of the lot width, whichever is greater 12 ft or 40% of the lot width, whichever is greater	-- --
B Building Footprint	--	3,600 sf
C Story Heights	--	12 ft
D Number of Stories	--	3 stories

DRAFT

3.2.12. Shop House

A small mixed-use building, typically a house with a ground floor shopfront containing a commercial use. Shop houses typically start as house or townhouse section building types with a shopfront added to the front elevation. Shop houses are commonly found at the edges of Newton's traditional village centers and can contain a variety of uses. Often shop houses are grouped together as multi-building assemblages.

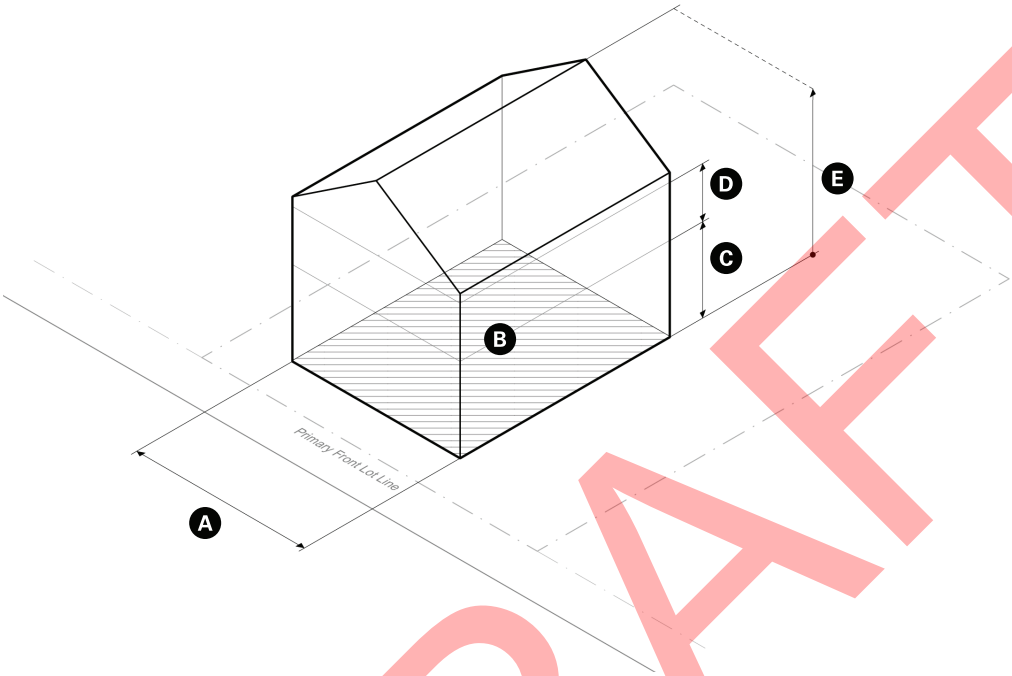

Building Dimensions	min	max
A Front Elevation Width N	12 ft or 40% of the lot width, whichever is greater	--
B Building Footprint	--	2,000 sf
C Ground Story Height D Upper Story Heights	-- --	20 ft 12 ft
E Number of Stories	--	2.5 stories

DRAFT

3.2.13. Small Multi-Use Building

A small mixed-use building that has ground floor commercial activity along the frontage and either residential or commercial uses on the upper floors. Small multi-use building types are found in many village centers in Newton.

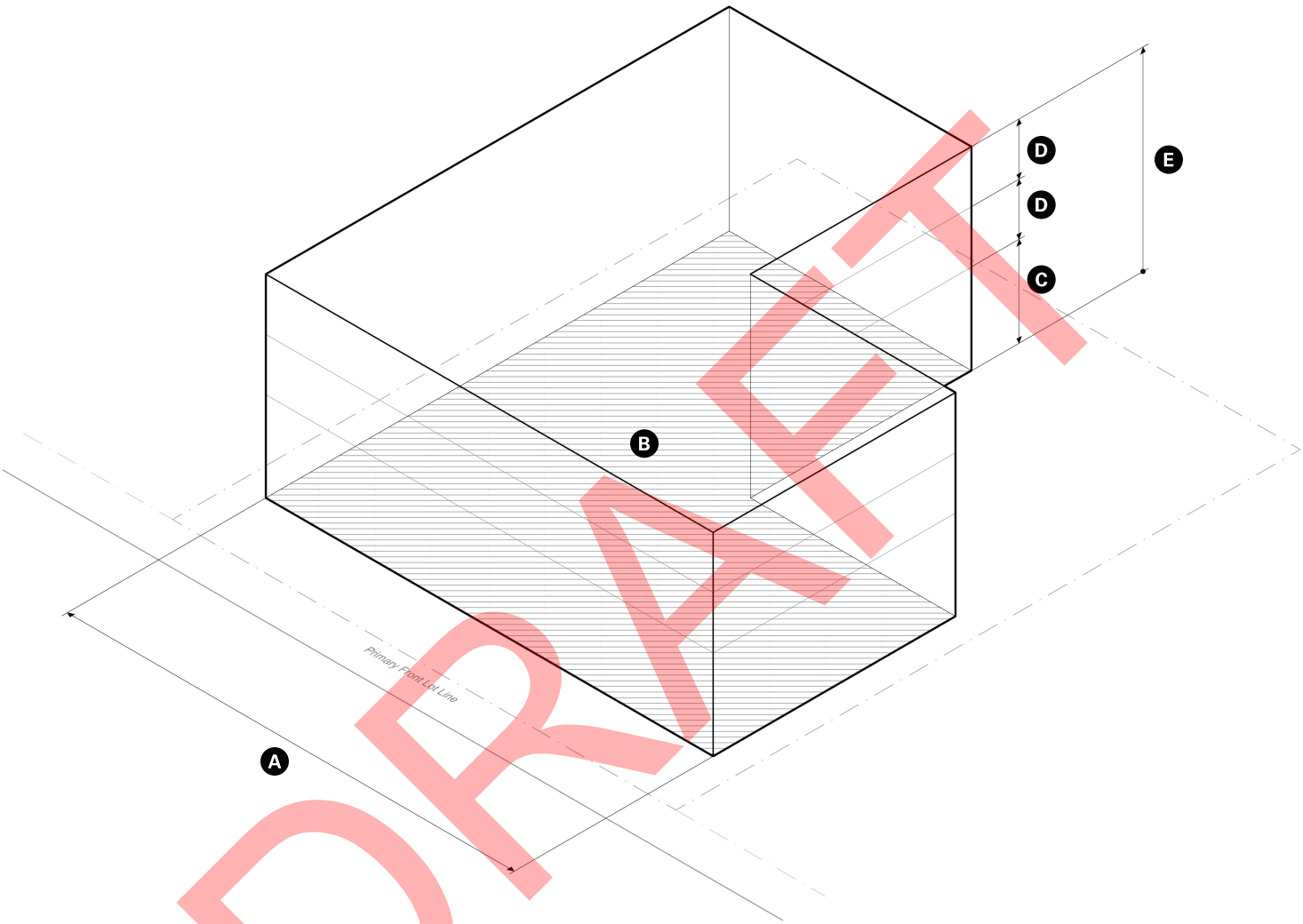

DRAFT

Building Dimensions	min	max
A Front Elevation Width N (Special Permit) Building Width	 12 ft or 40% of the lot width, whichever is greater --	 -- 100 ft
B Building Footprint	--	12,000 sf
C Ground Story Height D Upper Story Heights	14 ft 10 ft	24 ft 14 ft
E Number of Stories	--	3 stories

3.3.2.A Bay

A bay is a window assembly extending from the main body of a building to permit increased light, provide multi-direction views, and articulate a building wall. Two Bays can connect around corners to create distinctive living space or terminate in an important axis.

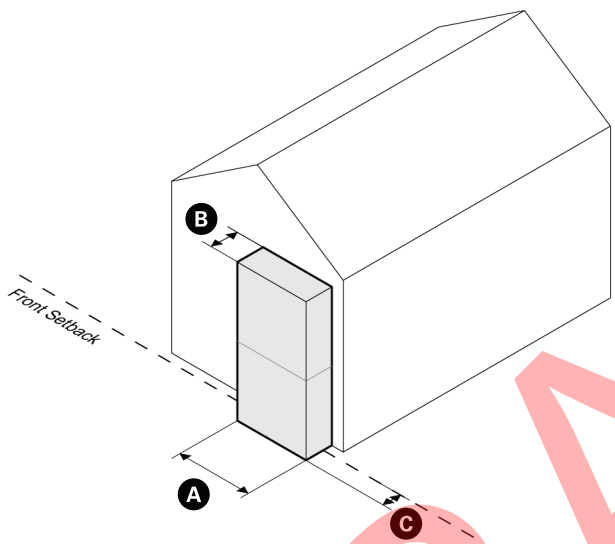

Dimensions	min	max
A Width (each bay)	--	Greater than 20% of wall length or 12 ft
B Depth	--	6 ft
C Front Setback Encroachment	--	3 ft
Side & Rear Setback Encroachment	--	0 ft

DRAFT

3.3.2.B Balcony

An unenclosed platform with a railing that provides outdoor amenity space on upper stories.

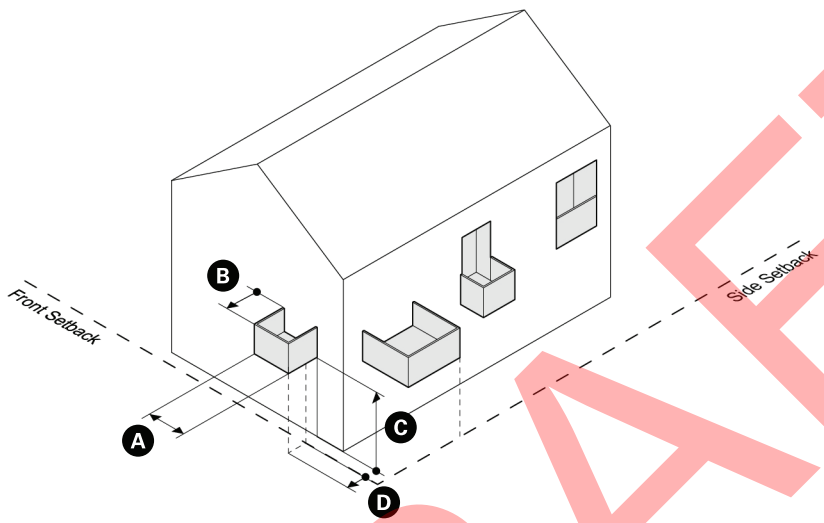

Dimensions	min	max
A Width (each balcony)	5 ft	Greater than 20% of wall length or 12 ft
B Depth	3 ft	8 ft
C Clearance	10 ft	--
D Front Setback Encroachment	--	3 ft
Side & Rear Setback Encroachment	--	0 ft

DRAFT

3.3.2.C Porch

An unenclosed platform connected to a principal building that provides outdoor amenity space forward of the front elevation.

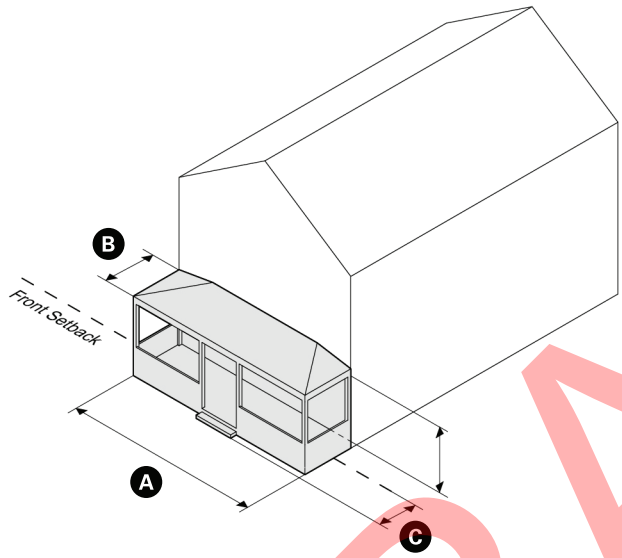

Dimensions	min	max
A Width	8 ft	Same as Principal Building elevation width
B Depth	6 ft	--
C Front Setback Encroachment	--	6 ft
Side & Rear Setback Encroachment	--	0 ft

DRAFT

3.3.2.D Projecting Entry

An enclosed or unenclosed entry to a principal building.

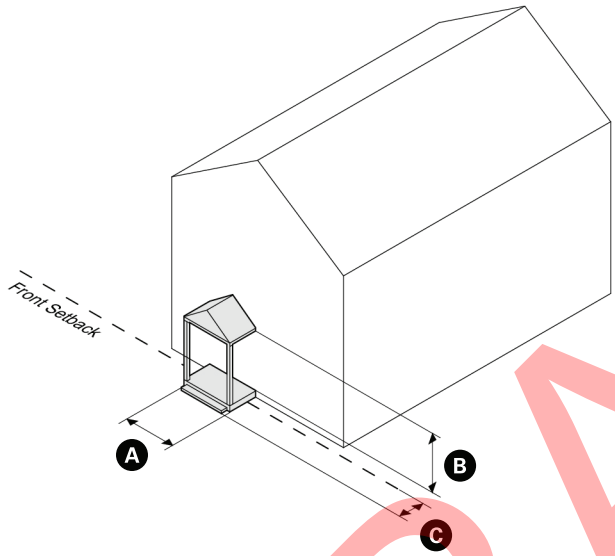

Dimensions	min	max
A Width	4 ft	8 ft or 20% of the Principal Building elevation whichever greater
B Ceiling Height	--	12 ft
C Front Setback Encroachment	--	4 ft
Side & Rear Setback Encroachment	--	0 ft

DRAFT

3.3.2.E Side Wing

A multi-story extension from one or more side walls of a building. A Side Wing constitutes a Building Component only if its addition to the Main Massing of a Principal Building would exceed the maximum Building Footprint for that Building Type. A Side Wing added to a Principal Building that does not exceed the maximum Building Footprint for that Building Type shall be part of the Main Massing of the building.

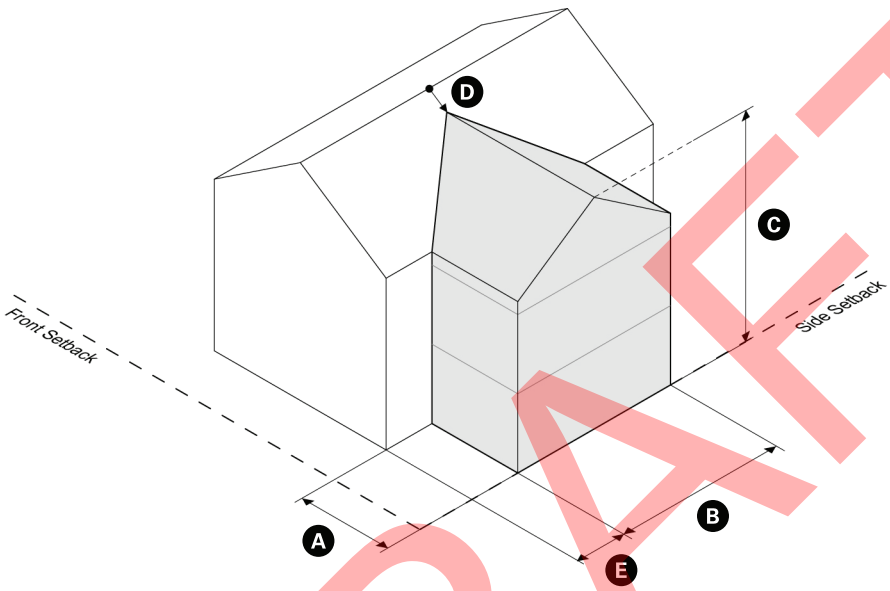

Dimensions	min	max
A Width	--	50% of Front Elevation width
B Depth	--	100% of Front Elevation width
C Height	--	Stories equal to the principal building type
D Roof Ridge Offset	4 ft	--
E Setback from Front Elevation	8 ft	--
Front Setback Encroachment	--	0 ft
Side & Rear Setback Encroachment	--	0 ft

DRAFT

3.3.2.G Rear Addition

A rear addition is an extension from the rear wall of a building. A Rear Addition constitutes a Building Component only if its addition to the Main Massing of a Principal Building would exceed the maximum Building Footprint for that Building Type. A rear addition added to a Principal Building that does not exceed the maximum Building Footprint for that Building Type shall be part of the Main Massing of the building.

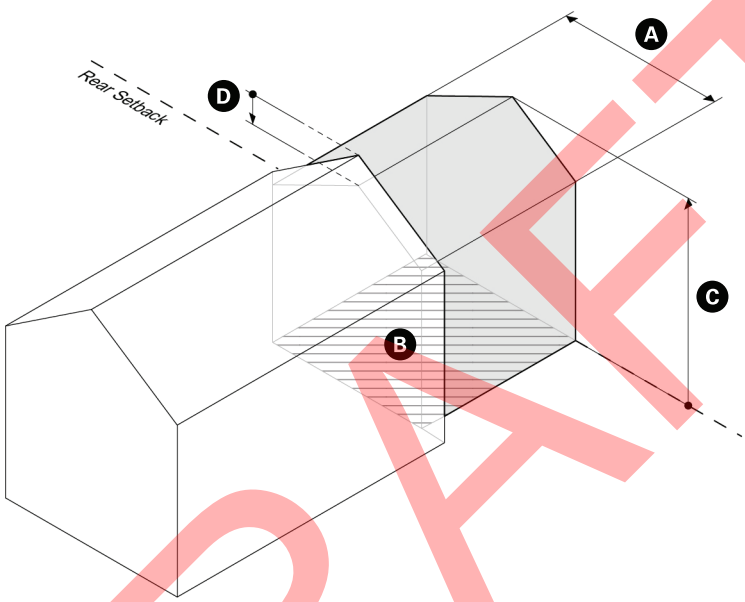

Dimensions	min	max
A Width	--	Max width of rear wall less 2 ft
B Footprint	--	50% of Principal Building Footprint
C Height	--	Stories equal to the principal building type
D Roof Ridge Offset	--	4 ft
Front Setback Encroachment	--	0 ft
Side & Rear Setback Encroachment	--	0 ft

DRAFT

3.3.3.A Dormer

A Dormer is a windowed roof form that projects vertically from a sloped roof to provide light into and increase the habitable space of a half-story. A Dormer constitutes a Building Component only if its addition to the Main Massing of a Principal Building would exceed the maximum Number of Stories or Story Height for that Building Type. A dormer added to a Principal Building that does not exceed the maximum Number of Stories or Story Height for that Building Type shall be part of the Main Massing of the building.

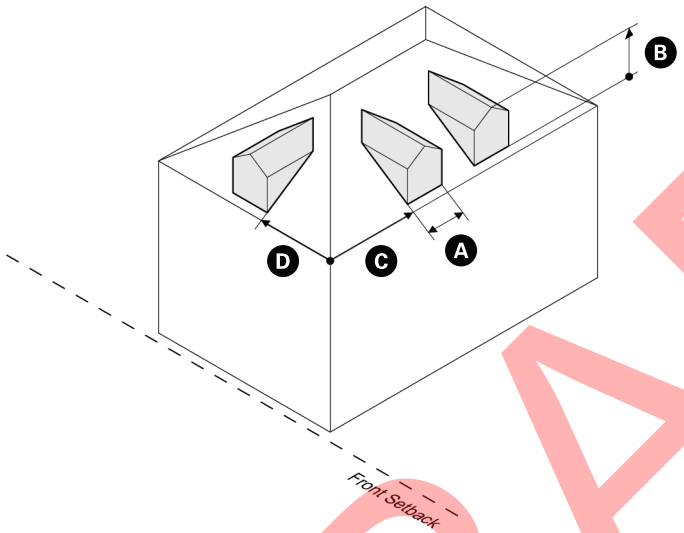

Dimensions	min	max
A Width of each Dormer	--	Window(s) width + 18 in. No dormer may be wider than 50% of the length of the exterior wall of the story next below
Width of all Dormers on the same side of the roof combined	--	must not exceed 50% of the length of the exterior wall next below
B Height of Dormer	--	may not extend above the roof ridge line

Dimensions	min	max
C Side Wall Setback Roof with eave Roof without eave	 0 ft 1 ft	 -- --
D Front and Rear Wall Setback	3 ft	--
Front Setback Encroachment	--	0 ft
Side & Rear Setback Encroachment	--	0 ft

DRAFT

3.3.3.B Cross Gable

A cross gable is a sloped roof that projects perpendicularly from the main roof of a building to increase the habitable space of a half story or add architectural distinction to a half-story.

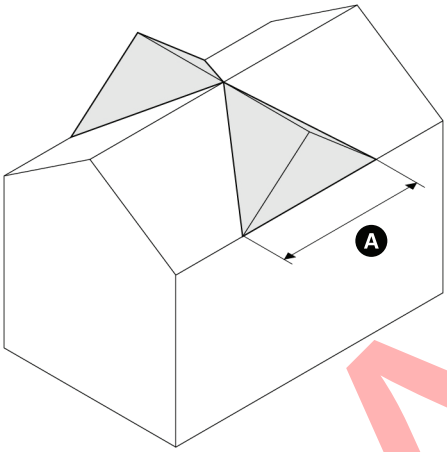

Dimensions	min	max
A Width	--	may not exceed 50% of the eave length of the roof to which it connects

DRAFT

3.3.3.C Roof Deck

A raised uncovered platform with a railing on the roof of a building that provides outdoor amenity space and access to views.

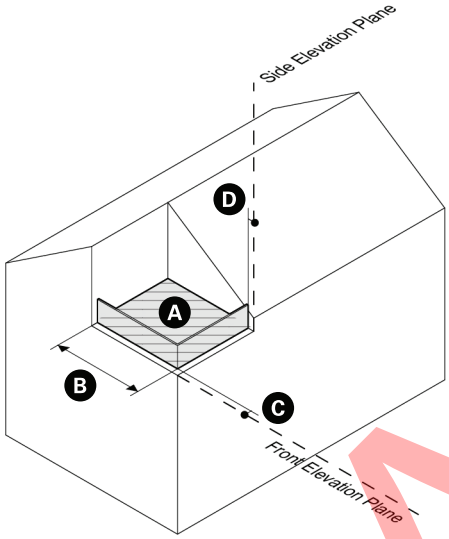

Dimensions	min	max
A Area	--	the lesser of 400 sf or 20% of the footprint of the building
B Width	--	50% of the building width, except on a flat roof it may extend up to the full width of the roof
Setback from building elevation C Front D Side and Rear	 10 ft 5 ft *waived if the parapet wall is utilized as the roof deck guardrail, provided it is sufficient height.	 -- --

DRAFT