CITY OF NEWTON
PURCHASING DEPARTMENT

CONTRACT FOR PUBLIC WORKS – UTILITIES DIVISION

PROJECT MANUAL:

SUPPLY & DELIVER

CAST IRON CATCHBASIN FRAMES,

GRATES, MANHOLE FRAMES, COVERS & RINGS

INVITATION FOR BID #17-35

Bid Opening Date: November 10, 2016 at 11:30 a.m.

OCTOBER 2016

Setti D. Warren, Mayor

CITY OF NEWTON

PURCHASING DEPARTMENT

INVITATION FOR BID #17-35

The City of Newton (City) invites sealed bids in accordance with M.G.L. c.30B from Contractors for:

SUPPLY & DELIVER CAST IRON CATCHBASIN FRAMES, GRATES, MANHOLE FRAMES, COVERS & RINGS

Bids will be received until: **11:30 a.m., Thursday, November 10, 2016**
at the Purchasing Department, Room 201, Newton City Hall, 1000 Commonwealth Avenue, Newton, MA 02459. Bids will not be accepted nor may submitted bids be corrected, modified or withdrawn after the deadline for bids. Following the deadline for bids, all bids received within the time specified will be publicly opened and read aloud.

Work under this contract requires a contractor to supply and deliver Manhole & Catch Basin Frames, Grates, Covers and Rings in accordance with the Project Manual.

The contract will be awarded to the responsive and responsible bidder offering the lowest total contract price for all items.

The term of this contract shall **extend from day of contract execution through for one year and shall not exceed the contract amounts, except only up to 25% in accordance with M.G.L. c. 30B, §13.**

Contract Documents will be available online at the City's website: **www.newtonma.gov/bids** after: **10:00 a.m., October 27, 2016.** Bidders are responsible for downloading the specifications from the City's web site at **www.newtonma.gov/bids.** Bidders are requested to email the Purchasing Department (purchasing@newtonma.gov) their Company Name, Address, Email address, Phone & Facsimile number and what bid # (i.e. #17-35) they have downloaded.

Bid surety is not required for this bid.

All bids are subject to the provisions of M.G.L. Chapter 30B.

All bids must be submitted with one ORIGINAL and one COPY. All prices shall be FOB Delivered Newton, MA.

All City of Newton bids are available on the City's web site, **www.newtonma.gov/bids.** Invitation for Bid. It is the sole responsibility of the contractor downloading these bids to ensure they have received any and all addenda prior to the bid opening. Addenda's will be available online within the original bid document as well as a separate file. If you download bids from the internet site and would like to make it known that your company has done so, you may fax the Purchasing Department (617) 796-1227 or email to purchasing@newtonma.gov with your NAME, ADDRESS, PHONE, FAX AND INVITATION FOR BID NUMBER #17-35.

The City will reject any and all bids in accordance with the above referenced General Laws. In addition, the City reserves the right to waive any informalities in any or all bids, or to reject any or all bids (in whole or in part) if it be in the public interest to do so.

In the event that any person wishes to attend a bid opening or pre-bid meeting, accessible and reasonable accommodations will be provided to persons requiring assistance. If you need a reasonable accommodation, please contact the city of Newton's ADA Coordinator, Jini Fairley, at least two business days in advance of the meeting: jfairley@newtonma.gov or (617) 796-1253. For Telecommunications Relay Service, please dial 711.

CITY OF NEWTON

Nicholas Read
Chief Procurement Officer
October 27, 2016

CITY OF NEWTON

DEPARTMENT OF PURCHASING

INSTRUCTIONS TO BIDDERS

ARTICLE 1 - BIDDER'S REPRESENTATION

1.1 Each General Bidder (hereinafter called the "Bidder") by making a bid (hereinafter called "bid") represents that the Bidder has read and understands the Bidding Documents, Contract Forms, General Conditions, Conditions of the Contract, General Requirements and Project Specifications (collectively, referred to as the "Contract Documents") and the bid is made in accordance therewith.

1.2 Failure to so examine the Contract Documents will not relieve any Bidder from any obligation under the bid as submitted.

ARTICLE 2 - REQUEST FOR INTERPRETATION

2.1 Bidders shall promptly notify the City of any ambiguity, inconsistency, or error which they may discover upon examination of the Contract Documents, the site, and local conditions, as applicable.

2.2 Bidders requiring clarification or interpretation of the Contract Documents shall make a written request to the *Chief Procurement Officer*, at purchasing@newtonma.gov or via facsimile (617) 796-1227. The City will only answer such requests if received by **Friday, November 4, 2016 at 12:00 noon**. In the event that the bid opening date is changed, the deadline for informational requests may also change as provided in an addendum issued by the City.

2.3 Interpretation, correction, or change in the Contract Documents will be made by addendum which will become part of the Contract Documents. The City will not be held accountable for any oral communication.

2.4 Addenda will be emailed to every individual or firm on record as having taken a set of Contract Documents. Addenda will be emailed to every individual or firm on record as having taken a set of Contract Documents. Receipt of all addenda issued must be acknowledged in the Bid Form. YOUR FAILURE TO ACKNOWLEDGE ALL ADDENDA MAY RESULT IN YOUR BID BEING REJECTED AS NON-RESPONSIVE.

2.5 Copies of addenda will be made available for inspection at the location listed in the Invitation for Bids where Contract Documents are on file, in addition to being available online at **www.newtonma.gov/bids**.

2.6 Bidders or proposers contacting ANY CITY EMPLOYEE regarding an Invitation for Bid (IFB) or a Request for Proposal (RFP), outside of the Purchasing Department, once an IFB or RFP has been released, may be disqualified from the procurement process.

2.7 Bidders downloading information off the internet web site are solely responsible for obtaining any addenda prior to the bid opening. If the bidder makes itself known to the Purchasing Department, at purchasing@newtonma.gov or via facsimile (617) 796-1227, it shall be placed on the bidder's list. Bidders must provide the Purchasing Department with their company's name, street address, city, state, zip, phone, fax, email address and **INVITATION FOR BID #17-35**.

ARTICLE 3 - MBE PARTICIPATION

3.1 Notice is hereby given that the Mayor's Affirmative Action Plan for the City of Newton in effect at the time of this solicitation is applicable to all construction contracts in excess of $10,000.00.

3.2 Notice is hereby given that the City of Newton Minority/Women Business Enterprise Plan and the Supplemental Equal Employment Opportunity Anti-Discrimination and Affirmative Action Program in effect at the time of this solicitation are applicable to all City contracts for goods and services in excess of $50,000.00.

3.3 Copies of the Plans and Program referred to in Sections 3.1 and 3.2 are available at: **www.newtonma.gov/purchasing**.

ARTICLE 4 - PREPARATION AND SUBMISSION OF BIDS

4.1 Bids shall be submitted on the "Bid Form #17-35," attached.

4.2 All entries on the Bid Form shall be made by typewriter or in ink.

4.3 Where so indicated on the Bid Form, sums shall be expressed in both words and figures. Where there is a discrepancy between the bid sum expressed in words and the bid sum expressed in figures, the words shall control.

4.4 The Bid, including the bid deposit shall be enclosed in a sealed envelope with the following plainly marked on the outside:

* GENERAL BID FOR: **#17-35**

* NAME OF PROJECT: **Supply & Deliver Cast Iron Catchbasin Frames, Grates, Manhole Frames, Covers & Rings**

* BIDDER'S NAME, BUSINESS ADDRESS, AND PHONE NUMBER

4.5 Date and time for receipt of bids is set forth in the Invitation for Bids.

4.6 Timely delivery of a bid at the location designated shall be the full responsibility of the Bidder. In the event that Newton City Hall is closed on the date or at the time that bids are due, the date and time for receipt of bids shall be on the next business day following that the Newton City Hall and the Purchasing Department are open.

4.7 Bids shall be submitted with one **original** and one **copy.**

4.8 Be advised that a new Massachusetts law has been enacted that required all employees who work on Massachusetts public works construction sites must have no less than 10 hours of OSHA-approved safety and health training. See Chapter 306 of the Acts of 2004, which became effective July 1, 2006.

1. This requirement will apply to any general bid or sub bid submitted.
2. This law directs the Massachusetts Attorney General to restrain the award of construction contracts to any contractor who is in violation to this requirement and to restrain the performance of these contracts by non-complying contractors.
3. The contractor and all subcontractors on this project will be required to provide certification of compliance with this requirement. Non-compliance with this law will disqualify you from bidding on public contracts.

ARTICLE 5 - ALTERNATES

5.1 Each Bidder shall acknowledge alternates (if any) in Section C on the Bid Form.

5.2 In the event an alternate does not involve a change in the amount of the base bid, the Bidder shall so indicated by writing "No Change", or "N/C" or "0" in the space provided for that alternate.

5.3 Bidders shall enter on the Bid Form a single amount for each alternate which shall consist of the amount for work performed by the Contractor.

5.4 The low Bidder will be determined on the basis of the sum of the base bid and the accepted alternates.

ARTICLE 6 - WITHDRAWAL OF BIDS

6.1 Any bid may be withdrawn prior to the time designated for receipt of bids on written or electronic request. Electronic withdrawal of bids must be confirmed over the Bidder's signature by written notice postmarked on or before the date and time set for receipt of bids.

6.2 Withdrawn bids may be resubmitted up to the time designated for the receipt of bids.

6.3 No bids may be withdrawn within sixty (60) days, Saturdays, Sundays and legal holidays excluded, after the opening of the bids.

ARTICLE 7 - CONTRACT AWARD

7.1 The City is soliciting prices for items set forth in Bid Form #17-35, attached hereto. It is the City's intent to award one (1) contract to the responsive and responsible bidder offering the lowest Grand Total . A contract will be awarded within sixty (60) days, Saturdays, Sundays, and legal holidays excluded, after the opening of bids.

7.2 The City reserves the right to waive minor informalities in or to reject any or all Bids if it be in the public interest to do so.

7.3 The City reserves the right to reject any bidder who has failed to pay any local taxes, fees, assessments, betterments, or any other municipal charge, unless the bidder has a pending abatement application or has entered into a payment agreement with the collector-treasurer.

7.4 As used herein, the term "lowest responsive and responsible Bidder" shall mean the Bidder (1) whose bid is the lowest of those bidders possessing the skill, ability and integrity necessary for the faithful performance of the work; (2) who has met all the requirements of the invitation for bids; (3) who shall certify that he is able to furnish labor that can work in harmony with all other elements of labor employed or to be employed in the work; (4) who, where the provisions of section eight B of chapter twenty-nine apply, shall have been determined to be qualified thereunder.

7.5 Subsequent to the award and within five (5) days, Saturday, Sundays and legal holidays excluded, after the prescribed forms are presented for signature, the successful Bidder shall execute and deliver to the City a contract in the form included in the Contract Documents in such number of counterparts as the City may require.

7.6 In the event that the City receives low bids in identical amount from two or more responsive and responsible Bidders, the City shall select the successful Bidder by a blind selection process chosen by the City such as flipping a coin or drawing names from a hat. The low Bidders who are under consideration will be invited to attend and observe the selection process.

ARTICLE 8 - TAXES

8.1 The Bidder shall not include in this bid any tax imposed upon the sale or rental of tangible personal property in this Commonwealth, such as any and all building materials, supplies, services and equipment required to complete the work.

8.2 The City is exempt from payment of the Massachusetts Sales Tax, and the Bidder shall not include any sales tax on its bid. The City's exemption Number is E-046-001-404.

ARTICLE 9 – PROPRIETARY SPECIFICATIONS

9.1 The City may have used a proprietary specification to describe the supply for which is soliciting bids. Such specifications are permitted under M.G.L. c. 30B, §14, provided that the Chief Procurement Officer has prepared a written statement that no other manner of description suffices and the justification therefor.

9.2 The required determination and justification have been duly prepared, and a copy may be requested in accordance with the Massachusetts Public Records Law, M.G.L. c. 66, §10.

ARTICLE 10 – ENVIRONMENTALLY PREFERABLE PRODUCTS

10.1 The City encourages environmentally preferable products, i.e., products or services that have less negative or more positive effects on human health and the environment when compared with competing products or services that serve the same purpose. The city encourages bidders to describe, in the space provided on the Bid Form, the environmental attributes of its goods or services throughout the entire life-cycle, including manufacture, use and disposition. This information may include multiple environmental considerations such as natural resource use, recycled content, energy and water efficiency, greenhouse gas emissions, impact on climate change, packaging, hazardous material use, and health and safety impacts on workers, consumers and the community. If you do not currently assess such attributes, please indicate that. However you respond, the City will not take your information into account in evaluating bid proposals.

10.2 Bidders are encouraged also to provide information related to steps they take internally to (a) identify any positive or negative environmental attributes of products or services they offer, as specified above, and (b) insure that those attributes are being addressed as part of operations.

END OF SECTION

CITY OF NEWTON

DEPARTMENT OF PURCHASING

BID FORM #17-35

A. The undersigned proposes to supply and deliver the materials and/or equipment and/or supplies specified below in full accordance with the Contract Documents and Project Manual supplied by the City of Newton entitled:

Supply & Deliver: Cast Iron Catchbasin Frames & Grates & Manhole Frames, Covers & Rings

for the contract price(s) specified below, subject to additions and deduction according to the terms of the specifications.

B. This bid includes addenda number(s) _____, _____, _____, _____,

C. The Bidder proposes to furnish and deliver the materials specified at the following price(s):

ITEM	DESCRIPTION	QUANTITY*	UNIT PRICE	TOTAL PRICE
1.	**24" Manhole Sets**			
	a. Frame and Cover	40	$_____	$_____
	b. Cover Only	10	$_____	$_____
	c. Frame Only	10	$_____	$_____
	d. Watertight Dual Cover	5	$_____	$_____
2.	**24" Catch Basin Sets**			
	a. Frame and Grate (3 Flange)	30	$_____	$_____
	b. Grate Only	30	$_____	$_____
	c. Frame Only (4 Flange)	10	$_____	$_____
3.	**Double Catch Basin Sets**			
	a. Frame and Grate	5	$_____	$_____
	b. Frame Only	5	$_____	$_____
4.	**24" Manhole Extension Rings**			
	a. 1" Riser	100	$_____	$_____
	b. 1 1/2" Riser	50	$_____	$_____
5.	**Catchbasin Extension Rings**			
	a. ¾" Riser	95	$_____	$_____
	b. 1" Riser	50	$_____	$_____
6.	**6" Gate Valve Extension Rings**			
	a. 1" Riser	100	$_____	$_____
	b. 1 ½" Riser	30	$_____	$_____
			Grand Total*	$_____

COMPANY: _____

**Quantities provided are estimates of the City's likely use. The City may purchase more, or may purchase less, than the estimated quantity. Whatever quanitity purchased, the unit price shall be that stated above.*

D. The undersigned has completed and submits herewith the following documents:

- Bidder's Qualification Form and References, 2 pages
- Certificate of Non-Collusion, 1 page
- Debarment Letter, 1 page
- IRS Form W-9, 1 page
- Signed Original Bid Form and one COPY, 2 pages

E. Prompt Payment Discounts. Bidders are encouraged to offer discounts in exchange for an expedited payment. Payments may be issued earlier than the general goal of within 30 days of receipt of the invoice only when in exchange for discounted prices. Discounts will not be considered in determining the lowest responsible bidder.

Prompt Payment Discount _____%_____Days
Prompt Payment Discount_____%_____ Days
Prompt Payment Discount _____%_____Days

F. The undersigned agrees that, if selected as contractor, s/he will within five days, Saturdays, Sundays and legal holidays excluded, after presentation thereof by the City of Newton, execute a contract in accordance with the terms of this bid. The undersigned hereby certifies that s/he is able to furnish labor that can work in harmony with all other elements of labor employed or to be employed on the work and that's/he will comply fully with all laws and regulations applicable to awards made subject to M.G.L. Chapter 30B.

The undersigned further certifies under the penalties of perjury that this bid has been made and submitted in good faith and without collusion or fraud with any other person. As used in this section the word "person" shall mean any natural person, business, partnership, corporation, union, committee, club or other organization, entity, or group of individuals. The undersigned further certifies under penalty of perjury that the said undersigned is not presently debarred from public contracting or subcontracting in the Commonwealth under the provisions of M.G.L. Chapter 29, Section 29F or any other applicable debarment provisions of any other chapter of the General Laws or any rule or regulation promulgated thereunder.

G. Environmentally preferable products information (which is requested but which will not be considered in awarding a contract):

Description of environmental attributes of Bidder's goods or services:

Steps taken to (a) identify any positive or negative environmental attributes of products or services and (b) insure that those attributes are being addressed as part of operations:

Date _____

_____
(Name of Bidder)

By: _____

_____
(Printed Name and Title of Signatory)

_____
(Business Address)

_____
(City, State Zip)

_____
(Telephone & FAX)

_____
(E-mail address)

NOTE: If the bidder is a corporation, indicate state of incorporation under signature, and affix corporate seal; if a partnership, give full names and residential addresses of all partners; if an individual, give residential address if different from business address; and, if operating as a d/b/a give full legal identity. Attach additional pages as necessary.

END OF SECTION

CITY OF NEWTON

BIDDER'S QUALIFICATIONS AND REFERENCES FORM

All questions must be answered, and the data given must be clear and comprehensive. Please type or print legibly. If necessary, add additional sheet for starred items. This information will be utilized by the City for purposes of determining bidder responsiveness and responsibility with regard to the requirements and specifications of the Contract.

1. FIRM NAME: _____

2. WHEN ORGANIZED: _____

3 INCORPORATED? _____ YES _____ NO DATE AND STATE OF INCORPORATION: _____

4. IS YOUR BUSINESS A **MBE**? _____YES _____NO **WBE**? _____YES _____NO or **MWBE**? _____YES _____NO

* 5. LIST ALL CONTRACTS CURRENTLY ON HAND, SHOWING CONTRACT AMOUNT AND ANTICIPATED DATE OFCOMPLETION:

_____
_____
_____
_____
_____

* 6. HAVE YOU EVER FAILED TO COMPLETE A CONTRACT AWARDED TO YOU?
_____ YES _____ NO
IF YES, WHERE AND WHY?

_____
_____

* 7. HAVE YOU EVER DEFAULTED ON A CONTRACT? _____ YES _____ NO
IF YES, PROVIDE DETAILS.

_____
_____

* 8. LIST YOUR VEHICLES/EQUIPMENT AVAILABLE FOR THIS CONTRACT:

_____
_____
_____
_____
_____
_____
_____

* 9. IN THE SPACES FOLLOWING, PROVIDE INFORMATION REGARDING CONTRACTS COMPLETED BY YOUR FIRM SIMILAR IN NATURE TO THE PROJECT BEING BID. A MINIMUM OF FOUR (4) CONTRACTS SHALL BE LISTED. PUBLICLY BID CONTRACTS ARE PREFERRED, BUT NOT MANDATORY.

PROJECT NAME: _____
OWNER: _____
CITY/STATE: _____
DOLLAR AMOUNT: $ _____ DATE COMPLETED: _____
PUBLICLY BID? _____YES _____ NO
TYPE OF WORK?: _____

CONTACT PERSON: _____ TELEPHONE #: ____)_____
CONTACT PERSON'S RELATION TO PROJECT?: _____
(i.e., contract manager, purchasing agent, etc.)

_____

PROJECT NAME: _____
OWNER: _____
CITY/STATE: _____
DOLLAR AMOUNT: $ _____ DATE COMPLETED: _____
PUBLICLY BID? _____YES _____ NO
TYPE OF WORK?: _____
CONTACT PERSON: _____ TELEPHONE #: (____)_____
CONTACT PERSON'S RELATION TO PROJECT?: _____
(i.e., contract manager, purchasing agent, etc.)

_____

PROJECT NAME: _____
OWNER: _____
CITY/STATE: _____
DOLLAR AMOUNT: $ _____ DATE COMPLETED: _____
PUBLICLY BID? _____YES _____ NO
TYPE OF WORK?: _____
CONTACT PERSON:_____ TELEPHONE #: (____)_____
CONTACT PERSON'S RELATION TO PROJECT?:_____
(i.e., contract manager, purchasing agent, etc.)

_____

PROJECT NAME: _____
OWNER: _____
CITY/STATE: _____
DOLLAR AMOUNT: $ _____ DATE COMPLETED: _____
PUBLICLY BID? _____YES _____ NO
TYPE OF WORK?: _____
CONTACT PERSON: _____ TELEPHONE #:(____)_____
CONTACT PERSON'S RELATION TO PROJECT?: _____
(i.e., contract manager, purchasing agent, etc.)

10. The undersigned certifies that the information contained herein is complete and accurate and hereby authorizes and requests any person, firm, or corporation to furnish any information requested by the City in verification of the recitals comprising this statement of Bidder's qualifications and experience.

DATE: _____ BIDDER: _____

SIGNATURE: _____

PRINTED NAME: _____ TITLE: _____

END OF SECTION

CERTIFICATE OF NON-COLLUSION

The undersigned certifies under penalties of perjury that this bid or proposal has been made and submitted in good faith and submitted in good faith and without collusion or fraud with any other person. As used in this certification, the word "person" shall mean any natural person, business, partnership, corporation, union, committee club, or other organization, entity, or group or individuals.

_____
(Signature of individual)

_____
Name of Business

City of Newton

Mayor
Setti D. Warren

Purchasing Department
Nicholas Read ® *Chief Procurement Officer*
1000 Commonwealth Avenue
Newton Centre, MA 02459-1449
purchasing@newtonma.gov

Telephone
(617) 796-1220
Fax:
(617) 796-1227
TDD/TTY
(617) 796-1089

Date

Vendor

Re: Debarment Letter for Invitation For Bid #_____

As a potential vendor on the above contract, the City requires that you provide a debarment/suspension certification indicating that you are in compliance with the below Federal Executive Order. Certification can be done by completing and signing this form.

Debarment:
Federal Executive Order (E.O.) 12549 "Debarment and Suspension" requires that all contractors receiving individual awards, using federal funds, and all sub-recipients certify that the organization and its principals are not debarred, suspended, proposed for debarment, declared ineligible, or voluntarily excluded by any Federal department or agency from doing business with the Federal Government.

I hereby certify under pains and penalties of perjury that neither I nor any principal(s) of the Company identified below is presently debarred, suspended, proposed for debarment, declared ineligible, or voluntarily excluded from participation in this transaction by any federal department or agency.

_____ (Name)
_____ (Company)
_____ (Address)
_____ (Address)
PHONE _____ FAX _____
EMAIL _____

_____Signature

_____Date

If you have questions, please contact Nicholas Read, Chief Procurement Officer at (617) 796-1220.

Form **W-9**
(Rev. October 2007)
Department of the Treasury
Internal Revenue Service

Request for Taxpayer Identification Number and Certification

Give form to the requester. Do not send to the IRS.

Print or type
See Specific Instructions on page 2.

Name (as shown on your income tax return)

Business name, if different from above

Check appropriate box: ☐ Individual/Sole proprietor ☐ Corporation ☐ Partnership
☐ Limited liability company. Enter the tax classification (D=disregarded entity, C=corporation, P=partnership) ▶
☐ Other (see instructions) ▶

X Exempt payee

Address (number, street, and apt. or suite no.)

Requester's name and address (optional)

City, state, and ZIP code

List account number(s) here (optional)

Part I Taxpayer Identification Number (TIN)

Enter your TIN in the appropriate box. The TIN provided must match the name given on Line 1 to avoid backup withholding. For individuals, this is your social security number (SSN). However, for a resident alien, sole proprietor, or disregarded entity, see the Part I instructions on page 3. For other entities, it is your employer identification number (EIN). If you do not have a number, see *How to get a TIN* on page 3.

Note. If the account is in more than one name, see the chart on page 4 for guidelines on whose number to enter.

Social security number

or

Employer identification number

Part II Certification

Under penalties of perjury, I certify that:

1. The number shown on this form is my correct taxpayer identification number (or I am waiting for a number to be issued to me), and
2. I am not subject to backup withholding because: (a) I am exempt from backup withholding, or (b) I have not been notified by the Internal Revenue Service (IRS) that I am subject to backup withholding as a result of a failure to report all interest or dividends, or (c) the IRS has notified me that I am no longer subject to backup withholding, and
3. I am a U.S. citizen or other U.S. person (defined below).

Certification instructions. You must cross out item 2 above if you have been notified by the IRS that you are currently subject to backup withholding because you have failed to report all interest and dividends on your tax return. For real estate transactions, item 2 does not apply. For mortgage interest paid, acquisition or abandonment of secured property, cancellation of debt, contributions to an individual retirement arrangement (IRA), and generally, payments other than interest and dividends, you are not required to sign the Certification, but you must provide your correct TIN. See the instructions on page 4.

Sign Here **Signature of U.S. person ▶** **Date ▶** Name

General Instructions

Section references are to the Internal Revenue Code unless otherwise noted.

Purpose of Form

A person who is required to file an information return with the IRS must obtain your correct taxpayer identification number (TIN) to report, for example, income paid to you, real estate transactions, mortgage interest you paid, acquisition or abandonment of secured property, cancellation of debt, or contributions you made to an IRA.

Use Form W-9 only if you are a U.S. person (including a resident alien), to provide your correct TIN to the person requesting it (the requester) and, when applicable, to:

1. Certify that the TIN you are giving is correct (or you are waiting for a number to be issued),

2. Certify that you are not subject to backup withholding, or

3. Claim exemption from backup withholding if you are a U.S. exempt payee. If applicable, you are also certifying that as a U.S. person, your allocable share of any partnership income from a U.S. trade or business is not subject to the withholding tax on foreign partners' share of effectively connected income.

Note. If a requester gives you a form other than Form W-9 to request your TIN, you must use the requester's form if it is substantially similar to this Form W-9.

Definition of a U.S. person. For federal tax purposes, you are considered a U.S. person if you are:

- An individual who is a U.S. citizen or U.S. resident alien,
- A partnership, corporation, company, or association created or organized in the United States or under the laws of the United States,
- An estate (other than a foreign estate), or
- A domestic trust (as defined in Regulations section 301.7701-7).

Special rules for partnerships. Partnerships that conduct a trade or business in the United States are generally required to pay a withholding tax on any foreign partners' share of income from such business. Further, in certain cases where a Form W-9 has not been received, a partnership is required to presume that a partner is a foreign person, and pay the withholding tax. Therefore, if you are a U.S. person that is a partner in a partnership conducting a trade or business in the United States, provide Form W-9 to the partnership to establish your U.S. status and avoid withholding on your share of partnership income.

The person who gives Form W-9 to the partnership for purposes of establishing its U.S. status and avoiding withholding on its allocable share of net income from the partnership conducting a trade or business in the United States is in the following cases:

- The U.S. owner of a disregarded entity and not the entity,

Cat. No. 10231X Form **W-9** (Rev. 10-2007)

CITY OF NEWTON, MASSACHUSETTS
PURCHASING DEPARTMENT
GENERAL TERMS AND CONDITIONS

1. The right is reserved to reject any and all bids, to waive minor informalities, and to make award as may be determined to be in the best interest of the City of Newton.

2. Prices quoted must include delivery to the City , as specified on the Work Order.

3. No charges will be allowed for packing, crating, freight, Express or cartage unless specifically stated and included in the bid.

4. The award to the successful bidder may be canceled if successful bidder shall fail to prosecute the work with promptness and diligence.

5. Time in connection with discount offered will be computed from the date of delivery to the City, as specified on Work Order, or from date correct invoice is received by the City, if the latter date is later than the date of delivery.

6. The sucessful bidder shall replace, repair or make good, without cost to the City, any defects or faults arising within one (1) year after date of acceptance of articles furnished hereunder (acceptance not to be unreasonably delayed) resulting from imperfect or defective work done or materials furnished by the Seller.

7. The Contractor shall indemnify and save harmless the City and all persons acting for on behalf of it from all suits and claims against them, or any of them, arising from or occasioned by the use of any material, equipment or apparatus, or any part thereof, which infringes or is alleged to infringe on any patent rights. In case such material, equipment or apparatus, or any part thereof, in any such suit is held to constitute infringement, the Contractor, within a reasonable time, will at it's expense, and as the City may elect, replace such material, equipment or apparatus with non-infringing material, equipment or apparatus, or remove the material, equipment or apparatus, and refund the sums paid therefor.

8. The successful bidder shall comply with all applicable Federal State and Local laws and regulations.

9. Purchases made by the City are exempt from Federal excise taxes and bid prices must exclude any such taxes. Tax exemption certificates will be furnished upon request.

10. If so stated in the Invitation For Bid the successful bidder will be required to furnish a performance and/or a labor and material payment bond, in an amount, in a form and with a surety satisfactory to the City. The bidder shall be responsible for the cost of the bond(s).

11. If the Invitation for Bids requires bid surety, this surety shall be in the form of a cash, bid bond, cahsier's check, treasurer's check, or certified check on a responsible bank, payable to the City of Newton, and must be filed with the original bid in the Office of the Purchasing Agent. Failure to do so will lead to rejection of bid. The bid surety will be returned to the sucessful bidder within seven (7) days execution of awarded, and approval by the City of performance and/or payment bond(s). The bid surety covers the City for damages when a bidder withdraws its bid after the bid submission date. Be advised that to the extent permitted by the law, the City will retain all bid deposits for withdrawn bids.

12. Verbal orders are not binding on the City and deliveries made or work done without formal Work Order or Contract are at the risk of the Contractor and may result in an unenforceable claim.

13. The Contractor shall agree to indemnify, defend and hold the City harmless from any and all claims arising out of the performance of this contract.

14. "Equal" - An item equal to that named or described in the specifications of the contract may be furnished by the Contractor and the naming of any commercial name, trademark or other identification shall not be construed to exclude any item or manufacturer not mentioned by name or as limiting competition but shall establish a standard of equality only. An item shall be considered equal to the item so named or described if (1) it is at least equal in quality, durability, appearance, strength and design; (2) it will perform at least equally the function imposed by the general design for the work being contracted for or the material being purchased; and (3) it conforms substantially, even with deviations, to the detailed requirements for the item in the specifications. The name and identification of all materials other than the one specifically named shall be submitted to the City in writing for approval, prior to purchase, use or fabrication of such items. Subject to the provisions of M.G.L., Ch. 30, Sec. 39J, approval shall be at the sole discretion of the City, shall be in writing to be effective, and the decision of the City shall be final. The City may require tests of all materials so submitted to establish quality standards at the Contractor's expense.

All directions, specifications and recommendations by manufacturers for installation, handling, storing, adjustment and operation of their equipment shall be complied with; responsibility for proper performance shall continue to rest with the Contractor.

For the use of material other than the one specified, the Contractor shall assume the cost of and responsibility for satisfactorily accomplishing all changes in the work as shown. If no manufacturer is named, the Contractor shall submit the product he intends to use for approval of the City.

Except as otherwise provided for by the provisions of M.G.L., Ch. 30, Sec. 39J, the Contractor shall not have any right of appeal from the decision of the City condemning any materials furnished if the Contractor fails to obtain the approval for substitution under this clause. If any substitution is more costly, the Contractor shall pay for such costs."

15. Notice is hereby given that the City of Newton Minority/Women Business Enterprise Plan dated December 1999 is applicable to all City of Newton contracts for materials and supplies. A copy of this plan may be obtained from the Purchasing Department.

16. Right To Know:

Any Contractor who receives an order or orders resulting from this invitation agrees to submit a Material Safety Data Sheet (MSDS) for each toxic or hazardous substance or mixture containing such substance, pursuant to M.G.L., Ch. 111F, SS8, 9 and 10 and the regulations contained in 441 CMR SS 21.06 when deliveries are made. The Contractor agrees to deliver all containers properly labeled pursuant to M.G.L. Ch. 111F, SS 7 and the regulations contained in 441 CMR SS 21.05. Failure to submit an MSDS and/or label on each container will place the Contractor in noncompliance with the work order. Failure to furnish MSDSs and/or labels on each container may result in civil or criminal penalties, including bid debarment and action to prevent the Contractor from selling said substances or mixtures containing said substances within the Commonwealth. All Contractors furnishing substances or mixtures subject to Chapter 111F of the M.G.L. are cautioned to obtain and read the law and rules and regulations referred to above. Copies can be obtained from the State House Book Store, Secretary of State, State House, Room 117, Boston, MA 02133, (617-727-2834) for $2.00 plus $.65 postage.

17. INSURANCE REQUIREMENTS

The Contractor shall provide insurance coverage as listed below. This insurance shall be provided at the Contractor's expense and shall be in full force and effect during the full term of this Contract.

WORKER'S COMPENSATION	
Worker's Compensation:	Per M.G.L. c.l49, §34 and c. l52 as amended.
COMMERCIAL GENERAL LIABILITY	
Personal Injury	$500,000 each occurrence $1,000,000 aggregate
Property Damage	$500,000 each occurrence $1,000,000 aggregate
VEHICLE LIABILITY	
Personal Injury	$500,000 each person $1,000,000 aggregate
Property Damage	$300,000 each occurrence $500,000 aggregrate

The City shall be named as additional insureds on the Contractor's Liability Policies.

The Contractor shall not commence the work until proof of compliance with this has been furnished to the City by submitting one copy of a properly endorsed insurance certificate issued by a company authorized to write insurance in the Commonwealth. This certificate shall indicate that the contractual liability coverage is in force. The Contractor shall file the original and one certified copy of all policies with the City within ten (10) days after contract award. If the City is damaged by the Contractor's failure to maintain such insurance and to so notify the City, then the Contractor shall be responsible for all reasonable costs attributable thereto.

Cancellation of any insurance required by this contract, whether by the insurer or the insured, shall not be valid unless written notice thereof is given by the party proposing cancellation to the other party and City at least thirty days prior to the effective date thereof, which shall be expressed in said notice.

FAILURE TO COMPLY WITH THESE TERMS AND CONDITIONS COULD RESULT IN THE CANCELLATION OF YOUR CONTRACT.

CONTRACT FORMS

The awarded bidder will be required to complete and submit documents substantially similar in form to the following.

These forms may need to be modified on account of changed circumstances, and are provided for informational purposes only.

CITY - CONTRACTOR AGREEMENT

CONTRACT NO. _____

THIS AGREEMENT made this _____ day of _____ in the year Two Thousand and Sixteen by and between the CITY OF NEWTON, a municipal corporation organized and existing under the laws of the Commonwealth of Massachusetts, hereinafter referred to as the CITY, acting through its Chief Procurement Officer, but without personal liability to him, and

hereinafter referred to as the CONTRACTOR.

The parties hereto for the considerations hereinafter set forth agree as follows:

I. **SCOPE OF WORK.** The Contractor agrees to furnish and to deliver to the City at such times, at such place or places, in such manner, and in such quantities as the City may direct, and at the unit prices quoted in the Contractor's bid the following item or items:

Supply & Deliver: Cast Iron Catchbasin Frames, Grates, Manhole Frames, Covers & Rings

II. **CONTRACT DOCUMENTS.** The Contract Documents consist of the following documents which are either attached to this Agreement or are incorporated herein by reference:

a. This CITY-CONTRACTOR Agreement;

b. The City's Invitation For Bid #17-35 issued by the Purchasing Department;

c. The Project Manual for Supply & Deliver Cast Iron Catchbasin Frames, Grates, Manhole Frames, Covers and Rings including Specifications, and if included or referenced therein, any Standard Terms and Conditions, Special Conditions, Wage Rate Requirements, Wage Rate Schedule(s);

d. Addenda Number(s) _____;

e. The Bid Response of the CONTRACTOR submitted for this Project and accompanying documents and certifications;

f. Certificate(s) of Insurance and surety bond(s), if any, submitted by the CONTRACTOR in connection with this Project;

g. Duly authorized and executed Amendments, Change Orders or Work Orders issued by the CITY after execution of this CITY-CONTRACTOR Agreement.

This CITY-CONTRACTOR Agreement, together with the other documents enumerated in this Article, constitute the entire Agreement between the CITY and the CONTRACTOR. The CONTRACTOR represents that its bid was made without condition, qualification or reservation of any kind, except upon the written acknowledgement and consent of the CITY.

III. **PRIORITY OF DOCUMENTS.** In the event of inconsistency between the terms of this CITY -CONTRACTOR Agreement and the Project Manual, the terms of this Agreement shall prevail.

IV. **APPLICABLE STATUTES.** All applicable federal, state and local laws and regulations are incorporated herein by reference and the Contractor agrees to comply with same.

V. **CONTRACT TERM.** The term of this contract shall **extend from day of contract execution through for one year and may only be increased by 25% of the contract total, and then only in accordance with MG.L. c.30B, §13.**. The City reserves the right to terminate this contract prior to the expiration date in the event total expenditures reach the above stated contract total. It is further understood that in the event the term of this contract extends beyond June 30 in any calendar year, the City reserves the right to terminate the contract if funding for its continuance is not appropriated in the succeeding fiscal year commencing July 1.

VI. **QUANTITIES.** The quantities specified in the Project Manual are approximate and are based on previous consumption. It is specifically understood the City does not agree to purchase any specific quantity, and purchases will be made to cover actual requirements only. The City may increase or decrease the quantity of any item specified without change in price per unit of quantity as stated in the Contractor's Bid Response.

VII. **MATERIALS.** The Contractor agrees, unless otherwise specified, that all equipment, materials and supplies furnished under this contract are to be first quality, new and unused.

VIII. **AUTHORIZATION OF AND PAYMENT FOR WORK PERFORMED.** The execution of this contract does not constitute a notice to proceed or authorization to perform work or make deliveries. No work shall be commenced or deliveries made unless authorized by a written Work Order issued by the City specifying the equipment, materials or supplies to be delivered. The Contractor will be paid following completed delivery and acceptance of the equipment, materials or supplies ordered in accordance with the Contract. The City will use best efforts to pay within thirty (30) days of receipt of an invoice for the delivered equipment, materials or supplies or acceptance of same whichever date is later.

IX **CLAIMS FOR MATERIALS OR LABOR.** In the event any claims have been filed with the City for material or labor delivered or performed pursuant to this contract, the City shall be under no obligation to make any payment until such claims are adjusted to the satisfaction of the City. Any and all liens for supplies may be paid off by the City within twenty (20) days after the filing for record as provided by law of a notice of such liens, except where the claim on which the lien is filed is being litigated by the Contractor, and in such case the City may pay the amount of any final judgment or decree on any such claim. All money paid by the City in settlement of liens and claims as aforesaid, with the costs and expenses incurred by the City in connection therewith shall be charged to the Seller, bearing interest at the rate of six percent (6%) per annum, and be deducted from the next payment falling due the Seller under the terms of this contract.

X. **UNIT PRICES.** It is agreed that the unit prices listed are maximum prices and that the City shall be entitled to take advantage of any decreasing market conditions, decreases to be governed by the manufacturers' price listing as might be generally adopted in the trade, or by the same percentage that the Seller may reduce prices to others who purchase in similar quantities and under similar conditions.

XI. **RESPONSIBILITY FOR THE WORK/INDEMNIFICATION.** In the performance of any work, including the delivery of equipment, materials or supplies, pursuant to this Contract, the Contractor shall take all responsibility for the work, and shall take all precautions for preventing injuries to persons and property in or about the work and shall defend, indemnify and hold the City harmless from all loss, cost, damage or expense arising from injuries to persons or property in or about the work. The Contractor shall be responsible for any damage which may be caused by the failure or insufficiency of any temporary works. He shall effectively protect his work and shall be liable for all damage and loss by delay or otherwise caused by his neglect or failure so to do.

XII. **WARRANTY.** Except as may be otherwise provided in the Project Manual, the Contractor shall replace, repair or make good, without cost to the City, any defects or faults arising within one (1) year after date of acceptance of equipment, materials or supplies furnished hereunder (acceptance not to be unreasonably delayed) resulting from imperfect or defective work done or materials furnished by the Contractor.

XIII. **PATENT INDEMNIFICATION.** The Contractor agrees to assume the defense of and shall indemnify and save harmless the City and all persons acting for or on behalf of it from all suits and claims against them, or any of them, arising from or occasioned by the use of any material, equipment or apparatus, or any part thereof which infringes or is alleged to infringe on any patent rights. In case such material, equipment or apparatus, or any part thereof, in any such suit is held to constitute infringement, the Contractor, within a reasonable time, shall at its own expense, and as the City may elect, replace such material, equipment or apparatus with non-infringing material, equipment or apparatus, or remove the material, equipment, or apparatus and refund the sums paid therefor.

XIV. INSPECTION. For the purposes of inspection of the equipment, materials and supplies covered by this contract, the Contractor shall give the City free access to his works and furnish every facility for properly inspecting such equipment, materials and supplies, and shall furnish full information, whenever requested, relating thereto. Approval by any inspector of the City shall not relieve the Contractor from his obligation to comply in all respects with the contract.

XV. ASSIGNMENT/SUB-CONTRACTING. The Contractor agrees that he will not sell, assign or transfer this Contract or any part thereof or interest therein without the prior written consent of the City.

XVI. INSTALLATION. If any of the equipment, materials and supplies covered by this contract is to be installed by either the Contractor or the City, the Contractor shall, upon request of the City, furnish a competent employee to supervise the installation without expense to the City, unless otherwise provided herein. Such supervisor, or other employees furnished by the Contractor, shall be the agents of the Contractor and not of the City, and the Contractor hereby agrees to indemnify the City and hold it harmless from and against any and all loss, costs, damage, and expense sustained as the result of negligence or other conduct on the part of such supervisor or employee.

XVII. TERMINATION. The City of Newton may, by written notice of default to the Contractor, terminate the whole or any part of this Contract or any Shipping or Work Order issued pursuant thereto in any one of the following circumstances:

a. If the Contractor fails to make delivery of the equipment, goods or supplies or to perform the services within the time specified herein or any extension thereof;

b. If the Contractor fails to perform any of the other provisions of this contract or, if in the opinion of the City, Contractor so fails to make progress as to endanger performance of this contract in accordance with its terms, and in either of these two circumstances does not correct such failure within thirty (30) days (or such longer period as the City may authorize in writing) after receipt of notice from the City specifying such failure.

XVIII. GOVERNING LAW. This Contract shall be governed by and construed in accordance with the laws of the Commonwealth of Massachusetts.

XIX. SEVERABILITY. The provisions of this Contract are severable. If any section, paragraph, clause or provision of this Contract shall be finally adjudicated by a court of competent jurisdiction to be invalid, the remainder of this Contract shall be unaffected by such adjudication and all of the remaining provisions of this Contract shall remain in full force and effect as though such section, paragraph, clause or provision, or any part thereof so adjudicated to be invalid, had not been included herein, unless such remaining provisions, standing alone, are incomplete and incapable of being executed in accordance with the intent of the parties to this Contract.

XX. AMENDMENTS TO THIS CONTRACT. This Contract may not be amended except in writing executed in the same manner as this CITY-CONTRACTOR Agreement.

THIS SPACE LEFT BLANK INTENTIONALLY

IN WITNESS WHEREOF, the parties have caused this instrument to be executed under seal the day and year first above written.

CONTRACTOR

By_____

Print Name_____

Title_____

Date _____

Affix Corporate Seal Here

City funds are available in the following accounts:
27A401Y1-5530 - _____
26A401A-5530 - _____
28A401Z2-5530 - _____

I further certify that the Mayor, or his designee, is authorized to execute contracts and approve change orders.

By_____
Comptroller of Accounts

Date_____

CITY OF NEWTON

By_____
Chief Procurement Officer

Date_____

By_____
Commissioner of Public Works

Date_____

Approved as to Legal Form and Character

By_____
Associate City Solicitor

Date_____

CONTRACT APPROVED

By_____
Mayor *or his designee*

Date_____

CERTIFICATE OF AUTHORITY - CORPORATE

1. I hereby certify that I am the Clerk/Secretary of _____
(insert full name of Corporation)

2. corporation, and that _____
(insert the name of officer who signed the **contract and bonds**.)

3. is the duly elected _____
(insert the title of the officer in line 2)

4. of said corporation, and that on _____
(insert a date that is ***ON OR BEFORE*** the date the officer signed the **contract and bonds**.)

at a duly authorized meeting of the Board of Directors of said corporation, at which all the directors were present or waived notice, it was voted that

5. _____ the _____
(insert **name** from line 2) (insert **title** from line 3)

of this corporation be and hereby is authorized to execute contracts and bonds in the name and on behalf of said corporation, and affix its Corporate Seal thereto, and such execution of any contract of obligation in this corporation's name and on its behalf, with or without the Corporate Seal, shall be valid and binding upon this corporation; and that the above vote has not been amended or rescinded and remains in full force and effect as of the date set forth below.

6. ATTEST: _____
(Signature of **Clerk or Secretary**)*

AFFIX CORPORATE SEAL HERE

7. Name: _____
(Please print or type name in line 6)*

8. Date: _____
(insert a date that is ***ON OR AFTER*** the date the officer signed the **contract and bonds**.)

* The name and signature inserted in lines 6 & 7 must be that of the Clerk or Secretary of the corporation.

CERTIFICATION OF TAX COMPLIANCE

Pursuant to M.G.L. c.62C, §49A and requirements of the City, the undersigned acting on behalf of the Contractor certifies under the penalties of perjury that the Contractor is in compliance with all laws of the Commonwealth relating to taxes including payment of all local taxes, fees, assessments, betterments and any other local or municipal charges (unless the Contractor has a pending abatement application or has entered into a payment agreement with the entity to which such charges were owed), reporting of employees and contractors, and withholding and remitting child support.*

_____
**Signature of Individual (Mandatory)

_____
*** Contractor's Social Security Number (Voluntary) or Federal Identification Number

Print Name: _____

Date: _____

OR

_____
Company Name
(Corporation, Partnership, LLC, etc.)

By: _____
**Corporate Officer (Mandatory)

Print Name: _____

Date: _____

* The provision in this Certification relating to child support applies only when the Contractor is an individual.

** Approval of a contract or other agreement will not be granted until the City receives a signed copy of this Certification.

*** Your social security number may be furnished to the Massachusetts Department of Revenue to determine whether you have met tax filing or tax payment obligations. Providers who fail to correct their non-filing or delinquency will not have a contract or other agreement issued, renewed, or extended.

DEPARTMENT OF PUBLIC WORKS
UTILITIES DIVISION

SPECIFICATIONS

Materials

MANHOLE FRAME AND COVER
CATCHBASIN FRAME AND GRATE
DOUBLE CATCH BASIN FRAME AND GRATES

All castings shall be of first quality gray cast iron having an ultimate tensile strength of not less than twenty thousand (20,000) pounds per square inch, to which may be added steel to the amount of twenty (20) percent. Castings shall be of such character and weight as to make sound, strong, tough, durable castings of even grain and shall be free from cracks, scales, lumps, blisters, air or sand holes, or other flaws or defects such as welding, burning in, plugging or excessive shrinkage. All castings shall be machined to insure good fit and to prevent rocking. Specimen bars shall be furnished for testing purposes if required. The design and construction of all street casting shall be such to safely insure their ability to support traffic. The minimum load being considered as one rear wheel of a 20-ton truck or roller transmitting a dead load of seven (7) tons, plus thirty (30) percent impact, uniformly distributed on any cover or grating.

All covers shall be solid of flat design, each provided with four (4) one-half (1/2) inch hole for ventilation, with the word "Water" or "Drain" cast in the cover. The word "Sewer" shall be cast on manhole covers. Covers and frames shall weigh not less than four hundred eighty (480) pounds. They shall conform to the specifications shown on the construction details. **Sewer manhole covers shall not be provided with vent holes.**

Catch basin frames and grates shall conform to this specification except that the minimum weight of frame and grate shall be four hundred eighty (480) pounds and they shall also conform to the specifications shown on the construction details.

Double catch basin frame and grate shall conform to this specification and construction detail except that the minimum weight of frame and grates shall be nine hundred (900) pounds.

EXTENSION RINGS

Extension rings and frames shall be made of hot rolled steel meeting or exceeding ASTM 36 HR Steel. The extension rings shall be painted with a low gloss air dried, black dipped rust inhibitor. All surfaces of the extension rings shall be clean of intrusions of slag. All welding shall meet American Welding Society specifications.

The extension rings must be adjustable to fit the City standard manhole frame and cover. A satisfactory fit should have a gap of 1/16" or 1/8" between extension ring and cover three hundred sixty (360) degrees around. The extension ring shall become dislodged by traffic once tightened in place and repaving has been done.

a.) Extension rings and frames shall be made of hot rolled steel meeting or exceeding ASTM 36 H. R. Steel. The extension rings and frames shall be painted with a low gloss air-dried, black-dipped rust inhibitor. All surfaces of the extension rings and frames shall be clean of inclusions or slag. All welding shall meet American Welding Society specifications.

b.) The extension rings and frames must be adjustable to fit the City standard manhole ring and catch basin frame. A satisfactory fit should have a gap of 1/16" to 1/8" between ring and cover or frame and grate at all points of circumference or perimeter. The extension ring or frame shall not become dislodged by traffic once tightened in place and repaving has been done.

END OF SECTION

SPECIAL INSTRUCTIONS, TERM CONTRACTS

The term of the contract will **extend for twelve (12) months from day of contract execution**. Material will be ordered on an as needed basis during the contract term.

The term of this contract will extend from day of contract execution through twelve (12) months. It is understood that in the event the term of this contract or any renewal option exercised extends beyond June 30 in any calendar year, the City reserves the right to terminate the contract if funding for its continuance is not appropriated in the succeeding fiscal year commencing July 1.

Quantities shown on the bid form are estimates only of the City's requirements during the contract term. The City may purchase any, all, or none of the quantity specified or may increase the quantity specified in accordance with its actual requirements. The dollar value of the contract may, with bidder's consent, be increased by an amount not to exceed twenty five percent (25%) of the contract total.

Bids must remain firm thoughout the contract term. No increase in the unit price bid once accepted and awarded will be permitted. No substitution for the brand/model bid once accepted and awarded will be permitted without prior written approval of the City.

Bidders will upon request provide a sample of any item quoted herein, at no charge to the City, within five (5) working days of notification. Failure to provide samples will be grounds for rejection of the bid.

The City will attempt to order material in reasonable lots, however the minimum acceptable order shall be one each of the unit of measure shown on the bid form.

Prices shall be net, FOB destination and include delivery, freight allowed to such locations within the City of Newton as directed when orders are placed. Cash, trade and quantity discounts must be calculated in the prices quoted.

Delivery of items ordered will be required within five (5) working days after receipt of order.

END OF SECTION

Double Catch basin Grate and Frame

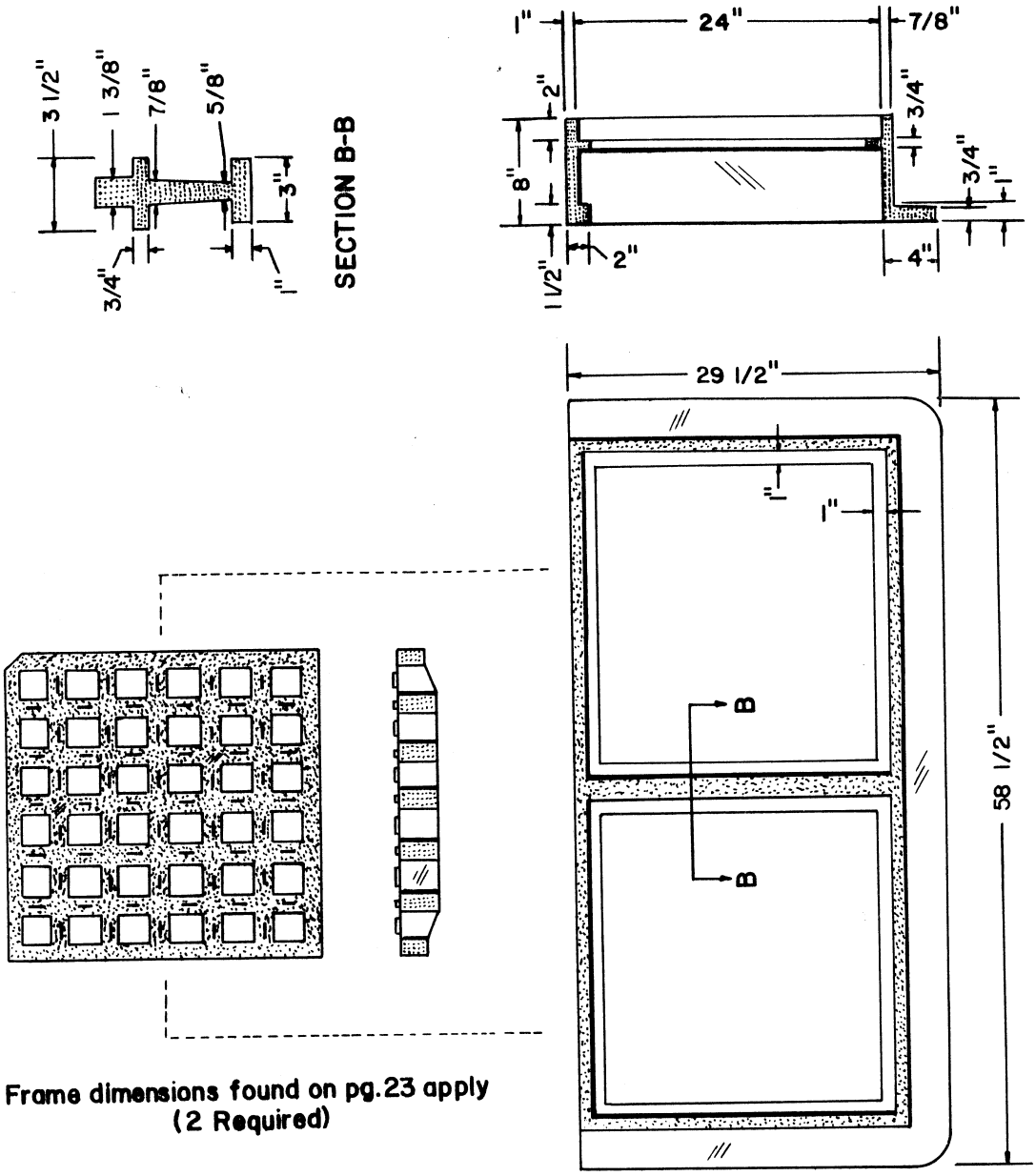

Frame dimensions found on pg.23 apply
(2 Required)

Minimum weight of grates and frame - 900 pounds

Single Catchbasin Grate and Frames

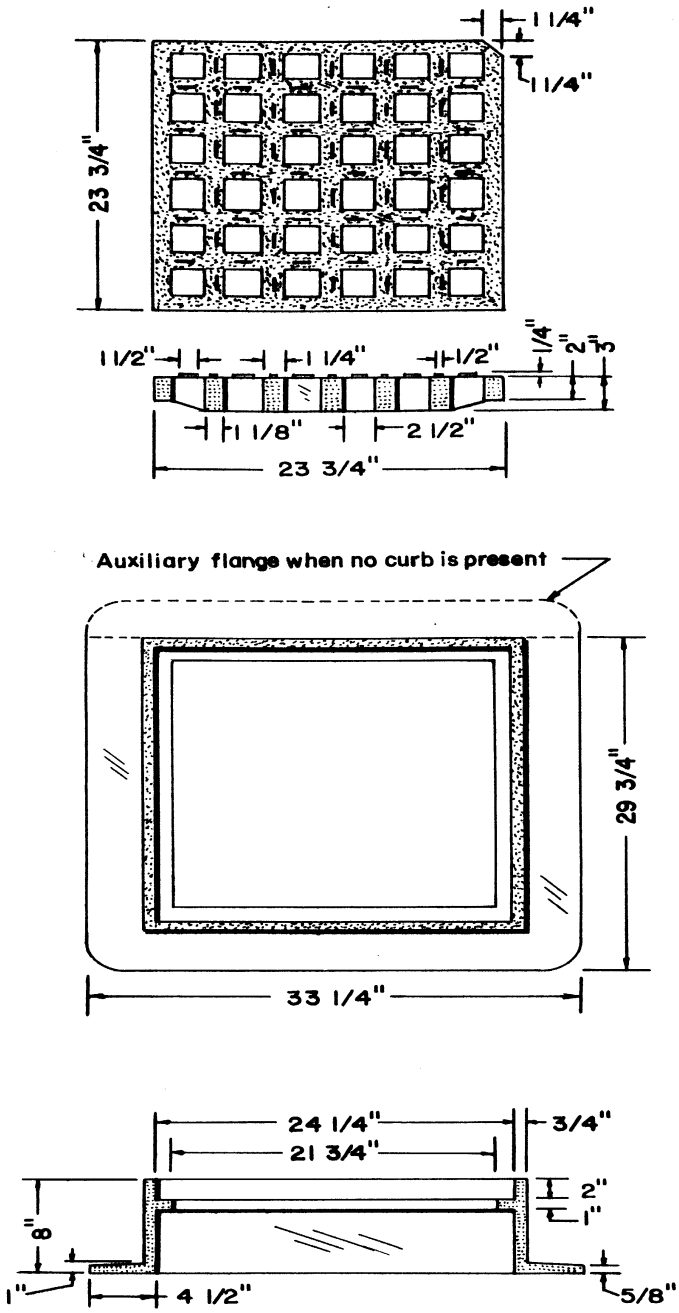

Minimum weight of Grate and Frame - 480 pounds.

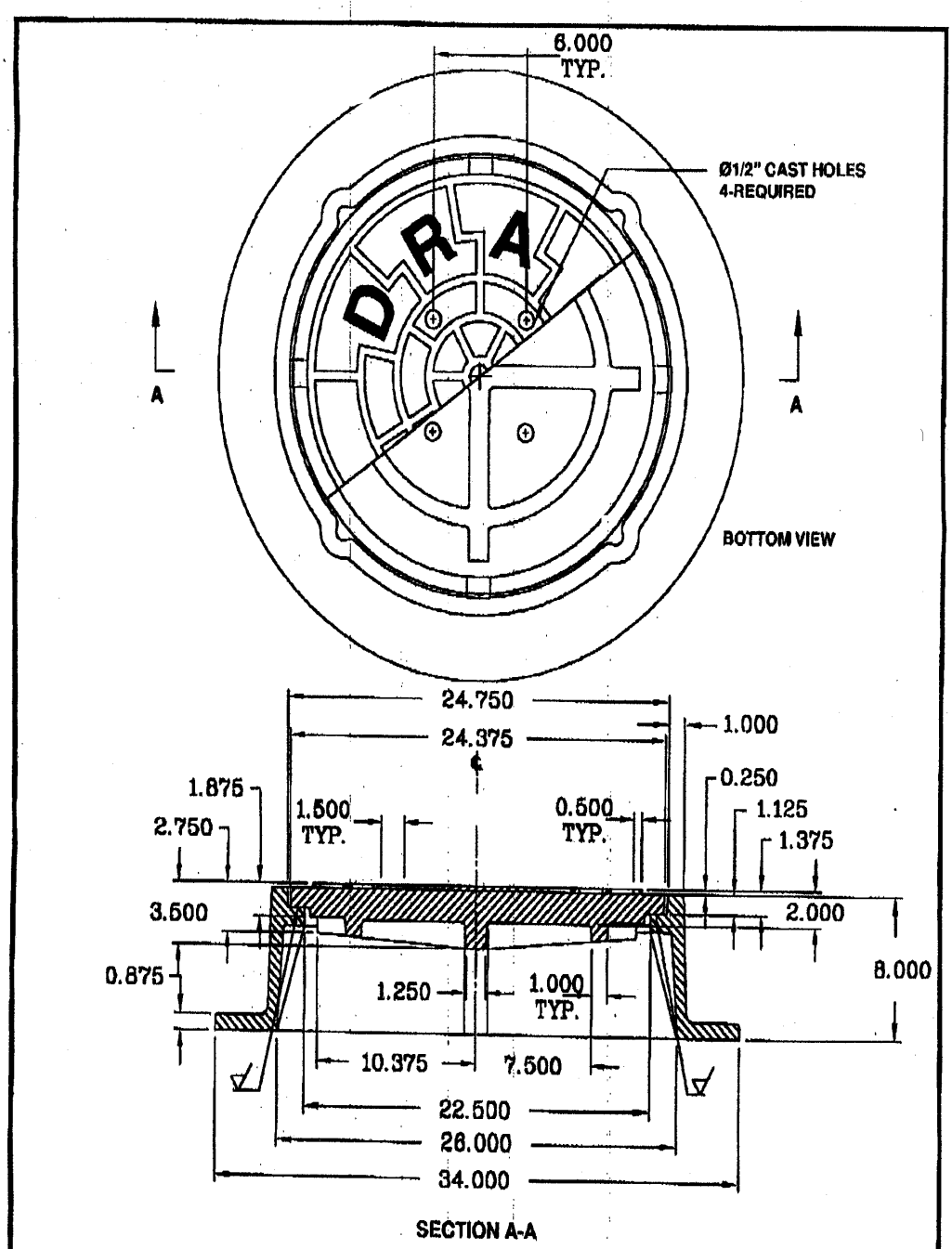

CLASSIFICATION: A.S.T.M. A-48 CLASS 30 GRAY IRON AS OF 9-1-89 CASTINGS FURNISHED WITH NO BLACK ASPHALT COATING	DESCRIPTION: 25" X 8" NEWTON MANHOLE RING AND COVER	TOL: ±	REV:
		CK:	DR:
		WT LBS: 498 APP.	
	SCALE: 1 1/2":1'-0"	DATE:	DR NO:

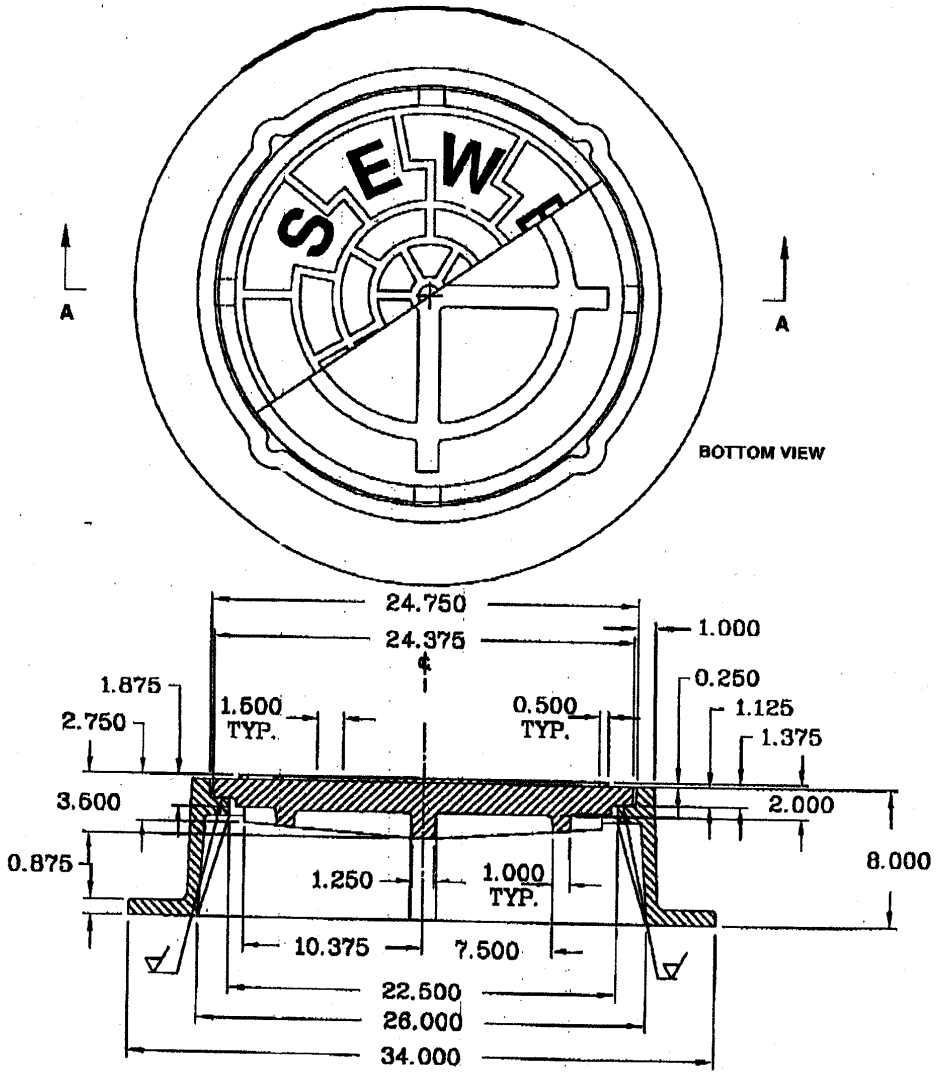

CLASSIFICATION: A.S.T.M. A-48 CLASS 30 GRAY IRON AS OF 9-1-89 CASTINGS FURNISHED WITH NO BLACK ASPHALT COATING	DESCRIPTION: 25" X 8" NEWTON MANHOLE RING AND COVER	TOL: ±	REV:
		CK:	
	PAT NOS:	WT LBS: 498 APP.	
	SCALE: 1 1/2":1'-0" DATE:	DR NO:	

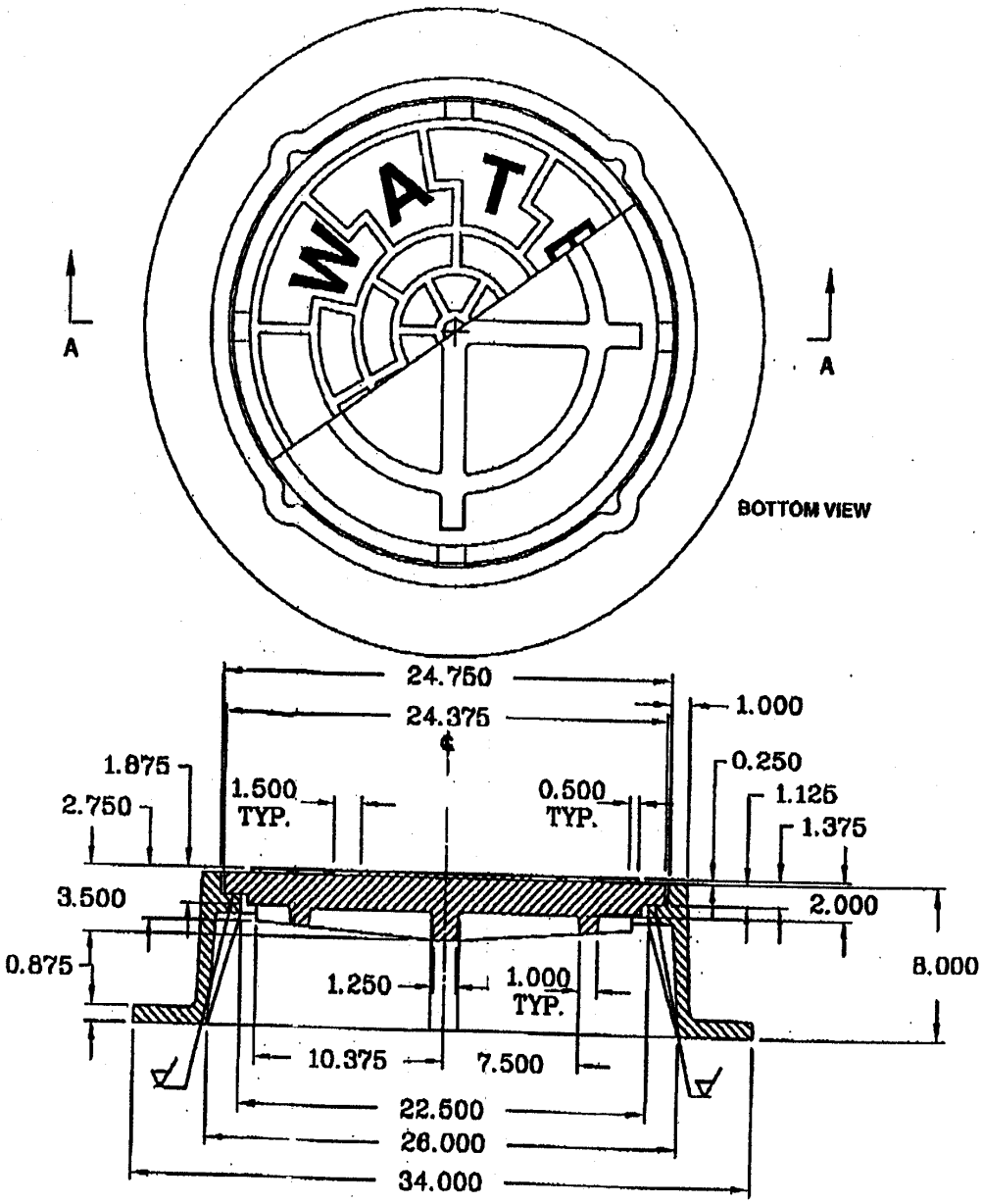

CLASSIFICATION: A.S.T.M. A-48 CLASS 30 GRAY IRON AS OF 9-1-89 CASTINGS FURNISHED WITH NO ____ BLACK ASPHALT COATING	DESCRIPTION: 25" X 8" NEWTON MANHOLE RING AND COVER	TOL:	REV:
		CK:	
		WT LBS: 498 APP.	
	SCALE: 1 1/2":1'-0"	DR NO:	

WATERTIGHT MANHOLE FRAMES AND COVERS

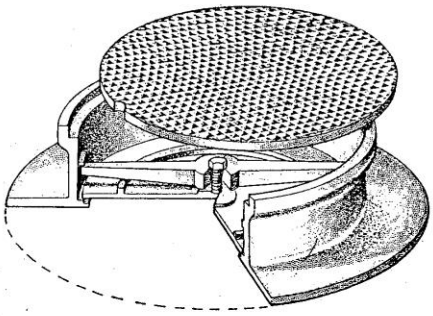

[redacted]

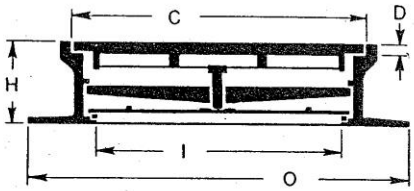

WATERTIGHT MANHOLE FRAMES AND COVERS

CAT. NO	C	H	D	I	O	WT.
LBW249	24	$8^{1/2}$	$1^{1/4}$	$20^{1/2}$	33	540