CITY OF NEWTON

PURCHASING DEPARTMENT

CONTRACT FOR PUBLIC WORKS DEPARTMENT
(M.G.L. Ch. 30, Sec. 39M)

PROJECT MANUAL:

2016 CITYWIDE SIDEWALK CONSTRUCTION

INVITATION FOR BID #16-107

Bid Opening Date: June 30, 2016 at 10:00 a.m.

JUNE 2016

Setti D. Warren, Mayor

CITY OF NEWTON

PROJECT MANUAL TABLE OF CONTENTS

2016 CITYWIDE SIDEWALK CONSTRUCTION

	Page #
Cover Page	1
Table of Contents	2
Part 1 - Bidding Documents, Contract Forms, and Conditions of the Contract	
1. - Invitation for Bid	3-4
2. - Instructions to Bidders	5-8
3. - Bid Form	9-11
4. - Bidder's Qualification Forms	
▪ Bidder's Qualifications and References Form	12-13
▪ Certificate of Non-Collusion	14
▪ Debarment Letter	15
▪ IRS Form W-9	16
5. - Contract Forms (Informational only. Not required at time of bid submittal)	
▪ Contractor Contract	18-19
▪ Certificate of Authority - Corporate	20
▪ Certification of Tax Compliance	21
▪ Payment Bond	22
6. - General Conditions of the Contract	23-31
7. - Wage Rate Requirements	32
▪ Prevailing Wages	33-67
▪ The Mass. Prevailing Wage Law	68
▪ Statement of Compliance	69
▪ Weekly Payroll Report Form	70
8. - Work	
▪ Trench Permit	71-75
▪ Item Sheets	76-81
Part 2 – General Requirements and Project Specifications	
Scope of Work	82-83
Base Maps	84-87
Special Provisions	88-112

END OF SECTION

CITY OF NEWTON

PURCHASING DEPARTMENT

INVITATION FOR BID #16-107

The City of Newton invites sealed bids in accordance with M.G.L. c.30, §39M from Contractors for:

2016 CITYWIDE SIDEWALK CONSTRUCTION

Bids will be received until: **10:00 a.m., Thursday, June 30, 2016**
at the Purchasing Department, Room 201, Newton City Hall, 1000 Commonwealth Avenue, Newton, MA 02459. Bids will not be accepted nor may submitted bids be corrected, modified or withdrawn after the deadline for bids. Immediately following the deadline for bids, all bids received within the time specified will be publicly opened and read aloud.

Only contractors prequalified by the Massachusetts Department of Transportation (MassDOT) are eligible to submit bids. MassDOT has provided a list of Prequalified Construction Contractors to the City of Newton. Bidders will be verified at time of Bid Opening.

The proposed project involves the construction and repair of various sections of sidewalk around the city of Newton, Massachusetts. The scope of new sidewalk and driveway apron construction measures approximately **2000 square yards**. The contractor shall also be asked to construct **75 new handicap ramps** and **remove 5 tree stumps**. All items shall be constructed per the City of Newton "General Construction Details" dated March 2003[1] and as directed by the Engineer.

PROPOSED CEMENT CONCRETE SIDEWALK AND DRIVEWAY APRON LOCATIONS

See attached diagrams for proposed Sidewalk Work Locations.

SPECIAL CONSIDERATIONS:

A. The project may require construction in areas occupied by business owners, employees and customers.
B. Contractor must accommodate customers visiting businesses adjacent to the work zone.
C. Pedestrian access and safety around the construction area is the responsibility of the Contractor.
D. Upon completion of the work the affected areas, including areas within the businesses disturbed during construction, shall be restored to original condition.
E. The contractor shall review all project limits with the Engineer prior to commencement of work.

This Invitation For Bids and all related documents and attachment (collectively, "Contract Documents") will be available online at: **www.newtonma.gov/bids** or pick up at the Purchasing Department after **10:00 A.M. on June 16, 2016. Bids must be submitted with one Original and one Copy.**

A bid deposit in an amount that is not less than five percent (5%) of the value of the bid, including all add alternates, is required. Bid deposits, payable to the City of Newton, shall be either in the form of a bid bond, or cash, or a certified check on, or a treasurer's or cashier's check issued by, a responsible bank or trust company. The City of Newton will award the contract to the lowest eligible and responsible bidder. Please Note: this bid, in accordance with the Chapter 303 Acts of 2008, contains Price Adjustments and new Prevailing Wage requirements. All bidders are required to familiarize themselves with these terms and conditions before submitting a bid.

Bidders are reminded that the bid deposit covers the City for damages when a bidder withdraws its bid after the bid submisssion date. **Be advised that to the extent permitted by the law the City will retain all bid deposits for withdrawn bids.**

The costs of any bond and any insurance required in this Invitation For Bid are the responsibility of the bidder; such costs will not be reimbursed by City and should be included in your bid.

It is anticipated work will start upon execution of contract, when a Notice to Proceed shall be issued.
Time for completion is five (5) months from the Notice to Proceed.

[1] The City of Newton "General Construction Details" dated March 2003 are available at the City's website http://www.newtonma.gov/civicax/filebank/documents/27369

All bids are subject to the provisions of M.G.L. Chapter 30, Section 39M. **Wages are subject** to minimum wage rates determined by the Massachusetts Department of Labor and Industries pursuant to M.G.L. Chapter 149, Sec. 26 to 27H. The schedule of wage rates applicable to this contract is included in the bidding documents. In addtion, the prevailing wage schedule will be updated annually for all public construction projects lasting longer than one (1) year. You will be required to pay the rates set out in any updated prevailing wage schedule. Increases in prevailing wage schedules will not be the basis for change order requests. The successful bidder will be required to provide a Certificate of Insurance demonstrating current coverage of the type and amounts set forth in the Project Manual**.** The successful bidder will be required to furnish a **Labor and Materials Payment Bond in the amount of 50%** of the contract total. Wages are paid to drivers for all "**on-site"** work.

Once you've downloaded this bid from the internet website **www.newtonma.gov/bids** I strongly suggest you email (purchasing@newtonma.gov) your company's Name, address, EMAIL, phone, fax AND the INVITATION FOR BID NUMBER and Project Title, so that we may add you to the Bidders List and you will be notified of any/all addendums.

The City will reject any and all bids in accordance with the above referenced General Laws. In addition, the City reserves the right to waive minor informalities in any or all bids, or to reject any or all bids (in whole or in part) if it be in the public interest to do so.

In the event that any person wishes to attend a bid opening or pre-bid meeting, accessible and reasonable accommodations will be provided to persons requiring assistance. If you need a reasonable accommodation, please contact the city of Newton's ADA Coordinator, Jini Fairley, at least two business days in advance of the meeting: jfairley@newtonma.gov or (617) 796-1253. For Telecommunications Relay Service, please dial 711.

CITY OF NEWTON

Nicholas Read
Chief Procurement Officert
June 16, 2016

CITY OF NEWTON

DEPARTMENT OF PURCHASING

INSTRUCTIONS TO BIDDERS

ARTICLE 1 - BIDDER'S REPRESENTATION

1.1 Each General Bidder (hereinafter called the "Bidder") by making a bid (hereinafter called "bid") represents that:

1. The Bidder has read and understands the Bidding Documents, Contract Forms, General Conditions, Conditions of the Contract, General Requirements and Project Specifications (collectively, referred to as the "Contract Documents") and the bid is made in accordance therewith.

2. The Bidder has visited the work site and is familiar with the local conditions under which the work has to be performed.

1.2 Failure to so examine the Contract Documents and work site will not relieve any Bidder from any obligation under the bid as submitted.

ARTICLE 2 - REQUEST FOR INTERPRETATION

2.1 Bidders shall promptly notify the City of any ambiguity, inconsistency, or error which they may discover upon examination of the Contract Documents, the site, and local conditions.

2.2 Bidders requiring clarification or interpretation of the Contract Documents shall make a written request to the *Chief Procurement Officer*, at purchasing@newtonma.gov or via facsimile (617) 796-1227. The City will only answer such requests if received by **Friday, June 24, 2016 at 12:00 noon**. In the event that the bid opening date is changed, the deadline for informational requests may also change as provided in an addendum issued by the City.

2.3 Interpretation, correction, or change in the Contract Documents will be made by addendum which will become part of the Contract Documents. The City will not be held accountable for any oral communication.

2.4 Addenda will be emailed to every individual or firm on record as having taken a set of Contract Documents. Addenda will be emailed to every individual or firm on record as having taken a set of Contract Documents. Receipt of all addenda issued must be acknowledged in the Bid Form. YOUR FAILURE TO ACKNOWLEDGE ALL ADDENDA MAY RESULT IN YOUR BID BEING REJECTED AS NON-RESPONSIVE.

2.5 Copies of addenda will be made available for inspection at the location listed in the Invitation for Bids where Contract Documents are on file, in addition to being available online at **www.newtonma.gov/bids**.

2.6 Bidders or proposers contacting ANY CITY EMPLOYEE regarding an Invitation for Bid (IFB) or a Request for Proposal (RFP), outside of the Purchasing Department, once an IFB or RFP has been released, may be disqualified from the procurement process.

2.7 Bidders downloading information off the internet web site are solely responsible for obtaining any addenda prior to the bid opening. If the bidder makes itself known to the Purchasing Department, at purchasing@newtonma.gov or via facsimile (617) 796-1227, it shall be placed on the bidder's list. Bidders must provide the Purchasing Department with their company's name, street address, city, state, zip, phone, fax, email address and **INVITATION FOR BID #16-107**.

ARTICLE 3 - MBE PARTICIPATION

3.1 Notice is hereby given that the Mayor's Affirmative Action Plan for the City of Newton in effect at the time of this solicitation is applicable to all construction contracts in excess of $10,000.00.

3.2 Notice is hereby given that the City of Newton Minority/Women Business Enterprise Plan and the Supplemental Equal Employment Opportunity Anti-Discrimination and Affirmative Action Program in effect at the time of this solicitation are applicable to all City contracts for goods and services in excess of $50,000.00.

3.3 Copies of the Plans and Program referred to in Sections 3.1 and 3.2 are available at: **www.newtonma.gov/purchasing**.

ARTICLE 4 - PREPARATION AND SUBMISSION OF BIDS

4.1 Bids shall be submitted on the "Bid Form" as appropriate, furnished by the City.

4.2 All entries on the Bid Form shall be made by typewriter or in ink.

4.3 Where so indicated on the Bid Form, sums shall be expressed in both words and figures. Where there is a discrepancy between the bid sum expressed in words and the bid sum expressed in figures, the words shall control.

4.4 Bid Deposits shall be submitted in the amount specified in the Invitation for Bids. They shall be made payable to the City and shall be either in the form of cash, certified check, treasurer's or cashier's check issued by a responsible bank or trust company, or a bid bond issued by a surety licensed to do business in the Commonwealth of Massachusetts; and shall be conditioned upon the faithful performance by the principal of the agreements contained in the bid. Bidders are reminded that the bid deposit covers the City for damages when a bidder withdraws its bid after the bid submisssion date. **Be advised that to the extent permitted by the law the City will retain all bid deposits for withdrawn bids.**

Bid deposits of the three (3) lowest responsible and eligible Bidders shall be retained until the execution and delivery of the City-Contractor agreement.

4.5 The Bid, including the bid deposit shall be enclosed in a sealed envelope with the following plainly marked on the outside:

* GENERAL BID FOR: **#16-107**

* NAME OF PROJECT: **2016 Citywide Sidewalk Construction**

* BIDDER'S NAME, BUSINESS ADDRESS, AND PHONE NUMBER

4.6 Date and time for receipt of bids is set forth in the Invitation for Bids.

4.7 Timely delivery of a bid at the location designated shall be the full responsibility of the Bidder. In the event that Newton City Hall is closed on the date or at the time that bids are due, the date and time for receipt of bids shall be on the next business day following that the Newton City Hall and the Purchasing Department are open.

4.8 Bids shall be submitted with one **original** and one **copy.**

4.9 Be advised that a new Massachusetts law has been enacted that required all employees who work on Massachusetts public works construction sites must have no less than 10 hours of OSHA-approved safety and health training. See Chapter 306 of the Acts of 2004, which became effective July 1, 2006.

1. This requirement will apply to any general bid or sub bid submitted.
2. This law directs the Massachusetts Attorney General to restrain the award of construction contracts to any contractor who is in violation to this requirement and to restrain the performance of these contracts by non-complying contractors.
3. The contractor and all subcontractors on this project will be required to provide certification of compliance with this requirement. Non-compliance with this law will disqualify you from bidding on public contracts.

ARTICLE 5 - ALTERNATES

5.1 Each Bidder shall acknowledge alternates (if any) in Section C on the Bid Form.

5.2 In the event an alternate does not involve a change in the amount of the base bid, the Bidder shall so indicated by writing "No Change", or "N/C" or "0" in the space provided for that alternate.

5.3 Bidders shall enter on the Bid Form a single amount for each alternate which shall consist of the amount for work performed by the Contractor.

5.4 The low Bidder will be determined on the basis of the sum of the base bid and the accepted alternates.

ARTICLE 6 - WITHDRAWAL OF BIDS

6.1 Any bid may be withdrawn prior to the time designated for receipt of bids on written or electronic request. Electronic withdrawal of bids must be confirmed over the Bidder's signature by written notice postmarked on or before the date and time set for receipt of bids.

6.2 Withdrawn bids may be resubmitted up to the time designated for the receipt of bids.

6.3 No bids may be withdrawn within sixty (60) days, Saturdays, Sundays and legal holidays excluded, after the opening of the bids.

ARTICLE 7 - CONTRACT AWARD

7.1 The City is soliciting prices for items set forth in the Item Sheets, attached hereto. It is the City's intent to award separate contracts for each item to the lowest, responsive and responsible bidder for each item. Accordingly, the City may award one (1) contract, or as many contracts as there are bidders. Contracts will be awarded within sixty (60) days, Saturdays, Sundays, and legal holidays excluded, after the opening of bids.

7.2 The City reserves the right to waive minor informalities in or to reject any or all Bids if it be in the public interest to do so.

7.3 The City reserves the right to reject any bidder who has failed to pay any local taxes, fees, assessments, betterments, or any other municipal charge, unless the bidder has a pending abatement application or has entered into a payment agreement with the collector-treasurer.

7.4 As used herein, the term "lowest responsible and eligible Bidder" shall mean the Bidder (1) whose bid is the lowest of those bidders possessing the skill, ability and integrity necessary for the faithful performance of the work; (2) who has met all the requirements of the invitation for bids; (3) who shall certify that he is able to furnish labor that can work in harmony with all other elements of labor employed or to be employed in the work; (4) who, where the provisions of section eight B of chapter twenty-nine apply, shall have been determined to be qualified thereunder.

7.5 Subsequent to the award and within five (5) days, Saturday, Sundays and legal holidays excluded, after the prescribed forms are presented for signature, the successful Bidder shall execute and deliver to the City a contract in the form included in the Contract Documents in such number of counterparts as the City may require.

7.6 In the event that the City receives low bids in identical amount from two or more responsive and responsible Bidders, the City shall select the successful Bidder by a blind selection process chosen by the City such as flipping a coin or drawing names from a hat. The low Bidders who are under consideration will be invited to attend and observe the selection process.

ARTICLE 8 - TAXES

8.1 The Bidder shall not include in this bid any tax imposed upon the sale or rental of tangible personal property in this Commonwealth, such as any and all building materials, supplies, services and equipment required to complete the work.

8.2 The City is exempt from payment of the Massachusetts Sales Tax, and the Bidder shall not include any sales tax on its bid. The City's exemption Number is E-046-001-404.

ARTICLE 9 – PROPRIETARY SPECIFICATIONS

9.1 The City may have used a proprietary specification to describe the supply for which is soliciting bids. Such specifications are permitted under M.G.L. c. 30B, §14, provided that the Chief Procurement Officer has prepared a written statement that no other manner of description suffices and the justification therefor.

9.2 The required determination and justification have been duly prepared, and a copy may be requested in accordance with the Massachusetts Public Records Law, M.G.L. c. 66, §10.

ARTICLE 10 – ENVIRONMENTALLY PREFERABLE PRODUCTS

10.1 The City encourages environmentally preferable products, i.e., products or services that have less negative or more positive effects on human health and the environment when compared with competing products or services that serve the same purpose. The city encourages bidders to describe, in the space provided on the Bid Form, the environmental attributes of its goods or services throughout the entire life-cycle, including manufacture, use and disposition. This information may include multiple environmental considerations such as natural resource use, recycled content, energy and water efficiency, greenhouse gas emissions, impact on climate change, packaging, hazardous material use, and health and safety impacts on workers, consumers and the community. If you do not currently assess such attributes, please indicate that. However you respond, the City will not take your information into account in evaluating bid proposals.

10.2 Bidders are encouraged also to provide information related to steps they take internally to (a) identify any positive or negative environmental attributes of products or services they offer, as specified above, and (b) insure that those attributes are being addressed as part of operations.

END OF SECTION

CITY OF NEWTON

DEPARTMENT OF PURCHASING

BID FORM #16-107

A. The undersigned proposes to supply and deliver the materials specified below in full accordance with the Contract Documents and Project Manual supplied by the City of Newton entitled:

2016 CITYWIDE SIDEWALK CONSTRUCTION

for the contract price specified below, subject to additions and deduction according to the terms of the specifications.

B. This bid includes addenda number(s) _____, _____, _____, _____,

C. The Contractor shall insert prices for each item in ink, in both words and figures.

_____Dollars and $_____

(*Contract price shall equal the Total Bid from Item Sheets at pp. 76-81 below.)*

COMPANY NAME: _____

D. The undersigned has completed and submits herewith the following documents:

- o Bidder's Qualifications and References Form, 2 pages
- o Certificate of Non-Collusion, 1 page
- o Debarment Letter, 1 page
- o IRS Form W-9, 1 page
- o Signed Bid Form, 2 pages
- o Item Sheets, 6 pages
- o A five percent (5%) bid deposit.
- O Trench Permit issued pursuant to G.L. c. 82A §1 and 520 CMR 7.00 et seq.(as amended)

E. Prompt Payment Discounts. Bidders are encouraged to offer discounts in exchange for an expedited payment. Payments may be issued earlier than the general goal of within 30 days of receipt of the invoice only when in exchange for discounted prices. Discounts will not be considered in determining the lowest responsible bidder.

Prompt Payment Discount _____%_____Days
Prompt Payment Discount_____%_____ Days
Prompt Payment Discount _____%_____Days

F. The undersigned agrees that, if selected as general contractor, s/he will within five days, Saturdays, Sundays and legal holidays excluded, after presentation thereof by the City of Newton, execute a contract in accordance with the terms of this bid **and furnish a labor and materials payment bond** of a surety company qualified to do business under the laws of the commonwealth and satisfactory to the City of Newton in the **sum not less than 50% of the contract price**, the premiums for which are to be paid by the contractor and are included in the contract price.

The undersigned hereby certifies that s/he is able to furnish labor that can work in harmony with all other elements of labor employed or to be employed on the work and that s/he will comply fully with all laws and regulations applicable to awards made subject to section forty-four A of M.G.L. Chapter 30, s 39M.

The undersigned certifies that he is able to furnish labor that can work in harmony with all other elements of labor employed or to be employed in the work; (2) that all employees to be employed at the worksite will have successfully completed a course in construction safety and health approved by the United States Occupational Safety and Health Administration ("OSHA") that is at least 10 hours in duration at the time the employee begins work and who shall furnish documentation of successful completion of said course with the first certified payroll report for each employee; and (3) that all employees to be employed in the work subject to this bid have successfully completed a course in construction safety and health approved by the United States OSHA that is at least 10 hours in duration. The undersigned understands that any employee found on a worksite subject to this section without documentation of successful completion of a course in construction safety and health approved by the United States Occupational Safety and Health Administration that is at least 10 hours in duration shall be subject to immediate removal.

The undersigned further certifies under the penalties of perjury that this bid is in all respects bona fide, fair and made without collusion or fraud with any other person. As used in this subsection the word "person" shall mean any natural person, joint venture, partnership, corporation or other business or legal entity. The undersigned further certifies under penalty of perjury that the said undersigned is not presently debarred from doing public construction work in the Commonwealth under the provisions of section twenty-nine F of chapter twenty-nine, or any other applicable debarment provisions of any other chapter of the General Laws or any rule or regulation promulgated thereunder.

The undersigned further certifies under the penalties of perjury that they have familiarized themselves with the changes to the Prevailing Wage Rates, Price Adjustment Clauses, in accordance to Chapter 303 Acts of 2008.

G. Environmentally preferable products information (which is requested but which will not be considered in awarding a contract):

Description of environmental attributes of Bidder's goods or services:

Steps taken to (a) identify any positive or negative environmental attributes of products or services and (b) insure that those attributes are being addressed as part of operations:

Date _____

_____
(Name of General Bidder)

BY: _____

_____
(Printed Name and Title of Signatory)

_____
(Business Address)

_____
(City, State Zip)

_____ / _____
(Telephone) (FAX)

_____
(E-mail address)

NOTE: If the bidder is a corporation, indicate state of incorporation under signature, and affix corporate seal; if a partnership, give full names and residential addresses of all partners; if an individual, give residential address if different from business address; and, if operating as a d/b/a give full legal identity. Attach additional pages as necessary.

END OF SECTION

CITY OF NEWTON

BIDDER'S QUALIFICATIONS AND REFERENCES FORM

All questions must be answered, and the data given must be clear and comprehensive. Please type or print legibly. If necessary, add additional sheet for starred items. This information will be utilized by the City of Newton for purposes of determining bidder responsiveness and responsibility with regard to the requirements and specifications of the Contract.

1. FIRM NAME: _____

2. WHEN ORGANIZED: _____

3 INCORPORATED? _____ YES _____ NO DATE AND STATE OF INCORPORATION: _____

4. IS YOUR BUSINESS A **MBE**? _____YES _____NO **WBE**? _____YES _____NO or **MWBE**? _____YES _____NO

* 5. LIST ALL CONTRACTS CURRENTLY ON HAND, SHOWING CONTRACT AMOUNT AND ANTICIPATED DATE OFCOMPLETION:

_____
_____
_____
_____
_____

* 6. HAVE YOU EVER FAILED TO COMPLETE A CONTRACT AWARDED TO YOU?
_____ YES _____ NO
IF YES, WHERE AND WHY?

_____
_____

* 7. HAVE YOU EVER DEFAULTED ON A CONTRACT? _____ YES _____ NO
IF YES, PROVIDE DETAILS.

_____
_____

* 8. LIST YOUR VEHICLES/EQUIPMENT AVAILABLE FOR THIS CONTRACT:

_____
_____
_____
_____
_____
_____
_____

* 9. IN THE SPACES FOLLOWING, PROVIDE INFORMATION REGARDING CONTRACTS COMPLETED BY YOUR FIRM SIMILAR IN NATURE TO THE PROJECT BEING BID. A MINIMUM OF FOUR (4) CONTRACTS SHALL BE LISTED. PUBLICLY BID CONTRACTS ARE PREFERRED, BUT NOT MANDATORY.

PROJECT NAME: _____
OWNER: _____
CITY/STATE: _____

DOLLAR AMOUNT: $ _____ DATE COMPLETED: _____
PUBLICLY BID? _____YES _____ NO
TYPE OF WORK?: _____
CONTACT PERSON: _____ TELEPHONE #: ____)_____
CONTACT PERSON'S RELATION TO PROJECT?: _____
(i.e., contract manager, purchasing agent, etc.)

PROJECT NAME: _____
OWNER: _____
CITY/STATE: _____
DOLLAR AMOUNT: $ _____ DATE COMPLETED: _____
PUBLICLY BID? _____YES _____ NO
TYPE OF WORK?: _____
CONTACT PERSON: _____ TELEPHONE #: (____)_____
CONTACT PERSON'S RELATION TO PROJECT?: _____
(i.e., contract manager, purchasing agent, etc.)

PROJECT NAME: _____
OWNER: _____
CITY/STATE: _____
DOLLAR AMOUNT: $ _____ DATE COMPLETED: _____
PUBLICLY BID? _____YES _____ NO
TYPE OF WORK?: _____
CONTACT PERSON:_____ TELEPHONE #: (____)_____
CONTACT PERSON'S RELATION TO PROJECT?:_____
(i.e., contract manager, purchasing agent, etc.)

PROJECT NAME: _____
OWNER: _____
CITY/STATE: _____
DOLLAR AMOUNT: $ _____ DATE COMPLETED: _____
PUBLICLY BID? _____YES _____ NO
TYPE OF WORK?: _____
CONTACT PERSON: _____ TELEPHONE #:(____)_____
CONTACT PERSON'S RELATION TO PROJECT?: _____
(i.e., contract manager, purchasing agent, etc.)

10. The undersigned certifies that the information contained herein is complete and accurate and hereby authorizes and requests any person, firm, or corporation to furnish any information requested by the City of Newton in verification of the recitals comprising this statement of Bidder's qualifications and experience.

DATE: _____ BIDDER: _____

SIGNATURE: _____

PRINTED NAME: _____ TITLE: _____

END OF SECTION

CERTIFICATE OF NON-COLLUSION

The undersigned certifies under penalties of perjury that this bid or proposal has been made and submitted in good faith and submitted in good faith and without collusion or fraud with any other person. As used in this certification, the word "person" shall mean any natural person, business, partnership, corporation, union, committee club, or other organization, entity, or group or individuals.

_____
(Signature of individual)

_____
Name of Business

City of Newton

Purchasing Department
Nicholas Read ⊛ *Chief Procurement Officer*
1000 Commonwealth Avenue
Newton Centre, MA 02459-1449
purchasing@newtonma.gov

Telephone
(617) 796-1220
Fax:
(617) 796-1227
TDD/TTY
(617) 796-1089

Mayor
Setti D. Warren

Date

Vendor

Re: Debarment Letter for Invitation For Bid #16-107

As a potential vendor on the above contract, the City requires that you provide a debarment/suspension certification indicating that you are in compliance with the below Federal Executive Order. Certification can be done by completing and signing this form.

Debarment:

Federal Executive Order (E.O.) 12549 "Debarment and Suspension" requires that all contractors receiving individual awards, using federal funds, and all sub-recipients certify that the organization and its principals are not debarred, suspended, proposed for debarment, declared ineligible, or voluntarily excluded by any Federal department or agency from doing business with the Federal Government.

I hereby certify under pains and penalties of perjury that neither I nor any principal(s) of the Company identified below is presently debarred, suspended, proposed for debarment, declared ineligible, or voluntarily excluded from participation in this transaction by any federal department or agency.

_____ (Name)
_____ (Company)
_ _____ (Address)
_____ (Address)
PHONE _____ FAX _____
EMAIL _____

_____Signature

_____Date

.

If you have questions, please contact Nicholas Read, Chief Procurement Officer at (617) 796-1220.

Form **W-9**
(Rev. October 2007)
Department of the Treasury
Internal Revenue Service

Request for Taxpayer Identification Number and Certification

Give form to the requester. Do not send to the IRS.

Print or type
See Specific Instructions on page 2.

Name (as shown on your income tax return)

Business name, if different from above

Check appropriate box: ☐ Individual/Sole proprietor ☐ Corporation ☐ Partnership
☐ Limited liability company. Enter the tax classification (D=disregarded entity, C=corporation, P=partnership) ▶
☐ Other (see instructions) ▶

X Exempt payee

Address (number, street, and apt. or suite no.)

Requester's name and address (optional)

City, state, and ZIP code

List account number(s) here (optional)

Part I Taxpayer Identification Number (TIN)

Enter your TIN in the appropriate box. The TIN provided must match the name given on Line 1 to avoid backup withholding. For individuals, this is your social security number (SSN). However, for a resident alien, sole proprietor, or disregarded entity, see the Part I instructions on page 3. For other entities, it is your employer identification number (EIN). If you do not have a number, see *How to get a TIN* on page 3.

Note. If the account is in more than one name, see the chart on page 4 for guidelines on whose number to enter.

Social security number

or

Employer identification number

Part II Certification

Under penalties of perjury, I certify that:

1. The number shown on this form is my correct taxpayer identification number (or I am waiting for a number to be issued to me), and
2. I am not subject to backup withholding because: (a) I am exempt from backup withholding, or (b) I have not been notified by the Internal Revenue Service (IRS) that I am subject to backup withholding as a result of a failure to report all interest or dividends, or (c) the IRS has notified me that I am no longer subject to backup withholding, and
3. I am a U.S. citizen or other U.S. person (defined below).

Certification instructions. You must cross out item 2 above if you have been notified by the IRS that you are currently subject to backup withholding because you have failed to report all interest and dividends on your tax return. For real estate transactions, item 2 does not apply. For mortgage interest paid, acquisition or abandonment of secured property, cancellation of debt, contributions to an individual retirement arrangement (IRA), and generally, payments other than interest and dividends, you are not required to sign the Certification, but you must provide your correct TIN. See the instructions on page 4.

Sign Here **Signature of U.S. person ▶** **Date ▶** Name

General Instructions

Section references are to the Internal Revenue Code unless otherwise noted.

Purpose of Form

A person who is required to file an information return with the IRS must obtain your correct taxpayer identification number (TIN) to report, for example, income paid to you, real estate transactions, mortgage interest you paid, acquisition or abandonment of secured property, cancellation of debt, or contributions you made to an IRA.

Use Form W-9 only if you are a U.S. person (including a resident alien), to provide your correct TIN to the person requesting it (the requester) and, when applicable, to:

1. Certify that the TIN you are giving is correct (or you are waiting for a number to be issued),

2. Certify that you are not subject to backup withholding, or

3. Claim exemption from backup withholding if you are a U.S. exempt payee. If applicable, you are also certifying that as a U.S. person, your allocable share of any partnership income from a U.S. trade or business is not subject to the withholding tax on foreign partners' share of effectively connected income.

Note. If a requester gives you a form other than Form W-9 to request your TIN, you must use the requester's form if it is substantially similar to this Form W-9.

Definition of a U.S. person. For federal tax purposes, you are considered a U.S. person if you are:

- An individual who is a U.S. citizen or U.S. resident alien,
- A partnership, corporation, company, or association created or organized in the United States or under the laws of the United States,
- An estate (other than a foreign estate), or
- A domestic trust (as defined in Regulations section 301.7701-7).

Special rules for partnerships. Partnerships that conduct a trade or business in the United States are generally required to pay a withholding tax on any foreign partners' share of income from such business. Further, in certain cases where a Form W-9 has not been received, a partnership is required to presume that a partner is a foreign person, and pay the withholding tax. Therefore, if you are a U.S. person that is a partner in a partnership conducting a trade or business in the United States, provide Form W-9 to the partnership to establish your U.S. status and avoid withholding on your share of partnership income.

The person who gives Form W-9 to the partnership for purposes of establishing its U.S. status and avoiding withholding on its allocable share of net income from the partnership conducting a trade or business in the United States is in the following cases:

- The U.S. owner of a disregarded entity and not the entity,

Cat. No. 10231X Form **W-9** (Rev. 10-2007)

CONTRACT FORMS

The awarded bidder will be required to complete and submit documents substantially similar in form to the following.

These forms may need to be modified on account of changed circumstances, and are provided for informational purposes only.

CITY - CONTRACTOR AGREEMENT

CONTRACT NO. C -

THIS AGREEMENT made this ___ day of _____ in the year Two Thousand and Sixteen by and between the CITY OF NEWTON, a municipal corporation organized and existing under the laws of the Commonwealth of Massachusetts, hereinafter referred to as the CITY, acting through its Chief Procurement Officer, but without personal liability to him, and hereinafter referred to as the CONTRACTOR.

The parties hereto for the considerations hereinafter set forth agree as follows:

ARTICLE 1. **STATEMENT OF WORK.** The Contractor shall furnish all labor, materials, and equipment and perform all work required in strict accordance with the Contract Documents for the following project:

2016 CITYWIDE SIDEWALK CONSTRUCTION

ARTICLE 2. **TIME OF COMPLETION.** The Contractor shall commence work under this Contract on the date specified in the written notice of the City to proceed and shall fully complete all work hereunder within the time specified in the Summary of Work and Specific Work Requirements of the Project Manual. Time is of the essence with regard to this contract, and all work specified **shall be completed within five months** of the Contractor's receipt of a Notice to Proceed**.** Failure to complete within the time specified shall be subject to the assessment of liquidated damages in accordance with the provisions contained in the Project Manual.

ARTICLE 3. **THE CONTRACT PRICE.** The City shall pay the Contractor for the full and satisfactory performance of the Contract, in current funds a sum not to exceed:

ARTICLE 4. **CONTRACT DOCUMENTS.** The Contract Documents consist of the following documents which are either attached to this Agreement or are incorporated herein by reference:

a. This CITY-CONTRACTOR Agreement;

b. The City's Invitation For Bid #16-107 issued by the Purchasing Department;

c. The Project Manual for: **2016 CITYWIDE SIDEWALK CONSTRUCTION** including the Instructions to Bidders; General Conditions; Special Conditions; MWBE/AA Requirements, Wage Rate Requirements and Wage Rate Schedule(s) including any updated prevailing wage rate schedules if applicable; The Supplementary Special Conditions; General Requirements and Project Specifications; and Drawings, if included or referenced therein;

d. Addenda Number(s)_____;

e. The Bid Response of the CONTRACTOR submitted for this Project and accompanying documents and certifications;

f. Certificate(s) of Insurance and surety bond(s) submitted by the CONTRACTOR in connection with this Project;

g. Duly authorized and executed Amendments, Change Orders or Work Orders issued by the CITY after execution of this CITY-CONTRACTOR Agreement.

This CITY-CONTRACTOR Agreement, together with the other documents enumerated in this Article, constitute the entire Agreement between the CITY and the CONTRACTOR.

ARTICLE 5. **ALTERNATES.** The following Alternates have been accepted and their costs are included in the Contract Price stated in Article 3 of this Agreement:

Alternates: N/A

ARTICLE 6. **APPLICABLE STATUTES.** All applicable federal, state and local laws and regulations are incorporated herein by reference and the Contractor agrees to comply with same.

IN WITNESS WHEREOF, the parties have caused this instrument to be executed under seal the day and year first above written.

CONTRACTOR

By_____

Print Name_____

Title _____

Date_____

Affix Corporate Seal Here

Certified that City funds are available in the following account number:
0140105A-52409

I further certify that the Mayor, or his designee, is authorized to execute contracts and approve change orders.

By_____
Comptroller of Accounts

Date_____

CITY OF NEWTON

By_____
Chief Procurement Officer

Date _____

By _____
Commissioner of Public Works

Date _____

Approved as to Legal Form and Character

By_____
Associate City Solicitor

Date _____

CONTRACT & BONDS ARE APPROVED

By_____
Mayor or his designee

Date_____

CERTIFICATE OF AUTHORITY - CORPORATE

1. I hereby certify that I am the Clerk/Secretary of _____
(insert full name of Corporation)

2. corporation, and that _____
(insert the name of officer who signed the **contract and bonds**.)

3. is the duly elected _____
(insert the title of the officer in line 2)

4. of said corporation, and that on _____
(insert a date that is ***ON OR BEFORE*** the date the officer signed the **contract and bonds**.)

at a duly authorized meeting of the Board of Directors of said corporation, at which all the directors were present or waived notice, it was voted that

5. _____ the _____
(insert **name** from line 2) (insert **title** from line 3)

of this corporation be and hereby is authorized to execute contracts and bonds in the name and on behalf of said corporation, and affix its Corporate Seal thereto, and such execution of any contract of obligation in this corporation's name and on its behalf, with or without the Corporate Seal, shall be valid and binding upon this corporation; and that the above vote has not been amended or rescinded and remains in full force and effect as of the date set forth below.

6. ATTEST: _____ *AFFIX CORPORATE SEAL HERE*
(Signature of **Clerk or Secretary**)*

7. Name: _____
(Please print or type name in line 6)*

8. Date: _____
(insert a date that is ***ON OR AFTER*** the date the officer signed the **contract and bonds**.)

* The name and signature inserted in lines 6 & 7 **must** be that of the **Clerk or Secretary** of the corporation.

CERTIFICATION OF TAX COMPLIANCE

Pursuant to M.G.L. c.62C, §49A and requirements of the City, the undersigned acting on behalf of the Contractor certifies under the penalties of perjury that the Contractor is in compliance with all laws of the Commonwealth relating to taxes including payment of all local taxes, fees, assessments, betterments and any other local or municipal charges (unless the Contractor has a pending abatement application or has entered into a payment agreement with the entity to which such charges were owed), reporting of employees and contractors, and withholding and remitting child support.*

_____
**Signature of Individual (Mandatory)

_____
*** Contractor's Social Security Number (Voluntary) or Federal Identification Number

Print Name: _____

Date: _____

OR

_____
Company Name
(Corporation, Partnership, LLC, etc.)

By: _____
**Corporate Officer (Mandatory)

Print Name: _____

Date: _____

* The provision in this Certification relating to child support applies only when the Contractor is an individual.

** Approval of a contract or other agreement will not be granted until the City receives a signed copy of this Certification.

*** Your social security number may be furnished to the Massachusetts Department of Revenue to determine whether you have met tax filing or tax payment obligations. Providers who fail to correct their non-filing or delinquency will not have a contract or other agreement issued, renewed, or extended.

CITY OF NEWTON, MASSACHUSETTS

PAYMENT BOND

Know All Men By These Presents:

That we, _____, as PRINCIPAL, and _____, as SURETY, are held and firmly bound unto the City of Newton as Obligee, in the sum of _____dollars **($_____)** to be paid to the Obligee, for which payments well and truly to be made, we bind ourselves, our respective heirs, executors, administrators, successors and assigns, jointly and severally, firmly by these presents.

Whereas, the said PRINCIPAL has made a contract with the Obligee, bearing the date of _____ _, 2016 for the construction of _____ in Newton, Massachusetts.
(Project Title)

Now, the conditions of this obligation are such that if the PRINCIPAL and all Sub-contractors under said contract shall pay for all labor performed or furnished and for all materials used or employed in said contract and in any and all duly authorized modifications, alterations, extensions of time, changes or additions to said contract that may hereafter be made, notice to the SURETY of such modifications, alterations, extensions of time, changes or additions being hereby waived, the foregoing to include any other purposes or items set out in, and to be subject to, provisions of M.G.L. c. 30, sec. 39A, and M.G.L. c. 149 sec. 29, as amended, then this obligation shall become null and void; otherwise it shall remain in full force, virtue and effect.

In Witness Whereof, the PRINCIPAL and SURETY have hereto set their hands and seals this ___day of____, 2016.

PRINCIPAL	SURETY
_____	_____
BY_____	BY _____
(SEAL)	(ATTORNEY-IN-FACT) (SEAL)
_____ (Title)	
ATTEST: _____	ATTEST: _____

CITY OF NEWTON

GENERAL CONDITIONS OF THE CONTRACT

FOR PUBLIC WORKS CONSTRUCTION

ARTICLE 1

Definitions

The word "Commissioner" shall mean the official duly authorized to act for the City of Newton in the execution of the work of this contract, acting directly or through properly authorized agents.

The word "Engineer," or "City Engineer," shall mean the City Engineer of the City of Newton, acting directly or through properly authorized agents, such agents acting within the scope of the particular duties entrusted to them.

The word "Contractor" shall mean the party or parties contracting to perform the work covered by this contract or his, or their, legal representatives, successors or assigns.

The word "Plans" shall mean plans, and all related drawings, diagrams, profiles and specifications referred to and included in the Project Manual for this contract.

The word "City" shall mean the City of Newton.

The word “Project” shall mean the services which are the subject of the Contract Documents.

The words “Subcontract” and Subcontractor” shall refer to project contracts between the Contractor and a subcontractor, and the subcontractor thereunder.

The term “Substantial Completion” shall mean either that the work required by the contract has been completed except for the work having a contract price of less than one per cent of the then adjusted contract price, or substantially all of the work has been completed and opened to public use except for minor incomplete or unsatisfactory work items that do not materially impair the usefulness of the work required by the contract.

ARTICLE 2
Plans, Drawings, Profiles

1.The work shall be done in accordance with Plans referred to in Article 1 and such further working and detail plans, drawings and profiles as may be furnished from time to time by the Engineer. All said plans, general and detail, are to be deemed a part of this contract, and the said Plans, specifications and contract are to be considered together, so that any work mentioned in the contract, though not shown on the Plans, and any work shown on the Plans though not mentioned in the contract, is to be provided by the Contractor as a part of this contract. Figured dimensions are to prevail over scale. All things which in the opinion of the Engineer may fairly be inferred from the contract, Plans and specifications, are to be executed by the Contractor as a part of the contract; and the Engineer shall be sole judge as to whether detail plans, drawings and profiles conform to the Plans and the contract.

Discrepancy in Plans

2.The Contractor shall carefully examine all said Plans, profiles, drawings, specifications and orders; all figures, dimensions, lines, marks and scales thereof, and all directions of the Commissioner and the Engineer relating to the work, and conform to those in relation to which there is no doubt or discrepancy, but at once submit all cases of doubt or discrepancy to the Engineer for adjustment. Anything done on any part of the work for which special information or drawing should be procured, unless done in accordance with such information or drawing, or anything done in relation to which there is doubt or discrepancy, except in accordance with the adjustment thereof, or done in violation of law or public authority, is to be redone if the Commissioner shall so direct.

ARTICLE 3
Inspection

The Contractor in carrying on the contract shall conform to all determinations and directions of the Engineer relating to the proper interpretation of the Plans, , the fitness of persons employed on the work or the number thereof, or the suitableness, amount, quality, and value of anything done or any materials used, and the Contractor shall permit the Commissioner and/or the Engineer and/or persons designated by them to enter upon the work and inspect the same at all times and in all places, and shall provide safe and convenient facilities for making such entry and inspection.

ARTICLE 4
Change in Plans and Work

The City, acting through the Commissioner and upon his written order only, from time to time given to the Contractor or his foreman, may change, increase or take away any part of the work, or change the specifications, Plans, drawings, form or materials thereof. Any deduction or addition thereto is to be allowed, or paid for at a price to be determined, within not more than 15 days of the completion of the change, by the City Engineer acting in the same capacity as an architect in a building contract as between City and Contractor. Any demand for addition or deduction must be made in writing to the City Engineer within seven (7) days of the time change was ordered.

ARTICLE 5
Time and Manner of Doing the Work

1. The Contractor shall begin work upon receipt of written Notice to Proceed. Once begun the work shall be carried out in a continuous and uninterrupted fashion with sufficient workforce and resources to assure completion by the date for completion established by the Contract Documents.

2. The Contractor shall carry on the work in accordance with the requirements of law and of all other public authorities, and to the satisfaction of the Commissioner; he shall give all notices, take out all permits, pay all charges and fees, give personal supervision to the work and keep thereon a competent foreman and sufficient employees, skilled in the several parts which are given them to do.

Maintenance of Travel

3. As applicable, the Contractor shall conduct his work so as to interfere as little as possible with public travel, and shall give property owners proper means of access to their property where existing access has been cut off by the work. The Contractor shall keep the streets open for through travel except where, in the opinion of the Commissioner, it is necessary to close the street. The continuous length of the street occupied for the work shall be kept as short as possible, and no part of the work shall be unnecessarily delayed. Wherever the Commissioner shall direct, trenches shall be bridged by the Contractor in a proper and secure manner so as not to interrupt travel. Free access shall be maintained at all times to all water gates, gas gates, and fire hydrants.

Abandonment of Work by Contractor

4. In the event the City Engineer certifies to the Commissioner that the work is not being so carried forward or if the Contractor at any time is not carrying on the work to the satisfaction of the Commissioner, or is not observing any of the provisions of the contract, or has abandoned the work, or become insolvent or assigned his property, the City, acting by the Commissioner and at his discretion, may, with or without notice to the Contractor, or advertising for doing the work, and by contract, day labor or otherwise, do any part of the work which the Contractor has failed to do or replace any part not done to the satisfaction of the Commissioner, or take possession of the work and complete the same, and in doing so may use any implements, machinery or materials on or about the work which are the property of the Contractor, charging the Contractor any excess cost for completing the work, which excess cost the Contractor agrees to pay.

ARTICLE 6
Compensation for Work

1. Subject to the provisions of Paragraph 10 of this Article, the price named in the proposal and accepted by the City shall be paid by the City and received by the Contractor as full compensation for furnishing materials and for use of tools, forms, machinery and other implements, and for labor in moving materials and executing all the work contemplated in this contract, also for loss or damage arising from delay however occasioned, or out of the nature of the work aforesaid or from the action of the elements, from floods, or from any unforeseen obstructions or difficulties which may be encountered in the prosecution of the same and for all risks of every description connected with the work and for well and faithfully completing the work in the proper manner and according to the plans and specifications and requirements of the Commissioner under them.

2. During the first week of each calendar month, the City Engineer shall cause all work done by the Contractor during the previous month to be measured and shall estimate the value thereof and, on or before the 10th of each month issue a certificate to the Commissioner of the measurements and the amount due the Contractor according to the terms of his contract.

3. The City shall pay the Contractor on approval of the Commissioner monthly on or before the 18th of each month for all work done during the preceding month according to the aforementioned certificate of the City Engineer, less 5 per cent of the amount of such work and less any amounts due the City by the Contractor.

Final and Substantial Completion

4.Upon substantial completion of the work required by the Contract, the Contractor must present to the City Engineer written certification that the work is substantially complete. Within 21 calendar days after such certification is presented, the City Engineer shall present to the Contractor either a written declaration that the work is substantially complete or an itemized list of incomplete or unsatisfactory work items sufficient to demonstrate that the work is not substantially complete. The City Engineer shall include with such itemized list a date by which the work items must be completed, which date may not be earlier than the date for substantial completion established in the Contract Documents. If the City Engineer does not respond as provided herein within 21 calendar days, then the date of the Contractor's certification shall become the date for effective declaration of substantial completion.

5. Within 15 calendar days after the effective declaration of substantial completion, the City Engineer shall send to the Contractor by certified mail, return receipt requested, a complete list of all incomplete or unsatisfactory work items. Unless delayed by causes beyond the Contractor's control, with an extension of time granted pursuant to Article 8, the Contractor must complete the work items within 45 calendar days after receipt of the list, or by the contractual completion date, whichever is later. If the contractor fails to complete the work within the required time the City may, notwithstanding other rights and remedies at its disposal, and upon seven days written notice to the Contractor terminate the contract and complete the incomplete or unsatisfactory work items and charge the cost of same to the Contractor.

6. Within 65 calendar days following the effective declaration of substantial completion, the City Engineer shall issue to the Commissioner who shall cause to be paid to the Contractor a substantial completion estimate which estimate shall consist of the balance of the then current contract price less a one percent retention, the estimated cost to complete incomplete or unsatisfactory work items, the value of any outstanding claims against the Contractor and the sum of all demands for direct payment made pursuant to Article 12 herein, provided that until final acceptance, the City shall retain five percent of the value of all items planted in the ground.

7. The Contractor shall provide written notice to the City Engineer when the work has been brought to final completion. Within ten days following receipt of such notice, and providing his inspection shows no work items remain incomplete or unsatisfactory, the City Engineer shall issue to the Commissioner a final certificate of the total amount of work done and the money due the Contractor therefor, crediting thereon the amounts of the previous payments. In making the final certificate, the City Engineer shall not be bound by any preceding certificate or estimate of the amount of work done or materials furnished.

8. Within 30 calendar days following receipt of final completion, the City shall pay the Contractor, on the approval of the Commissioner, the percentages retained and the balance due the Contractor according to the aforementioned final certificate of the City Engineer less any indebtedness of the Contractor for incomplete or unsatisfactory work or claims made by or against the City. If a claim or claims are made, or notice of liability given, such amounts due the Contractor may be paid upon satisfaction of such claims or upon furnishing of indemnity to said City against all loss, cost, damage or expense by reason of such claims.

9. The City, on making any payment after the completion of the work, shall be released from all claim or liability to the Contractor for anything done or used, or for any loss or injury sustained in carrying on the contract, or for any act, omission, neglect or mistake of the City or any person relating to or affecting the contract, except for the balance of any sum retained as aforesaid.

Extra Work

10. The Contractor shall be paid for any additions, or deductions as provided in Article 4, paragraph 1, and for extra labor done by, and for extra materials furnished by him in compliance with the written order only of the Commissioner, calling for work not similar in character to that covered by the items given in the proposal, and for which no price is set in the said written order, the direct (not including consequential) cost to the Contractor, as determined to be reasonable by the Commissioner, plus fifteen per cent of said costs as so determined in regard to labor only. For teams or trucks so furnished, no payment shall be made to the Contractor beyond the current local rate as determined by the Commissioner in each case. The direct cost of labor may include the cost of mechanics and laborers furnished and a reasonable proportion of the time of the foreman and timekeeper, but it shall in no case include any charge for the use of tools, for establishment charges or for time spent by the Contractor. The actual cost of insurance on extra pay rolls and of materials furnished for extra work, shall be paid without any addition. The labor and materials so ordered shall constitute a part of the work to be done under the contract; and all and singular the provisions of the contract shall apply to said labor and materials as if the same were specified therein. The Contractor shall have no claim for the above mentioned extra labor and materials unless he furnishes the details and bills therefor within one week after doing any such labor or furnishing any such materials.

11. No claim of the Contractor against the City under this contract shall be deemed valid unless such claim is presented to the Commissioner within ten days from the time when the Contractor first knows of, or has opportunity to know of, the acts and circumstances on which such claim is based.

12. A payment or payments to the Contractor, in cases where these provisions or any of them, are not complied with, shall not be construed as a waiver of said provisions or any part thereof.

Contract Made Subject to Appropriations

13. This contract is made subject to appropriation heretofore made and shall not be altered unless the Contractor, the sureties on the bond, if any, the officer making the contract and the Mayor shall in writing agree thereto.

ARTICLE 7

Liquidated Damages

1. In case the work embraced in the contract shall not have been substantially completed by the date(s) stipulated therein, the Contractor shall pay to the City of Newton as liquidated damages a designated sum per calendar day for the entire period of overrun until the work is substantially completed in accordance with the following Schedule of Deductions and, in addition, the Contractor shall pay without reimbursement the entire cost of all traffic officers, railroad flagmen, inspectors, or other personnel the City Engineer and/or the Chief Engineer of the railroad determines to be necessary during the period of overrun of time.

SCHEDULE OF DEDUCTIONS

Original Contract Amount From More Than	To and Including	Daily Charge Per Calendar Day
$ 0.	$ 25,000.	$ 30.
25,000.	50,000.	50.
50,000.	100,000.	100.
500,000.	1,000,000.	150.
1,000,000.	2,000,000.	200.
2,000,000.	___	300.

2. In case the work covered by the contract shall not have been brought to final completion within 45 calendar days following the date of declaration of substantial completion, the Contractor shall pay to the City of Newton as liquidated damages the sum of $150.00 for each week or portion thereof during the period of overrun until the work is complete.

3. Whatever sum of money may become due and payable to the City of Newton by the Contractor under this Article may be retained out of money belonging or owed to the Contractor in the hands and possession of or by the City of Newton. It is agreed that this Article shall be construed and treated by the parties to the contract not as imposing a penalty upon said Contractor for failing fully to complete said work as agreed on or before the time specified in the proposal, but as liquidated damages to compensate said City of Newton for all additional costs incurred by it because of the failure of the Contractor fully to complete said work on or before the date of completion specified in the proposal.

ARTICLE 8
Delays and Extensions of Time

1. If the Contractor is delayed at any time in the progress of the work by an act or neglect of the City, or by changes in the work ordered by the City, or by unseasonably inclement weather, or by other causes deemed by the City Engineer to be beyond the Contractor's control, and which the City Engineer determines may justify delay, then the time for completion may be extended for such reasonable time as the City Engineer may determine.

2. No such extension of time will be allowed unless the Contractor submits a written request for an extension to the City Engineer no later than 10 calendar days of the start of the occurrence or event giving rise thereto. Each such request must describe the occurrence or event and specify the manner and extent that such occurrence or event is causing or has caused a delay in the work. The City Engineer shall promptly investigate each request and make his written determination to the Commissioner and the Contractor within 10 days after receipt of the request. In his determination the City Engineer may either grant, deny, or modify the length of the requested extension.

3. If the City Engineer's determination so warrants, the Commissioner shall authorize a written Change Order to the Contract extending the time for completion. No extension of time shall be deemed as granted until said Change Order has been duly executed by the parties.

4. Change Orders which may be executed by the City and the Contractor in connection with additions, extra labor and/or extra materials shall not be considered as allowing extensions of the time for completion unless the change order expressly specifies that additional time is allowed in connection with the work under the change order. Once a Change Order has been executed by the parties, any request by the Contractor for an extension of time based solely on the fact that additions, extra labor and/or extra materials are required by the Change Order will be denied by the City Engineer.

5. Permitting the Contractor to continue and finish the work or any part of it after the times fixed for its completion, or after the date to which the time for completion may have been extended, shall in no way operate as a waiver on the part of the City of Newton of any of its rights under the contract. The Contractor remains liable for damages caused other than by delay.

ARTICLE 9
Lines and Grades

The Contractor shall retain a Registered Land Surveyor who shall furnish such boards and stakes and cause to be placed thereon, such lines, marks and directions relating to the work as the Commissioner or City Engineer shall from time to time direct.

ARTICLE 10
Public Service Pipes and Conduits

1. The Contractor shall maintain such pipes or conduits of public service corporations or of the City as are across or within the lines of the work until such time as said public service corporations or the City assume the maintenance or removal of said pipes or conduits. The Commissioner will notify such public service corporations to that effect on the existence of such obstructions to the work being brought to his notice by the Contractor. The City will relocate either temporarily or permanently all water mains and water service pipes, or hydrants, and drains or sewers which may interfere with the work contemplated in this contract. (This clause is not to be construed as applying to such pipes as may be readily supported and protected during the progress of the work.) The cost of shutting off and turning on water in water mains during blasting shall be assumed by the City.

Protection of Existing Structures

2. All existing gas pipes, water pipes, sewers, drains, conduits, or other structures which are uncovered by the excavation shall be carefully supported and protected from injury by the Contractor, and, in case of injury, they shall be restored by him, without compensation therefor, to as good condition as that in which they were found, and shall be kept in repair until 6 months after the completion of the work. The Contractor shall provide suitable temporary channels for water at all water courses. Wherever the work passes under or adjacent to street railway tracks, the Contractor shall make all necessary arrangements with the railway company for doing any work which may affect the property of the company or interfere with the operating of the railway, and he shall be liable for any damage that may be caused by any act, omission or neglect on his part, and shall pay all expenses of every kind incidental to this work.

Changing the Location of Existing Structures

3. Whenever it becomes necessary to change the location of any water or gas pipes, sewers, drains, conduits or other structures not otherwise provided for in these specifications, the Contractor shall do the whole or such portions of the work of making such changes as the Commissioner may require, and shall receive in payment therefor the reasonable cost of the work done as determined by the Commissioner plus 15 per cent of such cost. In estimating such cost, no allowance shall be made to the Contractor for the use of tools not especially provided for this work, for general superintendence, or for any overhead expenses except liability insurance.

ARTICLE 11
Co-operation with Other Contractors

The Contractor shall conduct the work in such manner as not to interfere with other work being done by the City, by contract or otherwise, and if deemed necessary by the Commissioner, the work under this contract shall conform to the progress of said other work; shall co-operate with other contractors or employees who may be doing work for the City, and with public service corporations affected by the work, in arranging for storage places, connections, bracings, temporary support for structures, repairs, etc.

ARTICLE 12
Subcontracts

1. The Contractor, in any contract with a Subcontractor, shall provide that the Subcontractor shall be subject to all specifications, terms, provisions, conditions, requirements and liabilities set forth in this contract so far as such specifications, terms, provisions, conditions, requirements and liabilities are applicable to the work to be done under such Subcontract, and shall also provide that such Subcontract shall be terminated by the Contractor whenever the Commissioner shall certify to him in writing that in his opinion the work of the Subcontractor is unnecessarily or unreasonably delayed or that the Subcontractor has violated any of the provisions of this contract. The Contractor shall at once terminate such subcontract if the Commissioner, after certifying as aforesaid, shall in writing direct the Contractor to make such termination.

2. Subcontracts shall be made in writing and the Contractor shall furnish the Commissioner with a copy of all Subcontracts on demand.

3. Pursuant to the provisions of M.G.L. Ch. 30, Sec. 39F (1), the following provisions are included in the General Conditions:

(a) Forthwith after the Contractor receives payment on account of a periodic estimate, the Contractor shall pay to each Subcontractor the amount paid for the labor performed and the materials furnished by that Subcontractor, less any amount specified in any court proceedings barring such payment and also less any amount claimed due from the Subcontractor by the Contractor.

(b) Not later than the sixty-fifth day after each Subcontractor substantially completes his work in accordance with the plans and specifications, the entire balance due under the Subcontract less amounts retained by the City as the estimated cost of completing the incomplete and unsatisfactory items of work, shall be due the Subcontractor; and the City shall pay that amount to the Contractor. The Contractor shall forthwith pay to the Subcontractor the full amount received from the City less any amount specified in any court proceedings barring the payment and also less any amount claimed due from the Subcontractor by the Contractor.

(c) Each payment made by the City to the Contractor pursuant to subparagraphs (a) and (b) of this paragraph for the labor performed and the materials furnished by a Subcontractor shall be made to the Contractor for the account of the Subcontractor; and the City shall take reasonable steps to compel the Contractor to make each such payment to each such Subcontractor. If the City has received a demand for direct payment from a Subcontractor for any amount which has already been included in a payment to the Contractor or which is to be included in a payment to the Contractor for payment to the Subcontractor as provided in subparagraphs (a) and (b), the City shall act upon the demand as provided in this section.

(d) If, within seventy days after the Subcontractor has substantially completed the Subcontract work, the Subcontractor has not received from the Contractor the balance due under the Subcontract including any amount due for extra labor and materials furnished to the Contractor, less any amount retained by the City, the demand shall be by a sworn statement delivered to or sent by certified mail to the City , and a copy shall be delivered to or sent by certified mail to the Contractor at the same time. The demand shall contain a detailed breakdown of the balance due under the Subcontract and also a statement of the status of the completion of the Subcontract work shall be valid even if delivered or mailed prior to the seventieth day after which the Subcontractor has substantially completed the Subcontract work. Within ten days after the Subcontractor has delivered or so mailed the demand to the City and delivered or so mailed a copy to the Contractor, the Contractor may reply to the demand. The reply shall be by a sworn statement delivered to or sent by certified mail to the City and a copy shall be delivered to or sent by certified mail to the Subcontractor at the same time. The reply shall contain a detailed breakdown of the balance due under the Subcontract including any amount due for extra labor and materials furnished to the Contractor and of the amount due for each claim made by the Contractor against the Subcontractor.

(e) Within fifteen days after receipt of the demand by the City, but in no event prior to the seventieth day after substantial completion of the Subcontract work, the City shall make direct payment to the Subcontractor of the balance due under the Subcontract including any amount due for extra labor and materials furnished to the Contractor, less any amount (i) retained by the City as the estimated cost of completing the incomplete or unsatisfactory items of work (ii) specified in any court proceedings barring such payment, or, (iii) if the reply shall not deduct from a direct payment any amount as provided in part (iii) if the reply is not sworn to, or for which the sworn reply does not contain the detailed breakdown required by subparagraph (d). The City shall make further direct payments to the Subcontractor forthwith after the removal of the basis for deductions from direct payments made as provided in parts (i) and (ii) of this subparagraph.

(f) The City shall forthwith deposit the amount deducted from a direct payment as provided in part (iii) of subparagraph (e) in an interest-bearing joint account in the names of the Contractor and the Subcontractor in a bank in Massachusetts selected by the City or agreed upon by the Contractor and the Subcontractor and shall notify the Contractor and the Subcontractor of the date of the deposit and the bank receiving the deposit. The bank shall pay the amount in the account, including accrued interest, as provided in an agreement between the Contractor and the Subcontractor or as determined by decree of a court of competent jurisdiction.

(g) All direct payments and all deductions from demands for direct payments deposited in an interest-bearing account or accounts in a bank pursuant to subparagraph (f) shall be made out of amounts payable to the Contractor at the time of receipt of a demand for direct payment from a Subcontractor and out of amounts which later become payable to the Contractor and in the order of receipt of such demands from Subcontractors. All direct payments shall discharge the obligation of the City to the Contractor to the extent of such payment.

(h) The City shall deduct from payments to a Contractor amounts which, together with deposits in interest-bearing accounts pursuant to subparagraph (f), are sufficient to satisfy all unpaid balances of demands for direct payment received from Subcontractors. All such amounts shall be earmarked for such direct payments, and the Subcontractors shall have a right in such deductions prior to any claims against such amounts by creditors of the Contractor.

ARTICLE 13
Responsibility for Work-Contractor's Responsibility

The Contractor has made his proposal from his own examinations and estimates, and shall not hold the City, its agents, or employees, responsible for or bound by, any schedule, estimate, sounding, boring, or any plan of any part of the work; shall, if any error in any plan, drawing, specification or direction relating to anything to be done under the contract come to his knowledge, report it at once to the Commissioner; shall not, except as the Commissioner shall authorize in writing, assign or sublet any part of the contract except for the supply of materials and plant, or of anything to be done thereunder; shall, subject to the provisions of the contract take all responsibility of, and bear all losses resulting to him in carrying on the contract, and shall assume the defense of, and hold the City, its agents and employees harmless from all suits and claims against them, or any of them, arising from the use of any invention, patent or patent right, material, labor or

implement, by or from any act or omission or neglect of the Contractor, his Subcontractor, his agents or employees, in carrying on the contract, or for any liability of any nature arising under the contract. The Contractor shall be solely responsible and liable for, and shall fully protect and indemnify the City against all claims for damages to persons or property occasioned by or resulting from blasting or other methods or processes in the work of construction, whether such damages be attributable to negligence of the Contractor, his employees or his Subcontractor or otherwise.

ARTICLE 14
LIGHTS--GUARDS

1. The Contractor shall assume all responsibilities of the work and take all proper precautions to protect persons and property from injury and unnecessary interference; leave a reasonably unobstructed way along public and private places for pedestrians, teams, and vehicles, and for access to hydrants; provide proper walks over or around any obstruction made in a public or private place in carrying on the contract, and maintain from the beginning of twilight through the whole of every night, on or near the obstruction sufficient lights and guards to protect travelers from injury thereby, and if, after one notification from the Commissioner that said lights and guards are not sufficient, the Contractor has not placed additional lights and guards to the satisfaction of the Commissioner, the Commissioner shall have the right to take charge of that part of the work at the expense of the Contractor. While the work is suspended he shall keep all roadways and sidewalks in proper condition, and when the work is completed put the place and vicinity in proper condition and so leave them.

2. The Contractor shall provide proper means of access to property where the existing access is cut off by the Contractor and replace or put in good condition every conduit, catch-basin, tree, wall, fence, or other thing injured by the Contractor in carrying on the contract, unless the same has been permanently done away with, on approval of the Commissioner, as being necessary to the proper carrying on of the contract.

ARTICLE 15
Guaranty

1. Any settlement or other defect, or the failure of any part of the structure or the work due to defective materials or workmanship, that occurs within one year after the work is completed, is to be immediately repaired by the Contractor. In the event of any such settlement, defect, or failure causing liability to the City for damage to persons or property, the Contractor does by this clause agree to hold the City harmless and to assume the defense of any claims therefor.

2. Responsibility under this guaranty for the adequacy of the work does not relieve the Contractor of his obligation to comply with the terms of the contract and to conform to all the requirements of the plans and specifications, nor does it give him the right to deviate in any way from the details of design of the structure or the work.

ARTICLE 16
Defective Work and Materials

The inspection of the work shall not relieve the Contractor of any of his obligations to fulfill his contract as herein described, and defective work shall be made good and unsuitable materials may be rejected, notwithstanding that such work and materials have been previously overlooked by the Engineer and accepted or estimated for payment. If the work or materials, or any part thereof shall be found defective at any time before the final acceptance of the whole work, the Contractor shall forthwith make good such defect in a manner satisfactory to the Engineer, and if any material brought upon the ground for use in the work or selected for the same, shall be condemned by the Engineer as unsuitable or not in conformity with the specifications, the Contractor shall forthwith remove such materials from the vicinity of the work. Nothing in this contract shall be construed as vesting in the Contractor any right of property in the materials used after they have been attached or affixed to the work or the soil, but all materials shall, upon being so attached or affixed, become the property of the City.

ARTICLE 17
Employment of Labor

The Contractor shall give preference in employment, first to citizens of Massachusetts, second, to other citizens of the United States; and shall allow all employees on said work to lodge, board and trade where they choose, and shall not obstruct any other person in doing work for the City; and shall conform to all labor laws of the Commonwealth; and no laborer or teamster, workman or mechanic working within this Commonwealth in the employ of the Contractor or Subcontractor or other person doing or contracting to do the whole or a part of the work contemplated by the Contractor shall be requested to, or required to, or work more than eight hours in any one calendar day. This contract is subject to all the laws of the Commonwealth, and ordinances of the City and if any clause thereof does not conform to such laws and ordinances, such clause shall be void and such laws and ordinances operated in lieu thereof.

ARTICLE 18
Laws and Regulations - Contractor to Comply with Law

The Contractor shall keep fully informed of all existing or future acts of the legislature, and of all municipal ordinances, prohibitions, rules and regulations in any manner affecting the conduct of the work, and of all orders or decrees of any body or tribunal having any jurisdiction or authority over the materials, times, places and actions of those employed in the work embraced in the contract. The Contractor shall at all times observe and comply with all existing and future acts, ordinances, prohibitions, rules, regulations, orders and decrees; and shall protect and indemnify the city and its employees against any and all claims arising from or based on any violation of such acts, ordinances, prohibitions, rules, regulations, orders or decrees, and against all violations of law by the Contractor or his agents or employees.

END OF SECTION

CITY OF NEWTON

WAGE RATE REQUIREMENTS

1. GENERAL

A. This section summarizes the requirements for the payment of wages to laborers and mechanics employed under the Contract.

B. Other duties and requirements of law which may not be specified in this section apply and are inherently a part of the Contract.

2. WAGE RATES

A. The rate per hour to be paid to mechanics, apprentices, teamsters, chauffeurs, and laborers employed on the Work shall not be less than the rate of wages in the attached "Minimum Wage Rates" as determined by the Commissioner of Labor and Industries. This schedule shall continue to be the minimum rate of wages for said employees during the life of this Contract.

B. Keep posted on the site a legible copy of said schedule. Keep on file the wage rates and classifications of labor employed on this Work in order that they may be available for inspection by the Owner, Administrator, or the Architect.

C. Apprentices employed pursuant to this determination of wage rates must be registered and approved by the State Apprenticeship Council wherever rates for journeymen or apprentices are not listed.

D. Pay reserve police officers employed on the Work the prevailing rate of wages paid to regular police officers as required by M.G.L. c149, Sec. 34B, as amended. Such police officers shall be covered by Workmen's Compensation Insurance and Employers Liability Insurance by the Contractor.

E. **The Contractor and all subcontractors shall, on a weekly basis throughout the term of the contract, provide to the City of Newton certified payroll affidavits verifying compliance with M.G.L. c.149, Sec. 27, 27A and 27B.** The Contractor is obiligated to provide such records to the City directly on a weekly basis. The City may assess a penalty of $100 for each day beyond the required submission date that such records are received, which amount shall be deducted from any amounts to the Contractor from the City. In the event of chronic late submissions, the City shall report the same to the Office of the Attorney General.

F. The Contractor and all subcontractors shall provide a Statement of Compliance within 15 days of the completion of its portion of the work. This statement shall be submitted to the Owner on the form found elsewhere in this section.

G. The Contractor shall maintain accurate and complete records, including payroll records, during the Contract term and for three years thereafter.

END OF SECTION

THE COMMONWEALTH OF MASSACHUSETTS
EXECUTIVE OFFICE OF LABOR AND WORKFORCE DEVELOPMENT
DEPARTMENT OF LABOR STANDARDS

Prevailing Wage Rates

As determined by the Director under the provisions of the Massachusetts General Laws, Chapter 149, Sections 26 to 27H

CHARLES D. BAKER
Governor

KARYN E. POLITO
Lt. Governor

RONALD L. WALKER, II
Secretary

WILLIAM D MCKINNEY
Director

Awarding Authority: City of Newton

Contract Number: #16-107 **City/Town:** NEWTON

Description of Work: 2016 Citywide Sidewalk Construction

Job Location: Various locations

Information about Prevailing Wage Schedules for Awarding Authorities and Contractors

- This wage schedule applies only to the specific project referenced at the top of this page and uniquely identified by the "Wage Request Number" on all pages of this schedule.
- An Awarding Authority must request an updated wage schedule from the Department of Labor Standards ("DLS") if it has not opened bids or selected a contractor within 90 days of the date of issuance of the wage schedule. For CM AT RISK projects (bid pursuant to G.L. c.149A), the earlier of: (a) the execution date of the GMP Amendment, or (b) the bid for the first construction scope of work must be within 90-days of the wage schedule issuance date.
- The wage schedule shall be incorporated in any advertisement or call for bids for the project as required by M.G.L. c. 149, § 27. The wage schedule shall be made a part of the contract awarded for the project. The wage schedule must be posted in a conspicuous place at the work site for the life of the project in accordance with M.G.L. c. 149 § 27. The wages listed on the wage schedule must be paid to employees performing construction work on the project whether they are employed by the prime contractor, a filed sub-bidder, or any sub-contractor.
- All apprentices working on the project are required to be registered with the Massachusetts Department of Labor Standards, Division of Apprentice Standards (DLS/DAS). Apprentice must keep his/her apprentice identification card on his/her person during all work hours on the project. An apprentice registered with DAS may be paid the lower apprentice wage rate at the applicable step as provided on the prevailing wage schedule. **Any apprentice not registered with DLS/DAS regardless of whether or not they are registered with any other federal, state, local, or private agency must be paid the journeyworker's rate for the trade.**
- The wage rates will remain in effect for the duration of the project, except in the case of multi-year public construction projects. For construction projects lasting longer than one year, awarding authorities must request an updated wage schedule. Awarding authorities are required to request these updates no later than two weeks before the anniversary of the date the contract was executed by the awarding authority and the general contractor. For multi-year CM AT RISK projects, awarding authority must request an annual update no later than two weeks before the anniversary date, determined as the earlier of: (a) the execution date of the GMP Amendment, or (b) the execution date of the first amendment to permit procurement of construction services. Contractors are required to obtain the wage schedules from awarding authorities, and to pay no less than these rates to covered workers. The annual update requirement is not applicable to 27F "rental of equipment" contracts.
- Every contractor or subcontractor which performs construction work on the project is required to submit weekly payroll reports and a Statement of Compliance directly to the awarding authority by mail or email and keep them on file for three years. Each weekly payroll report must contain: the employee's name, address, occupational classification, hours worked, and wages paid. Do not submit weekly payroll reports to DLS. A sample of a payroll reporting form may be obtained at http://www.mass.gov/dols/pw.
- Contractors with questions about the wage rates or classifications included on the wage schedule have an affirmative obligation to inquire with DLS at (617) 626-6953.
- Employees not receiving the prevailing wage rate set forth on the wage schedule may report the violation to the Fair Labor Division of the office of the Attorney General at (617) 727-3465.
- Failure of a contractor or subcontractor to pay the prevailing wage rates listed on the wage schedule to all employees who perform construction work on the project is a violation of the law and subjects the contractor or subcontractor to civil and

Issue Date: 06/09/2016 **Wage Request Number:** 20160609-055

Classification	Effective Date	Base Wage	Health	Pension	Supplemental Unemployment	Total Rate
Construction						
(2 AXLE) DRIVER - EQUIPMENT *TEAMSTERS JOINT COUNCIL NO. 10 ZONE A*	06/01/2016	$33.25	$10.41	$10.08	$0.00	$53.74
	08/01/2016	$33.25	$10.91	$10.08	$0.00	$54.24
	12/01/2016	$33.25	$10.91	$10.89	$0.00	$55.05
(3 AXLE) DRIVER - EQUIPMENT *TEAMSTERS JOINT COUNCIL NO. 10 ZONE A*	06/01/2016	$33.32	$10.41	$10.08	$0.00	$53.81
	08/01/2016	$33.32	$10.91	$10.08	$0.00	$54.31
	12/01/2016	$33.32	$10.91	$10.89	$0.00	$55.12
(4 & 5 AXLE) DRIVER - EQUIPMENT *TEAMSTERS JOINT COUNCIL NO. 10 ZONE A*	06/01/2016	$33.44	$10.41	$10.08	$0.00	$53.93
	08/01/2016	$33.44	$10.91	$10.08	$0.00	$54.43
	12/01/2016	$33.44	$10.91	$10.89	$0.00	$55.24
ADS/SUBMERSIBLE PILOT *PILE DRIVER LOCAL 56 (ZONE 1)*	08/01/2015	$88.29	$9.80	$19.23	$0.00	$117.32
For apprentice rates see "Apprentice- PILE DRIVER"						
AIR TRACK OPERATOR *LABORERS - ZONE 1*	06/01/2016	$36.85	$7.45	$13.55	$0.00	$57.85
	12/01/2016	$37.85	$7.45	$13.55	$0.00	$58.85
For apprentice rates see "Apprentice- LABORER"						
ASBESTOS REMOVER - PIPE / MECH. EQUIPT. *HEAT & FROST INSULATORS LOCAL 6 (BOSTON)*	12/01/2015	$34.38	$10.40	$5.95	$0.00	$50.73
ASPHALT RAKER *LABORERS - ZONE 1*	06/01/2016	$36.35	$7.45	$13.55	$0.00	$57.35
	12/01/2016	$37.35	$7.45	$13.55	$0.00	$58.35
For apprentice rates see "Apprentice- LABORER"						
ASPHALT/CONCRETE/CRUSHER PLANT-ON SITE *OPERATING ENGINEERS LOCAL 4*	06/01/2016	$44.23	$10.00	$15.15	$0.00	$69.38
	12/01/2016	$45.48	$10.00	$15.15	$0.00	$70.63
	06/01/2017	$46.48	$10.00	$15.15	$0.00	$71.63
	12/01/2017	$47.48	$10.00	$15.15	$0.00	$72.63
For apprentice rates see "Apprentice- OPERATING ENGINEERS"						
BACKHOE/FRONT-END LOADER *OPERATING ENGINEERS LOCAL 4*	06/01/2016	$44.23	$10.00	$15.15	$0.00	$69.38
	12/01/2016	$45.48	$10.00	$15.15	$0.00	$70.63
	06/01/2017	$46.48	$10.00	$15.15	$0.00	$71.63
	12/01/2017	$47.48	$10.00	$15.15	$0.00	$72.63
For apprentice rates see "Apprentice- OPERATING ENGINEERS"						
BARCO-TYPE JUMPING TAMPER *LABORERS - ZONE 1*	06/01/2016	$36.35	$7.45	$13.55	$0.00	$57.35
	12/01/2016	$37.35	$7.45	$13.55	$0.00	$58.35
For apprentice rates see "Apprentice- LABORER"						
BLOCK PAVER, RAMMER / CURB SETTER *LABORERS - ZONE 1*	06/01/2016	$36.85	$7.45	$13.55	$0.00	$57.85
	12/01/2016	$37.85	$7.45	$13.55	$0.00	$58.85
For apprentice rates see "Apprentice- LABORER"						
BOILER MAKER *BOILERMAKERS LOCAL 29*	01/01/2016	$41.62	$6.97	$16.21	$0.00	$64.80
	01/01/2017	$42.92	$6.97	$16.21	$0.00	$66.10

Classification	Effective Date	Base Wage	Health	Pension	Supplemental Unemployment	Total Rate

Apprentice - *BOILERMAKER - Local 29*

Effective Date - 01/01/2016

Step	percent	Apprentice Base Wage	Health	Pension	Supplemental Unemployment	Total Rate
1	65	$27.05	$6.97	$10.54	$0.00	$44.56
2	65	$27.05	$6.97	$10.54	$0.00	$44.56
3	70	$29.13	$6.97	$11.35	$0.00	$47.45
4	75	$31.22	$6.97	$12.16	$0.00	$50.35
5	80	$33.30	$6.97	$12.97	$0.00	$53.24
6	85	$35.38	$6.97	$13.78	$0.00	$56.13
7	90	$37.46	$6.97	$14.59	$0.00	$59.02
8	95	$39.54	$6.97	$15.40	$0.00	$61.91

Effective Date - 01/01/2017

Step	percent	Apprentice Base Wage	Health	Pension	Supplemental Unemployment	Total Rate
1	65	$27.90	$6.97	$10.54	$0.00	$45.41
2	65	$27.90	$6.97	$10.54	$0.00	$45.41
3	70	$30.04	$6.97	$11.35	$0.00	$48.36
4	75	$32.19	$6.97	$12.16	$0.00	$51.32
5	80	$34.34	$6.97	$12.97	$0.00	$54.28
6	85	$36.48	$6.97	$13.78	$0.00	$57.23
7	90	$38.63	$6.97	$14.59	$0.00	$60.19
8	95	$40.77	$6.97	$15.40	$0.00	$63.14

Notes:

Apprentice to Journeyworker Ratio:1:5

BRICK/STONE/ARTIFICIAL MASONRY (INCL. MASONRY WATERPROOFING) *BRICKLAYERS LOCAL 3 (NEWTON)*	02/01/2016	$49.86	$10.18	$19.14	$0.00	$79.18
	08/01/2016	$50.76	$10.18	$19.22	$0.00	$80.16
	02/01/2017	$51.33	$10.18	$19.22	$0.00	$80.73

Classification	Effective Date	Base Wage	Health	Pension	Supplemental Unemployment	Total Rate

Apprentice - *BRICK/PLASTER/CEMENT MASON - Local 3 Newton*

Effective Date - 02/01/2016

Step	percent	Apprentice Base Wage	Health	Pension	Supplemental Unemployment	Total Rate
1	50	$24.93	$10.18	$19.14	$0.00	$54.25
2	60	$29.92	$10.18	$19.14	$0.00	$59.24
3	70	$34.90	$10.18	$19.14	$0.00	$64.22
4	80	$39.89	$10.18	$19.14	$0.00	$69.21
5	90	$44.87	$10.18	$19.14	$0.00	$74.19

Effective Date - 08/01/2016

Step	percent	Apprentice Base Wage	Health	Pension	Supplemental Unemployment	Total Rate
1	50	$25.38	$10.18	$19.22	$0.00	$54.78
2	60	$30.46	$10.18	$19.22	$0.00	$59.86
3	70	$35.53	$10.18	$19.22	$0.00	$64.93
4	80	$40.61	$10.18	$19.22	$0.00	$70.01
5	90	$45.68	$10.18	$19.22	$0.00	$75.08

Notes:

Apprentice to Journeyworker Ratio:1:5

BULLDOZER/GRADER/SCRAPER *OPERATING ENGINEERS LOCAL 4*	06/01/2016	$43.81	$10.00	$15.15	$0.00	$68.96
	12/01/2016	$45.04	$10.00	$15.15	$0.00	$70.19
	06/01/2017	$46.03	$10.00	$15.15	$0.00	$71.18
	12/01/2017	$47.02	$10.00	$15.15	$0.00	$72.17
For apprentice rates see "Apprentice- OPERATING ENGINEERS"						
CAISSON & UNDERPINNING BOTTOM MAN *LABORERS - FOUNDATION AND MARINE*	06/01/2016	$37.20	$7.45	$13.75	$0.00	$58.40
	12/01/2016	$38.20	$7.45	$13.75	$0.00	$59.40
For apprentice rates see "Apprentice- LABORER"						
CAISSON & UNDERPINNING LABORER *LABORERS - FOUNDATION AND MARINE*	06/01/2016	$36.05	$7.45	$13.75	$0.00	$57.25
	12/01/2016	$37.05	$7.45	$13.75	$0.00	$58.25
For apprentice rates see "Apprentice- LABORER"						
CAISSON & UNDERPINNING TOP MAN *LABORERS - FOUNDATION AND MARINE*	06/01/2016	$36.05	$7.45	$13.75	$0.00	$57.25
	12/01/2016	$37.05	$7.45	$13.75	$0.00	$58.25
For apprentice rates see "Apprentice- LABORER"						
CARBIDE CORE DRILL OPERATOR *LABORERS - ZONE 1*	06/01/2016	$36.35	$7.45	$13.55	$0.00	$57.35
	12/01/2016	$37.35	$7.45	$13.55	$0.00	$58.35
For apprentice rates see "Apprentice- LABORER"						
CARPENTER *CARPENTERS -ZONE 2 (Eastern Massachusetts)*	03/01/2016	$37.10	$9.80	$16.82	$0.00	$63.72
	09/01/2016	$38.08	$9.80	$16.82	$0.00	$64.70
	03/01/2017	$39.05	$9.80	$16.82	$0.00	$65.67
	09/01/2017	$40.06	$9.80	$16.82	$0.00	$66.68
	03/01/2018	$41.06	$9.80	$16.82	$0.00	$67.68
	09/01/2018	$42.10	$9.80	$16.82	$0.00	$68.72
	03/01/2019	$43.13	$9.80	$16.82	$0.00	$69.75

Classification	Effective Date	Base Wage	Health	Pension	Supplemental Unemployment	Total Rate

Apprentice - *CARPENTER - Zone 2 Eastern MA*

Effective Date - 03/01/2016

Step	percent	Apprentice Base Wage	Health	Pension	Supplemental Unemployment	Total Rate
1	50	$18.55	$9.80	$1.63	$0.00	$29.98
2	60	$22.26	$9.80	$1.63	$0.00	$33.69
3	70	$25.97	$9.80	$11.93	$0.00	$47.70
4	75	$27.83	$9.80	$11.93	$0.00	$49.56
5	80	$29.68	$9.80	$13.56	$0.00	$53.04
6	80	$29.68	$9.80	$13.56	$0.00	$53.04
7	90	$33.39	$9.80	$15.19	$0.00	$58.38
8	90	$33.39	$9.80	$15.19	$0.00	$58.38

Effective Date - 09/01/2016

Step	percent	Apprentice Base Wage	Health	Pension	Supplemental Unemployment	Total Rate
1	50	$19.04	$9.80	$1.63	$0.00	$30.47
2	60	$22.85	$9.80	$1.63	$0.00	$34.28
3	70	$26.66	$9.80	$11.93	$0.00	$48.39
4	75	$28.56	$9.80	$11.93	$0.00	$50.29
5	80	$30.46	$9.80	$13.56	$0.00	$53.82
6	80	$30.46	$9.80	$13.56	$0.00	$53.82
7	90	$34.27	$9.80	$15.19	$0.00	$59.26
8	90	$34.27	$9.80	$15.19	$0.00	$59.26

Notes:

Apprentice to Journeyworker Ratio:1:5

CEMENT MASONRY/PLASTERING *BRICKLAYERS LOCAL 3 (NEWTON)*	01/01/2016	$46.44	$10.90	$18.71	$1.30	$77.35

Apprentice - *CEMENT MASONRY/PLASTERING - Eastern Mass (Newton)*

Effective Date - 01/01/2016

Step	percent	Apprentice Base Wage	Health	Pension	Supplemental Unemployment	Total Rate
1	50	$23.22	$10.90	$12.21	$0.00	$46.33
2	60	$27.86	$10.90	$13.71	$1.30	$53.77
3	65	$30.19	$10.90	$14.71	$1.30	$57.10
4	70	$32.51	$10.90	$15.71	$1.30	$60.42
5	75	$34.83	$10.90	$16.71	$1.30	$63.74
6	80	$37.15	$10.90	$17.71	$1.30	$67.06
7	90	$41.80	$10.90	$18.71	$1.30	$72.71

Notes:

Steps 3,4 are 500 hrs. All other steps are 1,000 hrs.

Apprentice to Journeyworker Ratio:1:3

Classification	Effective Date	Base Wage	Health	Pension	Supplemental Unemployment	Total Rate
CHAIN SAW OPERATOR *LABORERS - ZONE 1*	06/01/2016	$36.35	$7.45	$13.55	$0.00	$57.35
	12/01/2016	$37.35	$7.45	$13.55	$0.00	$58.35
For apprentice rates see "Apprentice- LABORER"						
CLAM SHELLS/SLURRY BUCKETS/HEADING MACHINES *OPERATING ENGINEERS LOCAL 4*	06/01/2016	$45.23	$10.00	$15.15	$0.00	$70.38
	12/01/2016	$46.48	$10.00	$15.15	$0.00	$71.63
	06/01/2017	$47.48	$10.00	$15.15	$0.00	$72.63
	12/01/2017	$48.48	$10.00	$15.15	$0.00	$73.63
For apprentice rates see "Apprentice- OPERATING ENGINEERS"						
COMPRESSOR OPERATOR *OPERATING ENGINEERS LOCAL 4*	06/01/2016	$30.40	$10.00	$15.15	$0.00	$55.55
	12/01/2016	$31.27	$10.00	$15.15	$0.00	$56.42
	06/01/2017	$31.96	$10.00	$15.15	$0.00	$57.11
	12/01/2017	$32.65	$10.00	$15.15	$0.00	$57.80
For apprentice rates see "Apprentice- OPERATING ENGINEERS"						
DELEADER (BRIDGE) *PAINTERS LOCAL 35 - ZONE 2*	01/01/2016	$49.51	$7.85	$16.10	$0.00	$73.46
	07/01/2016	$50.46	$7.85	$16.10	$0.00	$74.41
	01/01/2017	$51.41	$7.85	$16.10	$0.00	$75.36

Apprentice - *PAINTER Local 35 - BRIDGES/TANKS*

Effective Date - 01/01/2016

Step	percent	Apprentice Base Wage	Health	Pension	Supplemental Unemployment	Total Rate
1	50	$24.76	$7.85	$0.00	$0.00	$32.61
2	55	$27.23	$7.85	$3.66	$0.00	$38.74
3	60	$29.71	$7.85	$3.99	$0.00	$41.55
4	65	$32.18	$7.85	$4.32	$0.00	$44.35
5	70	$34.66	$7.85	$14.11	$0.00	$56.62
6	75	$37.13	$7.85	$14.44	$0.00	$59.42
7	80	$39.61	$7.85	$14.77	$0.00	$62.23
8	90	$44.56	$7.85	$15.44	$0.00	$67.85

Effective Date - 07/01/2016

Step	percent	Apprentice Base Wage	Health	Pension	Supplemental Unemployment	Total Rate
1	50	$25.23	$7.85	$0.00	$0.00	$33.08
2	55	$27.75	$7.85	$3.66	$0.00	$39.26
3	60	$30.28	$7.85	$3.99	$0.00	$42.12
4	65	$32.80	$7.85	$4.32	$0.00	$44.97
5	70	$35.32	$7.85	$14.11	$0.00	$57.28
6	75	$37.85	$7.85	$14.44	$0.00	$60.14
7	80	$40.37	$7.85	$14.77	$0.00	$62.99
8	90	$45.41	$7.85	$15.44	$0.00	$68.70

Notes:
Steps are 750 hrs.

Apprentice to Journeyworker Ratio:1:1

DEMO: ADZEMAN *LABORERS - ZONE 1*	12/01/2015	$35.50	$7.45	$13.55	$0.00	$56.50

Classification	Effective Date	Base Wage	Health	Pension	Supplemental Unemployment	Total Rate
For apprentice rates see "Apprentice- LABORER"						
DEMO: BACKHOE/LOADER/HAMMER OPERATOR *LABORERS - ZONE 1*	12/01/2015	$36.50	$7.45	$13.55	$0.00	$57.50
For apprentice rates see "Apprentice- LABORER"						
DEMO: BURNERS *LABORERS - ZONE 1*	12/01/2015	$36.25	$7.45	$13.55	$0.00	$57.25
For apprentice rates see "Apprentice- LABORER"						
DEMO: CONCRETE CUTTER/SAWYER *LABORERS - ZONE 1*	12/01/2015	$36.50	$7.45	$13.55	$0.00	$57.50
For apprentice rates see "Apprentice- LABORER"						
DEMO: JACKHAMMER OPERATOR *LABORERS - ZONE 1*	12/01/2015	$36.25	$7.45	$13.55	$0.00	$57.25
For apprentice rates see "Apprentice- LABORER"						
DEMO: WRECKING LABORER *LABORERS - ZONE 1*	12/01/2015	$35.50	$7.45	$13.55	$0.00	$56.50
For apprentice rates see "Apprentice- LABORER"						
DIRECTIONAL DRILL MACHINE OPERATOR *OPERATING ENGINEERS LOCAL 4*	06/01/2016	$43.81	$10.00	$15.15	$0.00	$68.96
	12/01/2016	$45.04	$10.00	$15.15	$0.00	$70.19
	06/01/2017	$46.03	$10.00	$15.15	$0.00	$71.18
	12/01/2017	$47.02	$10.00	$15.15	$0.00	$72.17
For apprentice rates see "Apprentice- OPERATING ENGINEERS"						
DIVER *PILE DRIVER LOCAL 56 (ZONE 1)*	08/01/2015	$58.86	$9.80	$19.23	$0.00	$87.89
For apprentice rates see "Apprentice- PILE DRIVER"						
DIVER TENDER *PILE DRIVER LOCAL 56 (ZONE 1)*	08/01/2015	$42.04	$9.80	$19.23	$0.00	$71.07
For apprentice rates see "Apprentice- PILE DRIVER"						
DIVER TENDER (EFFLUENT) *PILE DRIVER LOCAL 56 (ZONE 1)*	08/01/2015	$63.06	$9.80	$19.23	$0.00	$92.09
For apprentice rates see "Apprentice- PILE DRIVER"						
DIVER/SLURRY (EFFLUENT) *PILE DRIVER LOCAL 56 (ZONE 1)*	08/01/2015	$88.23	$9.80	$19.23	$0.00	$117.26
For apprentice rates see "Apprentice- PILE DRIVER"						
DRAWBRIDGE OPERATOR (Construction) *ELECTRICIANS LOCAL 103*	03/01/2016	$46.17	$13.00	$16.39	$0.00	$75.56
For apprentice rates see "Apprentice- ELECTRICIAN"						
ELECTRICIAN *ELECTRICIANS LOCAL 103*	03/01/2016	$46.17	$13.00	$16.39	$0.00	$75.56

Classification	Effective Date	Base Wage	Health	Pension	Supplemental Unemployment	Total Rate

Apprentice - *ELECTRICIAN - Local 103*

Effective Date - 03/01/2016

Step	percent	Apprentice Base Wage	Health	Pension	Supplemental Unemployment	Total Rate
1	40	$18.47	$13.00	$0.55	$0.00	$32.02
2	40	$18.47	$13.00	$0.55	$0.00	$32.02
3	45	$20.78	$13.00	$12.34	$0.00	$46.12
4	45	$20.78	$13.00	$12.34	$0.00	$46.12
5	50	$23.09	$13.00	$12.71	$0.00	$48.80
6	55	$25.39	$13.00	$13.07	$0.00	$51.46
7	60	$27.70	$13.00	$13.44	$0.00	$54.14
8	65	$30.01	$13.00	$13.81	$0.00	$56.82
9	70	$32.32	$13.00	$14.18	$0.00	$59.50
10	75	$34.63	$13.00	$14.55	$0.00	$62.18

Notes: :

App Prior 1/1/03; 30/35/40/45/50/55/65/70/75/80

Apprentice to Journeyworker Ratio:2:3***

ELEVATOR CONSTRUCTOR *ELEVATOR CONSTRUCTORS LOCAL 4*	01/01/2016	$54.53	$14.43	$14.96	$0.00	$83.92
	01/01/2017	$55.86	$15.28	$15.71	$0.00	$86.85

Apprentice - *ELEVATOR CONSTRUCTOR - Local 4*

Effective Date - 01/01/2016

Step	percent	Apprentice Base Wage	Health	Pension	Supplemental Unemployment	Total Rate
1	50	$27.27	$14.43	$0.00	$0.00	$41.70
2	55	$29.99	$14.43	$14.96	$0.00	$59.38
3	65	$35.44	$14.43	$14.96	$0.00	$64.83
4	70	$38.17	$14.43	$14.96	$0.00	$67.56
5	80	$43.62	$14.43	$14.96	$0.00	$73.01

Effective Date - 01/01/2017

Step	percent	Apprentice Base Wage	Health	Pension	Supplemental Unemployment	Total Rate
1	50	$27.93	$15.28	$0.00	$0.00	$43.21
2	55	$30.72	$15.28	$15.71	$0.00	$61.71
3	65	$36.31	$15.28	$15.71	$0.00	$67.30
4	70	$39.10	$15.28	$15.71	$0.00	$70.09
5	80	$44.69	$15.28	$15.71	$0.00	$75.68

Notes:

Steps 1-2 are 6 mos.; Steps 3-5 are 1 year

Apprentice to Journeyworker Ratio:1:1

ELEVATOR CONSTRUCTOR HELPER *ELEVATOR CONSTRUCTORS LOCAL 4*	01/01/2016	$38.17	$14.43	$14.96	$0.00	$67.56
	01/01/2017	$39.10	$15.28	$15.71	$0.00	$70.09

For apprentice rates see "Apprentice - ELEVATOR CONSTRUCTOR"

Classification	Effective Date	Base Wage	Health	Pension	Supplemental Unemployment	Total Rate
FENCE & GUARD RAIL ERECTOR *LABORERS - ZONE 1*	06/01/2016	$36.35	$7.45	$13.55	$0.00	$57.35
	12/01/2016	$37.35	$7.45	$13.55	$0.00	$58.35
For apprentice rates see "Apprentice- LABORER"						
FIELD ENG.INST.PERSON-BLDG,SITE,HVY/HWY *OPERATING ENGINEERS LOCAL 4*	05/01/2016	$41.03	$10.00	$14.90	$0.00	$65.93
	11/01/2016	$41.62	$10.00	$14.90	$0.00	$66.52
	05/01/2017	$42.50	$10.00	$14.90	$0.00	$67.40
	11/01/2017	$43.23	$10.00	$14.90	$0.00	$68.13
	05/01/2018	$43.94	$10.00	$14.90	$0.00	$68.84
For apprentice rates see "Apprentice- OPERATING ENGINEERS"						
FIELD ENG.PARTY CHIEF-BLDG,SITE,HVY/HWY *OPERATING ENGINEERS LOCAL 4*	05/01/2016	$42.47	$10.00	$14.90	$0.00	$67.37
	11/01/2016	$43.07	$10.00	$14.90	$0.00	$67.97
	05/01/2017	$43.96	$10.00	$14.90	$0.00	$68.86
	11/01/2017	$44.69	$10.00	$14.90	$0.00	$69.59
	05/01/2018	$45.41	$10.00	$14.90	$0.00	$70.31
For apprentice rates see "Apprentice- OPERATING ENGINEERS"						
FIELD ENG.ROD PERSON-BLDG,SITE,HVY/HWY *OPERATING ENGINEERS LOCAL 4*	05/01/2016	$21.88	$10.00	$14.90	$0.00	$46.78
	11/01/2016	$22.23	$10.00	$14.90	$0.00	$47.13
	05/01/2017	$22.76	$10.00	$14.90	$0.00	$47.66
	11/01/2017	$23.18	$10.00	$14.90	$0.00	$48.08
	05/01/2018	$23.61	$10.00	$14.90	$0.00	$48.51
For apprentice rates see "Apprentice- OPERATING ENGINEERS"						
FIRE ALARM INSTALLER *ELECTRICIANS LOCAL 103*	03/01/2016	$46.17	$13.00	$16.39	$0.00	$75.56
For apprentice rates see "Apprentice- ELECTRICIAN"						
FIRE ALARM REPAIR / MAINTENANCE / COMMISSIONING *ELECTRICIANS LOCAL 103*	03/01/2016	$34.63	$13.00	$14.55	$0.00	$62.18
For apprentice rates see "Apprentice- TELECOMMUNICATIONS TECHNICIAN"						
FIREMAN (ASST. ENGINEER) *OPERATING ENGINEERS LOCAL 4*	06/01/2016	$36.71	$10.00	$15.15	$0.00	$61.86
	12/01/2016	$37.75	$10.00	$15.15	$0.00	$62.90
	06/01/2017	$38.59	$10.00	$15.15	$0.00	$63.74
	12/01/2017	$39.42	$10.00	$15.15	$0.00	$64.57
For apprentice rates see "Apprentice- OPERATING ENGINEERS"						
FLAGGER & SIGNALER *LABORERS - ZONE 1*	06/01/2016	$20.50	$7.45	$13.55	$0.00	$41.50
	12/01/2016	$20.50	$7.45	$13.55	$0.00	$41.50
For apprentice rates see "Apprentice- LABORER"						
FLOORCOVERER *FLOORCOVERERS LOCAL 2168 ZONE 1*	03/01/2016	$42.13	$9.80	$17.62	$0.00	$69.55

Classification	Effective Date	Base Wage	Health	Pension	Supplemental Unemployment	Total Rate

Apprentice - *FLOORCOVERER - Local 2168 Zone 1*

Effective Date - 03/01/2016

Step	percent	Apprentice Base Wage	Health	Pension	Supplemental Unemployment	Total Rate
1	50	$21.07	$9.80	$1.79	$0.00	$32.66
2	55	$23.17	$9.80	$1.79	$0.00	$34.76
3	60	$25.28	$9.80	$12.25	$0.00	$47.33
4	65	$27.38	$9.80	$12.25	$0.00	$49.43
5	70	$29.49	$9.80	$14.04	$0.00	$53.33
6	75	$31.60	$9.80	$14.04	$0.00	$55.44
7	80	$33.70	$9.80	$15.83	$0.00	$59.33
8	85	$35.81	$9.80	$15.83	$0.00	$61.44

Notes:
Steps are 750 hrs.

Apprentice to Journeyworker Ratio:1:1

FORK LIFT/CHERRY PICKER *OPERATING ENGINEERS LOCAL 4*	06/01/2016	$44.23	$10.00	$15.15	$0.00	$69.38
	12/01/2016	$45.48	$10.00	$15.15	$0.00	$70.63
	06/01/2017	$46.48	$10.00	$15.15	$0.00	$71.63
	12/01/2017	$47.48	$10.00	$15.15	$0.00	$72.63
For apprentice rates see "Apprentice- OPERATING ENGINEERS"						
GENERATOR/LIGHTING PLANT/HEATERS *OPERATING ENGINEERS LOCAL 4*	06/01/2016	$30.40	$10.00	$15.15	$0.00	$55.55
	12/01/2016	$31.27	$10.00	$15.15	$0.00	$56.42
	06/01/2017	$31.96	$10.00	$15.15	$0.00	$57.11
	12/01/2017	$32.65	$10.00	$15.15	$0.00	$57.80
For apprentice rates see "Apprentice- OPERATING ENGINEERS"						
GLAZIER (GLASS PLANK/AIR BARRIER/INTERIOR SYSTEMS) *GLAZIERS LOCAL 35 (ZONE 2)*	01/01/2016	$39.01	$7.85	$16.10	$0.00	$62.96
	07/01/2016	$39.96	$7.85	$16.10	$0.00	$63.91
	01/01/2017	$40.91	$7.85	$16.10	$0.00	$64.86

Classification	Effective Date	Base Wage	Health	Pension	Supplemental Unemployment	Total Rate

Apprentice - *GLAZIER - Local 35 Zone 2*

Effective Date - 01/01/2016

Step	percent	Apprentice Base Wage	Health	Pension	Supplemental Unemployment	Total Rate
1	50	$19.51	$7.85	$0.00	$0.00	$27.36
2	55	$21.46	$7.85	$3.66	$0.00	$32.97
3	60	$23.41	$7.85	$3.99	$0.00	$35.25
4	65	$25.36	$7.85	$4.32	$0.00	$37.53
5	70	$27.31	$7.85	$14.11	$0.00	$49.27
6	75	$29.26	$7.85	$14.44	$0.00	$51.55
7	80	$31.21	$7.85	$14.77	$0.00	$53.83
8	90	$35.11	$7.85	$15.44	$0.00	$58.40

Effective Date - 07/01/2016

Step	percent	Apprentice Base Wage	Health	Pension	Supplemental Unemployment	Total Rate
1	50	$19.98	$7.85	$0.00	$0.00	$27.83
2	55	$21.98	$7.85	$3.66	$0.00	$33.49
3	60	$23.98	$7.85	$3.99	$0.00	$35.82
4	65	$25.97	$7.85	$4.32	$0.00	$38.14
5	70	$27.97	$7.85	$14.11	$0.00	$49.93
6	75	$29.97	$7.85	$14.44	$0.00	$52.26
7	80	$31.97	$7.85	$14.77	$0.00	$54.59
8	90	$35.96	$7.85	$15.44	$0.00	$59.25

Notes:
Steps are 750 hrs.

Apprentice to Journeyworker Ratio:1:1

HOISTING ENGINEER/CRANES/GRADALLS *OPERATING ENGINEERS LOCAL 4*	06/01/2016	$44.23	$10.00	$15.15	$0.00	$69.38
	12/01/2016	$45.48	$10.00	$15.15	$0.00	$70.63
	06/01/2017	$46.48	$10.00	$15.15	$0.00	$71.63
	12/01/2017	$47.48	$10.00	$15.15	$0.00	$72.63

Classification	Effective Date	Base Wage	Health	Pension	Supplemental Unemployment	Total Rate

Apprentice - *OPERATING ENGINEERS - Local 4*

Effective Date - 06/01/2016

Step	percent	Apprentice Base Wage	Health	Pension	Supplemental Unemployment	Total Rate
1	55	$24.33	$10.00	$0.00	$0.00	$34.33
2	60	$26.54	$10.00	$15.15	$0.00	$51.69
3	65	$28.75	$10.00	$15.15	$0.00	$53.90
4	70	$30.96	$10.00	$15.15	$0.00	$56.11
5	75	$33.17	$10.00	$15.15	$0.00	$58.32
6	80	$35.38	$10.00	$15.15	$0.00	$60.53
7	85	$37.60	$10.00	$15.15	$0.00	$62.75
8	90	$39.81	$10.00	$15.15	$0.00	$64.96

Effective Date - 12/01/2016

Step	percent	Apprentice Base Wage	Health	Pension	Supplemental Unemployment	Total Rate
1	55	$25.01	$10.00	$0.00	$0.00	$35.01
2	60	$27.29	$10.00	$15.15	$0.00	$52.44
3	65	$29.56	$10.00	$15.15	$0.00	$54.71
4	70	$31.84	$10.00	$15.15	$0.00	$56.99
5	75	$34.11	$10.00	$15.15	$0.00	$59.26
6	80	$36.38	$10.00	$15.15	$0.00	$61.53
7	85	$38.66	$10.00	$15.15	$0.00	$63.81
8	90	$40.93	$10.00	$15.15	$0.00	$66.08

Notes:

Apprentice to Journeyworker Ratio:1:6

HVAC (DUCTWORK) *SHEETMETAL WORKERS LOCAL 17 - A*	02/01/2016	$43.31	$10.70	$21.95	$2.28	$78.24
	08/01/2016	$44.46	$10.70	$21.95	$2.28	$79.39
	02/01/2017	$45.56	$10.70	$21.95	$2.28	$80.49
	08/01/2017	$46.66	$10.70	$21.95	$2.28	$81.59
	02/01/2018	$47.81	$10.70	$21.95	$2.28	$82.74
For apprentice rates see "Apprentice- SHEET METAL WORKER"						
HVAC (ELECTRICAL CONTROLS) *ELECTRICIANS LOCAL 103*	03/01/2016	$46.17	$13.00	$16.39	$0.00	$75.56
For apprentice rates see "Apprentice- ELECTRICIAN"						
HVAC (TESTING AND BALANCING - AIR) *SHEETMETAL WORKERS LOCAL 17 - A*	02/01/2016	$43.31	$10.70	$21.95	$2.28	$78.24
	08/01/2016	$44.46	$10.70	$21.95	$2.28	$79.39
	02/01/2017	$45.56	$10.70	$21.95	$2.28	$80.49
	08/01/2017	$46.66	$10.70	$21.95	$2.28	$81.59
	02/01/2018	$47.81	$10.70	$21.95	$2.28	$82.74
For apprentice rates see "Apprentice- SHEET METAL WORKER"						
HVAC (TESTING AND BALANCING -WATER) *PIPEFITTERS LOCAL 537*	03/01/2016	$49.19	$9.70	$18.14	$0.00	$77.03
	09/01/2016	$50.19	$9.70	$18.14	$0.00	$78.03
	03/01/2017	$51.19	$9.70	$18.14	$0.00	$79.03
For apprentice rates see "Apprentice- PIPEFITTER" or "PLUMBER/PIPEFITTER"						

Classification	Effective Date	Base Wage	Health	Pension	Supplemental Unemployment	Total Rate
HVAC MECHANIC *PIPEFITTERS LOCAL 537*	03/01/2016	$49.19	$9.70	$18.14	$0.00	$77.03
	09/01/2016	$50.19	$9.70	$18.14	$0.00	$78.03
	03/01/2017	$51.19	$9.70	$18.14	$0.00	$79.03
For apprentice rates see "Apprentice- PIPEFITTER" or "PLUMBER/PIPEFITTER"						
HYDRAULIC DRILLS *LABORERS - ZONE 1*	06/01/2016	$36.85	$7.45	$13.55	$0.00	$57.85
	12/01/2016	$37.85	$7.45	$13.55	$0.00	$58.85
For apprentice rates see "Apprentice- LABORER"						
INSULATOR (PIPES & TANKS) *HEAT & FROST INSULATORS LOCAL 6 (BOSTON)*	09/01/2015	$43.81	$11.50	$13.80	$0.00	$69.11
	09/01/2016	$45.81	$11.50	$13.80	$0.00	$71.11
	09/01/2017	$47.81	$11.50	$13.80	$0.00	$73.11
	09/01/2018	$50.06	$11.50	$13.80	$0.00	$75.36
	09/01/2019	$52.56	$11.50	$13.80	$0.00	$77.86

Apprentice - *ASBESTOS INSULATOR (Pipes & Tanks) - Local 6 Boston*

Effective Date - 09/01/2015

Step	percent	Apprentice Base Wage	Health	Pension	Supplemental Unemployment	Total Rate
1	50	$21.91	$11.50	$10.05	$0.00	$43.46
2	60	$26.29	$11.50	$10.80	$0.00	$48.59
3	70	$30.67	$11.50	$11.55	$0.00	$53.72
4	80	$35.05	$11.50	$12.30	$0.00	$58.85

Effective Date - 09/01/2016

Step	percent	Apprentice Base Wage	Health	Pension	Supplemental Unemployment	Total Rate
1	50	$22.91	$11.50	$10.05	$0.00	$44.46
2	60	$27.49	$11.50	$10.80	$0.00	$49.79
3	70	$32.07	$11.50	$11.55	$0.00	$55.12
4	80	$36.65	$11.50	$12.30	$0.00	$60.45

Notes:
Steps are 1 year

Apprentice to Journeyworker Ratio:1:4

IRONWORKER/WELDER *IRONWORKERS LOCAL 7 (BOSTON AREA)*	03/16/2016	$43.40	$7.80	$20.85	$0.00	$72.05
	09/16/2016	$44.05	$7.80	$20.85	$0.00	$72.70
	03/16/2017	$44.65	$7.80	$20.85	$0.00	$73.30

Classification	Effective Date	Base Wage	Health	Pension	Supplemental Unemployment	Total Rate

Apprentice - *IRONWORKER - Local 7 Boston*

Effective Date - 03/16/2016

Step	percent	Apprentice Base Wage	Health	Pension	Supplemental Unemployment	Total Rate
1	60	$26.04	$7.80	$20.85	$0.00	$54.69
2	70	$30.38	$7.80	$20.85	$0.00	$59.03
3	75	$32.55	$7.80	$20.85	$0.00	$61.20
4	80	$34.72	$7.80	$20.85	$0.00	$63.37
5	85	$36.89	$7.80	$20.85	$0.00	$65.54
6	90	$39.06	$7.80	$20.85	$0.00	$67.71

Effective Date - 09/16/2016

Step	percent	Apprentice Base Wage	Health	Pension	Supplemental Unemployment	Total Rate
1	60	$26.43	$7.80	$20.85	$0.00	$55.08
2	70	$30.84	$7.80	$20.85	$0.00	$59.49
3	75	$33.04	$7.80	$20.85	$0.00	$61.69
4	80	$35.24	$7.80	$20.85	$0.00	$63.89
5	85	$37.44	$7.80	$20.85	$0.00	$66.09
6	90	$39.65	$7.80	$20.85	$0.00	$68.30

Notes:
** Structural 1:6; Ornamental 1:4

Apprentice to Journeyworker Ratio:**

JACKHAMMER & PAVING BREAKER OPERATOR *LABORERS - ZONE 1*	06/01/2016	$36.35	$7.45	$13.55	$0.00	$57.35
	12/01/2016	$37.35	$7.45	$13.55	$0.00	$58.35
For apprentice rates see "Apprentice- LABORER"						
LABORER *LABORERS - ZONE 1*	06/01/2016	$36.10	$7.45	$13.55	$0.00	$57.10
	12/01/2016	$37.10	$7.45	$13.55	$0.00	$58.10

Classification	Effective Date	Base Wage	Health	Pension	Supplemental Unemployment	Total Rate

Apprentice - *LABORER - Zone 1*

Effective Date - 06/01/2016

Step	percent	Apprentice Base Wage	Health	Pension	Supplemental Unemployment	Total Rate
1	60	$21.66	$7.45	$13.55	$0.00	$42.66
2	70	$25.27	$7.45	$13.55	$0.00	$46.27
3	80	$28.88	$7.45	$13.55	$0.00	$49.88
4	90	$32.49	$7.45	$13.55	$0.00	$53.49

Effective Date - 12/01/2016

Step	percent	Apprentice Base Wage	Health	Pension	Supplemental Unemployment	Total Rate
1	60	$22.26	$7.45	$13.55	$0.00	$43.26
2	70	$25.97	$7.45	$13.55	$0.00	$46.97
3	80	$29.68	$7.45	$13.55	$0.00	$50.68
4	90	$33.39	$7.45	$13.55	$0.00	$54.39

Notes:

Apprentice to Journeyworker Ratio:1:5

LABORER: CARPENTER TENDER *LABORERS - ZONE 1*	06/01/2016	$36.10	$7.45	$13.55	$0.00	$57.10
	12/01/2016	$37.10	$7.45	$13.55	$0.00	$58.10
For apprentice rates see "Apprentice- LABORER"						
LABORER: CEMENT FINISHER TENDER *LABORERS - ZONE 1*	06/01/2016	$36.10	$7.45	$13.55	$0.00	$57.10
	12/01/2016	$37.10	$7.45	$13.55	$0.00	$58.10
For apprentice rates see "Apprentice- LABORER"						
LABORER: HAZARDOUS WASTE/ASBESTOS REMOVER *LABORERS - ZONE 1*	12/01/2015	$35.50	$7.45	$13.55	$0.00	$56.50
For apprentice rates see "Apprentice- LABORER"						
LABORER: MASON TENDER *LABORERS - ZONE 1*	06/01/2016	$36.35	$7.45	$13.55	$0.00	$57.35
	12/01/2016	$37.35	$7.45	$13.55	$0.00	$58.35
For apprentice rates see "Apprentice- LABORER"						
LABORER: MULTI-TRADE TENDER *LABORERS - ZONE 1*	06/01/2016	$36.10	$7.45	$13.55	$0.00	$57.10
	12/01/2016	$37.10	$7.45	$13.55	$0.00	$58.10
For apprentice rates see "Apprentice- LABORER"						
LABORER: TREE REMOVER *LABORERS - ZONE 1*	06/01/2016	$36.10	$7.45	$13.55	$0.00	$57.10
	12/01/2016	$37.10	$7.45	$13.55	$0.00	$58.10
This classification applies to all tree work associated with the removal of standing trees, and trimming and removal of branches and limbs when the work is not done for a utility company for the purpose of operation, maintenance or repair of utility company equipment. For apprentice rates see "Apprentice- LABORER"						
LASER BEAM OPERATOR *LABORERS - ZONE 1*	06/01/2016	$36.35	$7.45	$13.55	$0.00	$57.35
	12/01/2016	$37.35	$7.45	$13.55	$0.00	$58.35
For apprentice rates see "Apprentice- LABORER"						
MARBLE & TILE FINISHERS *BRICKLAYERS LOCAL 3 - MARBLE & TILE*	02/01/2016	$38.08	$10.18	$17.70	$0.00	$65.96
	08/01/2016	$38.78	$10.18	$17.78	$0.00	$66.74
	02/01/2017	$39.24	$10.18	$17.78	$0.00	$67.20

Classification	Effective Date	Base Wage	Health	Pension	Supplemental Unemployment	Total Rate

Apprentice - *MARBLE & TILE FINISHER - Local 3 Marble & Tile*

Effective Date - 02/01/2016

Step	percent	Apprentice Base Wage	Health	Pension	Supplemental Unemployment	Total Rate
1	50	$19.04	$10.18	$17.70	$0.00	$46.92
2	60	$22.85	$10.18	$17.70	$0.00	$50.73
3	70	$26.66	$10.18	$17.70	$0.00	$54.54
4	80	$30.46	$10.18	$17.70	$0.00	$58.34
5	90	$34.27	$10.18	$17.70	$0.00	$62.15

Effective Date - 08/01/2016

Step	percent	Apprentice Base Wage	Health	Pension	Supplemental Unemployment	Total Rate
1	50	$19.39	$10.18	$17.78	$0.00	$47.35
2	60	$23.27	$10.18	$17.78	$0.00	$51.23
3	70	$27.15	$10.18	$17.78	$0.00	$55.11
4	80	$31.02	$10.18	$17.78	$0.00	$58.98
5	90	$34.90	$10.18	$17.78	$0.00	$62.86

Notes:

Apprentice to Journeyworker Ratio:1:3

MARBLE MASONS,TILELAYERS & TERRAZZO MECH *BRICKLAYERS LOCAL 3 - MARBLE & TILE*	02/01/2016	$49.90	$10.18	$19.14	$0.00	$79.22
	08/01/2016	$50.80	$10.18	$19.22	$0.00	$80.20
	02/01/2017	$51.37	$10.18	$19.22	$0.00	$80.77

Classification	Effective Date	Base Wage	Health	Pension	Supplemental Unemployment	Total Rate

Apprentice - *MARBLE-TILE-TERRAZZO MECHANIC - Local 3 Marble & Tile*

Effective Date - 02/01/2016

Step	percent	Apprentice Base Wage	Health	Pension	Supplemental Unemployment	Total Rate
1	50	$24.95	$10.18	$19.14	$0.00	$54.27
2	60	$29.94	$10.18	$19.14	$0.00	$59.26
3	70	$34.93	$10.18	$19.14	$0.00	$64.25
4	80	$39.92	$10.18	$19.14	$0.00	$69.24
5	90	$44.91	$10.18	$19.14	$0.00	$74.23

Effective Date - 08/01/2016

Step	percent	Apprentice Base Wage	Health	Pension	Supplemental Unemployment	Total Rate
1	50	$25.40	$10.18	$19.22	$0.00	$54.80
2	60	$30.48	$10.18	$19.22	$0.00	$59.88
3	70	$35.56	$10.18	$19.22	$0.00	$64.96
4	80	$40.64	$10.18	$19.22	$0.00	$70.04
5	90	$45.72	$10.18	$19.22	$0.00	$75.12

Notes:

Apprentice to Journeyworker Ratio:1:5

MECH. SWEEPER OPERATOR (ON CONST. SITES) *OPERATING ENGINEERS LOCAL 4*	06/01/2016	$43.81	$10.00	$15.15	$0.00	$68.96
	12/01/2016	$45.04	$10.00	$15.15	$0.00	$70.19
	06/01/2017	$46.03	$10.00	$15.15	$0.00	$71.18
	12/01/2017	$47.02	$10.00	$15.15	$0.00	$72.17
For apprentice rates see "Apprentice- OPERATING ENGINEERS"						
MECHANICS MAINTENANCE *OPERATING ENGINEERS LOCAL 4*	06/01/2016	$43.81	$10.00	$15.15	$0.00	$68.96
	12/01/2016	$45.04	$10.00	$15.15	$0.00	$70.19
	06/01/2017	$46.03	$10.00	$15.15	$0.00	$71.18
	12/01/2017	$47.02	$10.00	$15.15	$0.00	$72.17
For apprentice rates see "Apprentice- OPERATING ENGINEERS"						
MILLWRIGHT (Zone 1) *MILLWRIGHTS LOCAL 1121 - Zone 1*	04/01/2015	$37.64	$9.80	$16.21	$0.00	$63.65

Classification	Effective Date	Base Wage	Health	Pension	Supplemental Unemployment	Total Rate

Apprentice - *MILLWRIGHT - Local 1121 Zone 1*

Effective Date - 04/01/2015

Step	percent	Apprentice Base Wage	Health	Pension	Supplemental Unemployment	Total Rate
1	55	$20.70	$9.80	$4.48	$0.00	$34.98
2	65	$24.47	$9.80	$13.36	$0.00	$47.63
3	75	$28.23	$9.80	$14.18	$0.00	$52.21
4	85	$31.99	$9.80	$14.99	$0.00	$56.78

Notes:

Steps are 2,000 hours

Apprentice to Journeyworker Ratio:1:5

MORTAR MIXER *LABORERS - ZONE 1*	06/01/2016	$36.35	$7.45	$13.55	$0.00	$57.35
	12/01/2016	$37.35	$7.45	$13.55	$0.00	$58.35
For apprentice rates see "Apprentice- LABORER"						
OILER (OTHER THAN TRUCK CRANES,GRADALLS) *OPERATING ENGINEERS LOCAL 4*	06/01/2016	$22.41	$10.00	$15.15	$0.00	$47.56
	12/01/2016	$23.06	$10.00	$15.15	$0.00	$48.21
	06/01/2017	$23.57	$10.00	$15.15	$0.00	$48.72
	12/01/2017	$24.09	$10.00	$15.15	$0.00	$49.24
For apprentice rates see "Apprentice- OPERATING ENGINEERS"						
OILER (TRUCK CRANES, GRADALLS) *OPERATING ENGINEERS LOCAL 4*	06/01/2016	$26.29	$10.00	$15.15	$0.00	$51.44
	12/01/2016	$27.04	$10.00	$15.15	$0.00	$52.19
	06/01/2017	$27.64	$10.00	$15.15	$0.00	$52.79
	12/01/2017	$28.25	$10.00	$15.15	$0.00	$53.40
For apprentice rates see "Apprentice- OPERATING ENGINEERS"						
OTHER POWER DRIVEN EQUIPMENT - CLASS II *OPERATING ENGINEERS LOCAL 4*	06/01/2016	$43.81	$10.00	$15.15	$0.00	$68.96
	12/01/2016	$45.04	$10.00	$15.15	$0.00	$70.19
	06/01/2017	$46.03	$10.00	$15.15	$0.00	$71.18
	12/01/2017	$47.02	$10.00	$15.15	$0.00	$72.17
For apprentice rates see "Apprentice- OPERATING ENGINEERS"						
PAINTER (BRIDGES/TANKS) *PAINTERS LOCAL 35 - ZONE 2*	01/01/2016	$49.51	$7.85	$16.10	$0.00	$73.46
	07/01/2016	$50.46	$7.85	$16.10	$0.00	$74.41
	01/01/2017	$51.41	$7.85	$16.10	$0.00	$75.36

Classification	Effective Date	Base Wage	Health	Pension	Supplemental Unemployment	Total Rate

Apprentice - *PAINTER Local 35 - BRIDGES/TANKS*

Effective Date - 01/01/2016

Step	percent	Apprentice Base Wage	Health	Pension	Supplemental Unemployment	Total Rate
1	50	$24.76	$7.85	$0.00	$0.00	$32.61
2	55	$27.23	$7.85	$3.66	$0.00	$38.74
3	60	$29.71	$7.85	$3.99	$0.00	$41.55
4	65	$32.18	$7.85	$4.32	$0.00	$44.35
5	70	$34.66	$7.85	$14.11	$0.00	$56.62
6	75	$37.13	$7.85	$14.44	$0.00	$59.42
7	80	$39.61	$7.85	$14.77	$0.00	$62.23
8	90	$44.56	$7.85	$15.44	$0.00	$67.85

Effective Date - 07/01/2016

Step	percent	Apprentice Base Wage	Health	Pension	Supplemental Unemployment	Total Rate
1	50	$25.23	$7.85	$0.00	$0.00	$33.08
2	55	$27.75	$7.85	$3.66	$0.00	$39.26
3	60	$30.28	$7.85	$3.99	$0.00	$42.12
4	65	$32.80	$7.85	$4.32	$0.00	$44.97
5	70	$35.32	$7.85	$14.11	$0.00	$57.28
6	75	$37.85	$7.85	$14.44	$0.00	$60.14
7	80	$40.37	$7.85	$14.77	$0.00	$62.99
8	90	$45.41	$7.85	$15.44	$0.00	$68.70

Notes:
Steps are 750 hrs.

Apprentice to Journeyworker Ratio:1:1

PAINTER (SPRAY OR SANDBLAST, NEW) *	01/01/2016	$40.41	$7.85	$16.10	$0.00	$64.36
* If 30% or more of surfaces to be painted are new construction, NEW paint rate shall be used. *PAINTERS LOCAL 35 - ZONE 2*	07/01/2016	$41.36	$7.85	$16.10	$0.00	$65.31
	01/01/2017	$42.31	$7.85	$16.10	$0.00	$66.26

Classification	Effective Date	Base Wage	Health	Pension	Supplemental Unemployment	Total Rate

Apprentice - *PAINTER Local 35 Zone 2 - Spray/Sandblast - New*

Effective Date - 01/01/2016

Step	percent	Apprentice Base Wage	Health	Pension	Supplemental Unemployment	Total Rate
1	50	$20.21	$7.85	$0.00	$0.00	$28.06
2	55	$22.23	$7.85	$3.66	$0.00	$33.74
3	60	$24.25	$7.85	$3.99	$0.00	$36.09
4	65	$26.27	$7.85	$4.32	$0.00	$38.44
5	70	$28.29	$7.85	$14.11	$0.00	$50.25
6	75	$30.31	$7.85	$14.44	$0.00	$52.60
7	80	$32.33	$7.85	$14.77	$0.00	$54.95
8	90	$36.37	$7.85	$15.44	$0.00	$59.66

Effective Date - 07/01/2016

Step	percent	Apprentice Base Wage	Health	Pension	Supplemental Unemployment	Total Rate
1	50	$20.68	$7.85	$0.00	$0.00	$28.53
2	55	$22.75	$7.85	$3.66	$0.00	$34.26
3	60	$24.82	$7.85	$3.99	$0.00	$36.66
4	65	$26.88	$7.85	$4.32	$0.00	$39.05
5	70	$28.95	$7.85	$14.11	$0.00	$50.91
6	75	$31.02	$7.85	$14.44	$0.00	$53.31
7	80	$33.09	$7.85	$14.77	$0.00	$55.71
8	90	$37.22	$7.85	$15.44	$0.00	$60.51

Notes:
Steps are 750 hrs.

Apprentice to Journeyworker Ratio:1:1

PAINTER (SPRAY OR SANDBLAST, REPAINT) *PAINTERS LOCAL 35 - ZONE 2*	01/01/2016	$38.47	$7.85	$16.10	$0.00	$62.42
	07/01/2016	$39.42	$7.85	$16.10	$0.00	$63.37
	01/01/2017	$40.37	$7.85	$16.10	$0.00	$64.32

Classification	Effective Date	Base Wage	Health	Pension	Supplemental Unemployment	Total Rate

Apprentice - *PAINTER Local 35 Zone 2 - Spray/Sandblast - Repaint*

Effective Date - 01/01/2016

Step	percent	Apprentice Base Wage	Health	Pension	Supplemental Unemployment	Total Rate
1	50	$19.24	$7.85	$0.00	$0.00	$27.09
2	55	$21.16	$7.85	$3.66	$0.00	$32.67
3	60	$23.08	$7.85	$3.99	$0.00	$34.92
4	65	$25.01	$7.85	$4.32	$0.00	$37.18
5	70	$26.93	$7.85	$14.11	$0.00	$48.89
6	75	$28.85	$7.85	$14.44	$0.00	$51.14
7	80	$30.78	$7.85	$14.77	$0.00	$53.40
8	90	$34.62	$7.85	$15.44	$0.00	$57.91

Effective Date - 07/01/2016

Step	percent	Apprentice Base Wage	Health	Pension	Supplemental Unemployment	Total Rate
1	50	$19.71	$7.85	$0.00	$0.00	$27.56
2	55	$21.68	$7.85	$3.66	$0.00	$33.19
3	60	$23.65	$7.85	$3.99	$0.00	$35.49
4	65	$25.62	$7.85	$4.32	$0.00	$37.79
5	70	$27.59	$7.85	$14.11	$0.00	$49.55
6	75	$29.57	$7.85	$14.44	$0.00	$51.86
7	80	$31.54	$7.85	$14.77	$0.00	$54.16
8	90	$35.48	$7.85	$15.44	$0.00	$58.77

Notes:
Steps are 750 hrs.

Apprentice to Journeyworker Ratio:1:1

PAINTER (TRAFFIC MARKINGS) *LABORERS - ZONE 1* For Apprentice rates see "Apprentice- LABORER"	06/01/2016	$36.10	$7.45	$13.55	$0.00	$57.10
	12/01/2016	$37.10	$7.45	$13.55	$0.00	$58.10
PAINTER / TAPER (BRUSH, NEW) * * If 30% or more of surfaces to be painted are new construction, NEW paint rate shall be used.*PAINTERS LOCAL 35 - ZONE 2*	01/01/2016	$39.01	$7.85	$16.10	$0.00	$62.96
	07/01/2016	$39.96	$7.85	$16.10	$0.00	$63.91
	01/01/2017	$40.91	$7.85	$16.10	$0.00	$64.86

Classification	Effective Date	Base Wage	Health	Pension	Supplemental Unemployment	Total Rate

Apprentice - *PAINTER - Local 35 Zone 2 - BRUSH NEW*

Effective Date - 01/01/2016

Step	percent	Apprentice Base Wage	Health	Pension	Supplemental Unemployment	Total Rate
1	50	$19.51	$7.85	$0.00	$0.00	$27.36
2	55	$21.46	$7.85	$3.66	$0.00	$32.97
3	60	$23.41	$7.85	$3.99	$0.00	$35.25
4	65	$25.36	$7.85	$4.32	$0.00	$37.53
5	70	$27.31	$7.85	$14.11	$0.00	$49.27
6	75	$29.26	$7.85	$14.44	$0.00	$51.55
7	80	$31.21	$7.85	$14.77	$0.00	$53.83
8	90	$35.11	$7.85	$15.44	$0.00	$58.40

Effective Date - 07/01/2016

Step	percent	Apprentice Base Wage	Health	Pension	Supplemental Unemployment	Total Rate
1	50	$19.98	$7.85	$0.00	$0.00	$27.83
2	55	$21.98	$7.85	$3.66	$0.00	$33.49
3	60	$23.98	$7.85	$3.99	$0.00	$35.82
4	65	$25.97	$7.85	$4.32	$0.00	$38.14
5	70	$27.97	$7.85	$14.11	$0.00	$49.93
6	75	$29.97	$7.85	$14.44	$0.00	$52.26
7	80	$31.97	$7.85	$14.77	$0.00	$54.59
8	90	$35.96	$7.85	$15.44	$0.00	$59.25

Notes:

Steps are 750 hrs.

Apprentice to Journeyworker Ratio:1:1

PAINTER / TAPER (BRUSH, REPAINT) *PAINTERS LOCAL 35 - ZONE 2*	01/01/2016	$37.07	$7.85	$16.10	$0.00	$61.02
	07/01/2016	$38.02	$7.85	$16.10	$0.00	$61.97
	01/01/2017	$38.97	$7.85	$16.10	$0.00	$62.92

Classification	Effective Date	Base Wage	Health	Pension	Supplemental Unemployment	Total Rate

Apprentice - *PAINTER Local 35 Zone 2 - BRUSH REPAINT*

Effective Date - 01/01/2016

Step	percent	Apprentice Base Wage	Health	Pension	Supplemental Unemployment	Total Rate
1	50	$18.54	$7.85	$0.00	$0.00	$26.39
2	55	$20.39	$7.85	$3.66	$0.00	$31.90
3	60	$22.24	$7.85	$3.99	$0.00	$34.08
4	65	$24.10	$7.85	$4.32	$0.00	$36.27
5	70	$25.95	$7.85	$14.11	$0.00	$47.91
6	75	$27.80	$7.85	$14.44	$0.00	$50.09
7	80	$29.66	$7.85	$14.77	$0.00	$52.28
8	90	$33.36	$7.85	$15.44	$0.00	$56.65

Effective Date - 07/01/2016

Step	percent	Apprentice Base Wage	Health	Pension	Supplemental Unemployment	Total Rate
1	50	$19.01	$7.85	$0.00	$0.00	$26.86
2	55	$20.91	$7.85	$3.66	$0.00	$32.42
3	60	$22.81	$7.85	$3.99	$0.00	$34.65
4	65	$24.71	$7.85	$4.32	$0.00	$36.88
5	70	$26.61	$7.85	$14.11	$0.00	$48.57
6	75	$28.52	$7.85	$14.44	$0.00	$50.81
7	80	$30.42	$7.85	$14.77	$0.00	$53.04
8	90	$34.22	$7.85	$15.44	$0.00	$57.51

Notes:
Steps are 750 hrs.

Apprentice to Journeyworker Ratio:1:1

PANEL & PICKUP TRUCKS DRIVER *TEAMSTERS JOINT COUNCIL NO. 10 ZONE A*	06/01/2016	$33.08	$10.41	$10.08	$0.00	$53.57
	08/01/2016	$33.08	$10.91	$10.08	$0.00	$54.07
	12/01/2016	$33.08	$10.91	$10.89	$0.00	$54.88
PIER AND DOCK CONSTRUCTOR (UNDERPINNING AND DECK) *PILE DRIVER LOCAL 56 (ZONE 1)* For apprentice rates see "Apprentice- PILE DRIVER"	08/01/2015	$42.04	$9.80	$19.23	$0.00	$71.07
PILE DRIVER *PILE DRIVER LOCAL 56 (ZONE 1)*	08/01/2015	$42.04	$9.80	$19.23	$0.00	$71.07

Classification	Effective Date	Base Wage	Health	Pension	Supplemental Unemployment	Total Rate

Apprentice - *PILE DRIVER - Local 56 Zone 1*

Effective Date - 08/01/2015

Step	percent	Apprentice Base Wage	Health	Pension	Supplemental Unemployment	Total Rate
1	50	$21.02	$9.80	$19.23	$0.00	$50.05
2	60	$25.22	$9.80	$19.23	$0.00	$54.25
3	70	$29.43	$9.80	$19.23	$0.00	$58.46
4	75	$31.53	$9.80	$19.23	$0.00	$60.56
5	80	$33.63	$9.80	$19.23	$0.00	$62.66
6	80	$33.63	$9.80	$19.23	$0.00	$62.66
7	90	$37.84	$9.80	$19.23	$0.00	$66.87
8	90	$37.84	$9.80	$19.23	$0.00	$66.87

Notes:

Apprentice to Journeyworker Ratio:1:3

PIPEFITTER & STEAMFITTER *PIPEFITTERS LOCAL 537*	03/01/2016	$49.19	$9.70	$18.14	$0.00	$77.03
	09/01/2016	$50.19	$9.70	$18.14	$0.00	$78.03
	03/01/2017	$51.19	$9.70	$18.14	$0.00	$79.03

Apprentice - *PIPEFITTER - Local 537*

Effective Date - 03/01/2016

Step	percent	Apprentice Base Wage	Health	Pension	Supplemental Unemployment	Total Rate
1	40	$19.68	$9.70	$7.50	$0.00	$36.88
2	45	$22.14	$9.70	$18.14	$0.00	$49.98
3	60	$29.51	$9.70	$18.14	$0.00	$57.35
4	70	$34.43	$9.70	$18.14	$0.00	$62.27
5	80	$39.35	$9.70	$18.14	$0.00	$67.19

Effective Date - 09/01/2016

Step	percent	Apprentice Base Wage	Health	Pension	Supplemental Unemployment	Total Rate
1	40	$20.08	$9.70	$7.50	$0.00	$37.28
2	45	$22.59	$9.70	$18.14	$0.00	$50.43
3	60	$30.11	$9.70	$18.14	$0.00	$57.95
4	70	$35.13	$9.70	$18.14	$0.00	$62.97
5	80	$40.15	$9.70	$18.14	$0.00	$67.99

Notes:

** 1:3; 3:15; 1:10 thereafter / Steps are 1 yr.
Refrig/AC Mechanic **1:1;1:2;2:4;3:6;4:8;5:10;6:12;7:14;8:17;9:20;10:23(Max)

Apprentice to Journeyworker Ratio:**

PIPELAYER *LABORERS - ZONE 1*	06/01/2016	$36.35	$7.45	$13.55	$0.00	$57.35
	12/01/2016	$37.35	$7.45	$13.55	$0.00	$58.35

For apprentice rates see "Apprentice- LABORER"

Classification	Effective Date	Base Wage	Health	Pension	Supplemental Unemployment	Total Rate
PLUMBERS & GASFITTERS *PLUMBERS & GASFITTERS LOCAL 12*	03/01/2016	$51.36	$11.07	$15.14	$0.00	$77.57
	09/01/2016	$52.41	$11.07	$15.14	$0.00	$78.62
	03/01/2017	$53.41	$11.07	$15.14	$0.00	$79.62

Apprentice - *PLUMBER/GASFITTER - Local 12*

Effective Date - 03/01/2016

Step	percent	Apprentice Base Wage	Health	Pension	Supplemental Unemployment	Total Rate
1	35	$17.98	$11.07	$5.63	$0.00	$34.68
2	40	$20.54	$11.07	$6.37	$0.00	$37.98
3	55	$28.25	$11.07	$8.56	$0.00	$47.88
4	65	$33.38	$11.07	$10.03	$0.00	$54.48
5	75	$38.52	$11.07	$11.48	$0.00	$61.07

Effective Date - 09/01/2016

Step	percent	Apprentice Base Wage	Health	Pension	Supplemental Unemployment	Total Rate
1	35	$18.34	$11.07	$5.63	$0.00	$35.04
2	40	$20.96	$11.07	$6.36	$0.00	$38.39
3	55	$28.83	$11.07	$8.55	$0.00	$48.45
4	65	$34.07	$11.07	$10.02	$0.00	$55.16
5	75	$39.31	$11.07	$11.48	$0.00	$61.86

Notes:
** 1:2; 2:6; 3:10; 4:14; 5:19/Steps are 1 yr
Step4 with lic$57.78 Step5 with lic$64.37

Apprentice to Journeyworker Ratio:**

PNEUMATIC CONTROLS (TEMP.) *PIPEFITTERS LOCAL 537*	03/01/2016	$49.19	$9.70	$18.14	$0.00	$77.03
	09/01/2016	$50.19	$9.70	$18.14	$0.00	$78.03
	03/01/2017	$51.19	$9.70	$18.14	$0.00	$79.03
For apprentice rates see "Apprentice- PIPEFITTER" or "PLUMBER/PIPEFITTER"						
PNEUMATIC DRILL/TOOL OPERATOR *LABORERS - ZONE 1*	06/01/2016	$36.35	$7.45	$13.55	$0.00	$57.35
	12/01/2016	$37.35	$7.45	$13.55	$0.00	$58.35
For apprentice rates see "Apprentice- LABORER"						
POWDERMAN & BLASTER *LABORERS - ZONE 1*	06/01/2016	$37.10	$7.45	$13.55	$0.00	$58.10
	12/01/2016	$38.10	$7.45	$13.55	$0.00	$59.10
For apprentice rates see "Apprentice- LABORER"						
POWER SHOVEL/DERRICK/TRENCHING MACHINE *OPERATING ENGINEERS LOCAL 4*	06/01/2016	$44.23	$10.00	$15.15	$0.00	$69.38
	12/01/2016	$45.48	$10.00	$15.15	$0.00	$70.63
	06/01/2017	$46.48	$10.00	$15.15	$0.00	$71.63
	12/01/2017	$47.48	$10.00	$15.15	$0.00	$72.63
For apprentice rates see "Apprentice- OPERATING ENGINEERS"						
PUMP OPERATOR (CONCRETE) *OPERATING ENGINEERS LOCAL 4*	06/01/2016	$44.23	$10.00	$15.15	$0.00	$69.38
	12/01/2016	$45.48	$10.00	$15.15	$0.00	$70.63
	06/01/2017	$46.48	$10.00	$15.15	$0.00	$71.63
	12/01/2017	$47.48	$10.00	$15.15	$0.00	$72.63
For apprentice rates see "Apprentice- OPERATING ENGINEERS"						

Classification	Effective Date	Base Wage	Health	Pension	Supplemental Unemployment	Total Rate
PUMP OPERATOR (DEWATERING, OTHER) *OPERATING ENGINEERS LOCAL 4*	06/01/2016	$30.40	$10.00	$15.15	$0.00	$55.55
	12/01/2016	$31.27	$10.00	$15.15	$0.00	$56.42
	06/01/2017	$31.96	$10.00	$15.15	$0.00	$57.11
	12/01/2017	$32.65	$10.00	$15.15	$0.00	$57.80
For apprentice rates see "Apprentice- OPERATING ENGINEERS"						
READY MIX CONCRETE DRIVERS after 4/30/10 (Drivers Hired After 4/30/2010) *TEAMSTERS LOCAL 25b*	05/01/2016	$28.03	$7.98	$9.31	$0.00	$45.32
	07/01/2016	$28.03	$8.23	$9.31	$0.00	$45.57
	05/01/2017	$28.18	$8.23	$9.72	$0.00	$46.13
	07/01/2017	$28.18	$8.48	$9.72	$0.00	$46.38
READY-MIX CONCRETE DRIVER *TEAMSTERS LOCAL 25b*	05/01/2016	$29.33	$7.98	$9.31	$0.00	$46.62
	07/01/2016	$29.33	$8.23	$9.31	$0.00	$46.87
	05/01/2017	$29.48	$8.23	$9.72	$0.00	$47.43
	07/01/2017	$29.48	$8.48	$9.72	$0.00	$47.68
RECLAIMERS *OPERATING ENGINEERS LOCAL 4*	06/01/2016	$43.81	$10.00	$15.15	$0.00	$68.96
	12/01/2016	$45.04	$10.00	$15.15	$0.00	$70.19
	06/01/2017	$46.03	$10.00	$15.15	$0.00	$71.18
	12/01/2017	$47.02	$10.00	$15.15	$0.00	$72.17
For apprentice rates see "Apprentice- OPERATING ENGINEERS"						
RESIDENTIAL WOOD FRAME (All Other Work) *CARPENTERS -ZONE 2 (Residential Wood)*	04/01/2011	$24.24	$8.67	$15.51	$0.00	$48.42
RESIDENTIAL WOOD FRAME CARPENTER ** ** The Residential Wood Frame Carpenter classification applies only to the construction of new, wood frame residences that do not exceed four stories including the basement. *CARPENTERS -ZONE 2 (Residential Wood)*	05/01/2011	$24.24	$6.34	$6.23	$0.00	$36.81

As of 9/1/09 Carpentry work on wood-frame residential WEATHERIZATION projects shall be paid the RESIDENTIAL WOOD FRAME CARPENTER rate.

Apprentice - *CARPENTER (Residential Wood Frame) - Zone 2*

Effective Date - 05/01/2011

Step	percent	Apprentice Base Wage	Health	Pension	Supplemental Unemployment	Total Rate
1	60	$14.54	$6.34	$0.00	$0.00	$20.88
2	60	$14.54	$6.34	$6.23	$0.00	$27.11
3	65	$15.76	$6.34	$6.23	$0.00	$28.33
4	70	$16.97	$6.34	$6.23	$0.00	$29.54
5	75	$18.18	$6.34	$6.23	$0.00	$30.75
6	80	$19.39	$6.34	$6.23	$0.00	$31.96
7	85	$20.60	$6.34	$6.23	$0.00	$33.17
8	90	$21.82	$6.34	$6.23	$0.00	$34.39

Notes:

Apprentice to Journeyworker Ratio:1:5

RIDE-ON MOTORIZED BUGGY OPERATOR *LABORERS - ZONE 1*	06/01/2016	$36.35	$7.45	$13.55	$0.00	$57.35
	12/01/2016	$37.35	$7.45	$13.55	$0.00	$58.35
For apprentice rates see "Apprentice- LABORER"						

Classification	Effective Date	Base Wage	Health	Pension	Supplemental Unemployment	Total Rate
ROLLER/SPREADER/MULCHING MACHINE *OPERATING ENGINEERS LOCAL 4*	06/01/2016	$43.81	$10.00	$15.15	$0.00	$68.96
	12/01/2016	$45.04	$10.00	$15.15	$0.00	$70.19
	06/01/2017	$46.03	$10.00	$15.15	$0.00	$71.18
	12/01/2017	$47.02	$10.00	$15.15	$0.00	$72.17
For apprentice rates see "Apprentice- OPERATING ENGINEERS"						
ROOFER (Inc.Roofer Waterproofng &Roofer Damproofg) *ROOFERS LOCAL 33*	02/01/2016	$40.11	$11.00	$12.90	$0.00	$64.01

Apprentice - *ROOFER - Local 33*
Effective Date - 02/01/2016

Step	percent	Apprentice Base Wage	Health	Pension	Supplemental Unemployment	Total Rate
1	50	$20.06	$11.00	$3.39	$0.00	$34.45
2	60	$24.07	$11.00	$12.90	$0.00	$47.97
3	65	$26.07	$11.00	$12.90	$0.00	$49.97
4	75	$30.08	$11.00	$12.90	$0.00	$53.98
5	85	$34.09	$11.00	$12.90	$0.00	$57.99

Notes: ** 1:5, 2:6-10, the 1:10; Reroofing: 1:4, then 1:1
Step 1 is 2000 hrs.; Steps 2-5 are 1000 hrs.

Apprentice to Journeyworker Ratio:**

ROOFER SLATE / TILE / PRECAST CONCRETE *ROOFERS LOCAL 33*	02/01/2016	$40.36	$11.00	$12.90	$0.00	$64.26
For apprentice rates see "Apprentice- ROOFER"						
SHEETMETAL WORKER *SHEETMETAL WORKERS LOCAL 17 - A*	02/01/2016	$43.31	$10.70	$21.95	$2.28	$78.24
	08/01/2016	$44.46	$10.70	$21.95	$2.28	$79.39
	02/01/2017	$45.56	$10.70	$21.95	$2.28	$80.49
	08/01/2017	$46.66	$10.70	$21.95	$2.28	$81.59
	02/01/2018	$47.81	$10.70	$21.95	$2.28	$82.74

Classification	Effective Date	Base Wage	Health	Pension	Supplemental Unemployment	Total Rate

Apprentice - *SHEET METAL WORKER - Local 17-A*

Effective Date - 02/01/2016

Step	percent	Apprentice Base Wage	Health	Pension	Supplemental Unemployment	Total Rate
1	40	$17.32	$10.70	$4.90	$0.00	$32.92
2	40	$17.32	$10.70	$4.90	$0.00	$32.92
3	45	$19.49	$10.70	$9.79	$1.20	$41.18
4	45	$19.49	$10.70	$9.79	$1.20	$41.18
5	50	$21.66	$10.70	$10.65	$1.29	$44.30
6	50	$21.66	$10.70	$10.90	$1.30	$44.56
7	60	$25.99	$10.70	$12.37	$1.47	$50.53
8	65	$28.15	$10.70	$13.24	$1.56	$53.65
9	75	$32.48	$10.70	$14.97	$1.74	$59.89
10	85	$36.81	$10.70	$16.18	$1.91	$65.60

Effective Date - 08/01/2016

Step	percent	Apprentice Base Wage	Health	Pension	Supplemental Unemployment	Total Rate
1	40	$17.78	$10.70	$4.90	$0.00	$33.38
2	40	$17.78	$10.70	$4.90	$0.00	$33.38
3	45	$20.01	$10.70	$9.79	$1.22	$41.72
4	45	$20.01	$10.70	$9.79	$1.22	$41.72
5	50	$22.23	$10.70	$10.65	$1.31	$44.89
6	50	$22.23	$10.70	$10.90	$1.31	$45.14
7	60	$26.68	$10.70	$12.37	$1.49	$51.24
8	65	$28.90	$10.70	$13.24	$1.59	$54.43
9	75	$33.35	$10.70	$14.97	$1.77	$60.79
10	85	$37.79	$10.70	$16.18	$1.94	$66.61

Notes:

Steps are 6 mos.

Apprentice to Journeyworker Ratio:1:4

SIGN ERECTOR *PAINTERS LOCAL 35 - ZONE 2*	06/01/2013	$25.81	$7.07	$7.05	$0.00	$39.93

Classification	Effective Date	Base Wage	Health	Pension	Supplemental Unemployment	Total Rate

Apprentice - *SIGN ERECTOR - Local 35 Zone 2*
Effective Date - 06/01/2013

Step	percent	Apprentice Base Wage	Health	Pension	Supplemental Unemployment	Total Rate
1	50	$12.91	$7.07	$0.00	$0.00	$19.98
2	55	$14.20	$7.07	$2.45	$0.00	$23.72
3	60	$15.49	$7.07	$2.45	$0.00	$25.01
4	65	$16.78	$7.07	$2.45	$0.00	$26.30
5	70	$18.07	$7.07	$7.05	$0.00	$32.19
6	75	$19.36	$7.07	$7.05	$0.00	$33.48
7	80	$20.65	$7.07	$7.05	$0.00	$34.77
8	85	$21.94	$7.07	$7.05	$0.00	$36.06
9	90	$23.23	$7.07	$7.05	$0.00	$37.35

Notes:
Steps are 4 mos.

Apprentice to Journeyworker Ratio:1:1

SPECIALIZED EARTH MOVING EQUIP < 35 TONS *TEAMSTERS JOINT COUNCIL NO. 10 ZONE A*	06/01/2016	$33.54	$10.41	$10.08	$0.00	$54.03
	08/01/2016	$33.54	$10.91	$10.08	$0.00	$54.53
	12/01/2016	$33.54	$10.91	$10.89	$0.00	$55.34
SPECIALIZED EARTH MOVING EQUIP > 35 TONS *TEAMSTERS JOINT COUNCIL NO. 10 ZONE A*	06/01/2016	$33.83	$10.41	$10.08	$0.00	$54.32
	08/01/2016	$33.83	$10.91	$10.08	$0.00	$54.82
	12/01/2016	$33.83	$10.91	$10.89	$0.00	$55.63
SPRINKLER FITTER *SPRINKLER FITTERS LOCAL 550 - (Section A) Zone 1*	03/01/2016	$54.43	$8.67	$16.80	$0.00	$79.90
	10/01/2016	$55.53	$8.67	$16.80	$0.00	$81.00
	03/01/2017	$56.53	$8.67	$16.80	$0.00	$82.00

Classification	Effective Date	Base Wage	Health	Pension	Supplemental Unemployment	Total Rate

Apprentice - *SPRINKLER FITTER - Local 550 (Section A) Zone 1*

Effective Date - 03/01/2016

Step	percent	Apprentice Base Wage	Health	Pension	Supplemental Unemployment	Total Rate
1	35	$19.05	$8.67	$8.55	$0.00	$36.27
2	40	$21.77	$8.67	$8.55	$0.00	$38.99
3	45	$24.49	$8.67	$8.55	$0.00	$41.71
4	50	$27.22	$8.67	$8.55	$0.00	$44.44
5	55	$29.94	$8.67	$8.55	$0.00	$47.16
6	60	$32.66	$8.67	$8.55	$0.00	$49.88
7	65	$35.38	$8.67	$8.55	$0.00	$52.60
8	70	$38.10	$8.67	$8.55	$0.00	$55.32
9	75	$40.82	$8.67	$8.55	$0.00	$58.04
10	80	$43.54	$8.67	$8.55	$0.00	$60.76

Effective Date - 10/01/2016

Step	percent	Apprentice Base Wage	Health	Pension	Supplemental Unemployment	Total Rate
1	35	$19.44	$8.67	$8.55	$0.00	$36.66
2	40	$22.21	$8.67	$8.55	$0.00	$39.43
3	45	$24.99	$8.67	$8.55	$0.00	$42.21
4	50	$27.77	$8.67	$8.55	$0.00	$44.99
5	55	$30.54	$8.67	$8.55	$0.00	$47.76
6	60	$33.32	$8.67	$8.55	$0.00	$50.54
7	65	$36.09	$8.67	$8.55	$0.00	$53.31
8	70	$38.87	$8.67	$8.55	$0.00	$56.09
9	75	$41.65	$8.67	$8.55	$0.00	$58.87
10	80	$44.42	$8.67	$8.55	$0.00	$61.64

Notes: Apprentice entered prior 9/30/10:
40/45/50/55/60/65/70/75/80/85
Steps are 850 hours

Apprentice to Journeyworker Ratio:1:3

STEAM BOILER OPERATOR *OPERATING ENGINEERS LOCAL 4*	06/01/2016	$43.81	$10.00	$15.15	$0.00	$68.96
	12/01/2016	$45.04	$10.00	$15.15	$0.00	$70.19
	06/01/2017	$46.03	$10.00	$15.15	$0.00	$71.18
	12/01/2017	$47.02	$10.00	$15.15	$0.00	$72.17
For apprentice rates see "Apprentice- OPERATING ENGINEERS"						
TAMPERS, SELF-PROPELLED OR TRACTOR DRAWN *OPERATING ENGINEERS LOCAL 4*	06/01/2016	$43.81	$10.00	$15.15	$0.00	$68.96
	12/01/2016	$45.04	$10.00	$15.15	$0.00	$70.19
	06/01/2017	$46.03	$10.00	$15.15	$0.00	$71.18
	12/01/2017	$47.02	$10.00	$15.15	$0.00	$72.17
For apprentice rates see "Apprentice- OPERATING ENGINEERS"						
TELECOMMUNICATION TECHNICIAN *ELECTRICIANS LOCAL 103*	03/01/2016	$34.63	$13.00	$14.55	$0.00	$62.18

Classification	Effective Date	Base Wage	Health	Pension	Supplemental Unemployment	Total Rate

Apprentice - *TELECOMMUNICATION TECHNICIAN - Local 103*

Effective Date - 03/01/2016

Step	percent	Apprentice Base Wage	Health	Pension	Supplemental Unemployment	Total Rate
1	40	$13.85	$13.00	$0.42	$0.00	$27.27
2	40	$13.85	$13.00	$0.42	$0.00	$27.27
3	45	$15.58	$13.00	$11.52	$0.00	$40.10
4	45	$15.58	$13.00	$11.52	$0.00	$40.10
5	50	$17.32	$13.00	$11.79	$0.00	$42.11
6	55	$19.05	$13.00	$12.06	$0.00	$44.11
7	60	$20.78	$13.00	$12.34	$0.00	$46.12
8	65	$22.51	$13.00	$12.62	$0.00	$48.13
9	70	$24.24	$13.00	$12.90	$0.00	$50.14
10	75	$25.97	$13.00	$13.17	$0.00	$52.14

Notes:

Apprentice to Journeyworker Ratio:1:1

TERRAZZO FINISHERS *BRICKLAYERS LOCAL 3 - MARBLE & TILE*	02/01/2016	$48.80	$10.18	$19.14	$0.00	$78.12
	08/01/2016	$49.70	$10.18	$19.22	$0.00	$79.10
	02/01/2017	$50.27	$10.18	$19.22	$0.00	$79.67

Apprentice - *TERRAZZO FINISHER - Local 3 Marble & Tile*

Effective Date - 02/01/2016

Step	percent	Apprentice Base Wage	Health	Pension	Supplemental Unemployment	Total Rate
1	50	$24.40	$10.18	$19.14	$0.00	$53.72
2	60	$29.28	$10.18	$19.14	$0.00	$58.60
3	70	$34.16	$10.18	$19.14	$0.00	$63.48
4	80	$39.04	$10.18	$19.14	$0.00	$68.36
5	90	$43.92	$10.18	$19.14	$0.00	$73.24

Effective Date - 08/01/2016

Step	percent	Apprentice Base Wage	Health	Pension	Supplemental Unemployment	Total Rate
1	50	$24.85	$10.18	$19.22	$0.00	$54.25
2	60	$29.82	$10.18	$19.22	$0.00	$59.22
3	70	$34.79	$10.18	$19.22	$0.00	$64.19
4	80	$39.76	$10.18	$19.22	$0.00	$69.16
5	90	$44.73	$10.18	$19.22	$0.00	$74.13

Notes:

Apprentice to Journeyworker Ratio:1:3

Classification	Effective Date	Base Wage	Health	Pension	Supplemental Unemployment	Total Rate
TEST BORING DRILLER *LABORERS - FOUNDATION AND MARINE*	06/01/2016	$37.45	$7.45	$13.75	$0.00	$58.65
	12/01/2016	$38.45	$7.45	$13.75	$0.00	$59.65
For apprentice rates see "Apprentice- LABORER"						
TEST BORING DRILLER HELPER *LABORERS - FOUNDATION AND MARINE*	06/01/2016	$36.17	$7.45	$13.75	$0.00	$57.37
	12/01/2016	$37.17	$7.45	$13.75	$0.00	$58.37
For apprentice rates see "Apprentice- LABORER"						
TEST BORING LABORER *LABORERS - FOUNDATION AND MARINE*	06/01/2016	$36.05	$7.45	$13.75	$0.00	$57.25
	12/01/2016	$37.05	$7.45	$13.75	$0.00	$58.25
For apprentice rates see "Apprentice- LABORER"						
TRACTORS/PORTABLE STEAM GENERATORS *OPERATING ENGINEERS LOCAL 4*	06/01/2016	$43.81	$10.00	$15.15	$0.00	$68.96
	12/01/2016	$45.04	$10.00	$15.15	$0.00	$70.19
	06/01/2017	$46.03	$10.00	$15.15	$0.00	$71.18
	12/01/2017	$47.02	$10.00	$15.15	$0.00	$72.17
For apprentice rates see "Apprentice- OPERATING ENGINEERS"						
TRAILERS FOR EARTH MOVING EQUIPMENT *TEAMSTERS JOINT COUNCIL NO. 10 ZONE A*	06/01/2016	$34.12	$10.41	$10.08	$0.00	$54.61
	08/01/2016	$34.12	$10.91	$10.08	$0.00	$55.11
	12/01/2016	$34.12	$10.91	$10.89	$0.00	$55.92
TUNNEL WORK - COMPRESSED AIR *LABORERS (COMPRESSED AIR)*	06/01/2016	$48.33	$7.45	$14.15	$0.00	$69.93
	12/01/2016	$49.33	$7.45	$14.15	$0.00	$70.93
For apprentice rates see "Apprentice- LABORER"						
TUNNEL WORK - COMPRESSED AIR (HAZ. WASTE) *LABORERS (COMPRESSED AIR)*	06/01/2016	$50.33	$7.45	$14.15	$0.00	$71.93
	12/01/2016	$51.33	$7.45	$14.15	$0.00	$72.93
For apprentice rates see "Apprentice- LABORER"						
TUNNEL WORK - FREE AIR *LABORERS (FREE AIR TUNNEL)*	06/01/2016	$40.40	$7.45	$14.15	$0.00	$62.00
	12/01/2016	$41.40	$7.45	$14.15	$0.00	$63.00
For apprentice rates see "Apprentice- LABORER"						
TUNNEL WORK - FREE AIR (HAZ. WASTE) *LABORERS (FREE AIR TUNNEL)*	06/01/2016	$42.40	$7.45	$14.15	$0.00	$64.00
	12/01/2016	$43.40	$7.45	$14.15	$0.00	$65.00
For apprentice rates see "Apprentice- LABORER"						
VAC-HAUL *TEAMSTERS JOINT COUNCIL NO. 10 ZONE A*	06/01/2016	$33.54	$10.41	$10.08	$0.00	$54.03
	08/01/2016	$33.54	$10.91	$10.08	$0.00	$54.53
	12/01/2016	$33.54	$10.91	$10.89	$0.00	$55.34
WAGON DRILL OPERATOR *LABORERS - ZONE 1*	06/01/2016	$36.35	$7.45	$13.55	$0.00	$57.35
	12/01/2016	$37.35	$7.45	$13.55	$0.00	$58.35
For apprentice rates see "Apprentice- LABORER"						
WASTE WATER PUMP OPERATOR *OPERATING ENGINEERS LOCAL 4*	06/01/2016	$44.23	$10.00	$15.15	$0.00	$69.38
	12/01/2016	$45.48	$10.00	$15.15	$0.00	$70.63
	06/01/2017	$46.48	$10.00	$15.15	$0.00	$71.63
	12/01/2017	$47.48	$10.00	$15.15	$0.00	$72.63
For apprentice rates see "Apprentice- OPERATING ENGINEERS"						
WATER METER INSTALLER *PLUMBERS & GASFITTERS LOCAL 12*	03/01/2016	$51.36	$11.07	$15.14	$0.00	$77.57
	09/01/2016	$52.41	$11.07	$15.14	$0.00	$78.62
	03/01/2017	$53.41	$11.07	$15.14	$0.00	$79.62
For apprentice rates see "Apprentice- PLUMBER/PIPEFITTER" or "PLUMBER/GASFITTER"						
Outside Electrical - East						
CABLE TECHNICIAN (Power Zone) *OUTSIDE ELECTRICAL WORKERS - EAST LOCAL 104*	08/30/2015	$26.11	$7.25	$1.78	$0.00	$35.14
	08/28/2016	$26.61	$7.50	$1.80	$0.00	$35.91
	09/03/2017	$27.14	$7.75	$1.81	$0.00	$36.70

Classification	Effective Date	Base Wage	Health	Pension	Supplemental Unemployment	Total Rate
For apprentice rates see "Apprentice- LINEMAN"						
CABLEMAN (Underground Ducts & Cables)	08/30/2015	$36.98	$7.25	$8.12	$0.00	$52.35
OUTSIDE ELECTRICAL WORKERS - EAST LOCAL 104	08/28/2016	$37.70	$7.50	$8.87	$0.00	$54.07
	09/03/2017	$38.45	$7.75	$9.53	$0.00	$55.73
For apprentice rates see "Apprentice- LINEMAN"						
DRIVER / GROUNDMAN CDL	08/30/2015	$30.46	$7.25	$8.34	$0.00	$46.05
OUTSIDE ELECTRICAL WORKERS - EAST LOCAL 104	08/28/2016	$31.05	$7.50	$8.89	$0.00	$47.44
	09/03/2017	$31.66	$7.75	$9.44	$0.00	$48.85
For apprentice rates see "Apprentice- LINEMAN"						
DRIVER / GROUNDMAN -Inexperienced (<2000 Hrs)	08/30/2015	$23.93	$7.25	$1.72	$0.00	$32.90
OUTSIDE ELECTRICAL WORKERS - EAST LOCAL 104	08/28/2016	$24.39	$7.50	$1.73	$0.00	$33.62
	09/03/2017	$24.88	$7.75	$1.75	$0.00	$34.38
For apprentice rates see "Apprentice- LINEMAN"						
EQUIPMENT OPERATOR (Class A CDL)	08/30/2015	$36.98	$7.25	$12.29	$0.00	$56.52
OUTSIDE ELECTRICAL WORKERS - EAST LOCAL 104	08/28/2016	$37.70	$7.50	$12.95	$0.00	$58.15
	09/03/2017	$38.45	$7.75	$13.61	$0.00	$59.81
For apprentice rates see "Apprentice- LINEMAN"						
EQUIPMENT OPERATOR (Class B CDL)	08/30/2015	$32.63	$7.25	$9.05	$0.00	$48.93
OUTSIDE ELECTRICAL WORKERS - EAST LOCAL 104	08/28/2016	$33.26	$7.50	$9.63	$0.00	$50.39
	09/03/2017	$33.92	$7.75	$10.21	$0.00	$51.88
For apprentice rates see "Apprentice- LINEMAN"						
GROUNDMAN	08/30/2015	$23.93	$7.25	$1.72	$0.00	$32.90
OUTSIDE ELECTRICAL WORKERS - EAST LOCAL 104	08/28/2016	$24.39	$7.50	$1.73	$0.00	$33.62
	09/03/2017	$24.88	$7.75	$1.75	$0.00	$34.38
For apprentice rates see "Apprentice- LINEMAN"						
GROUNDMAN -Inexperienced (<2000 Hrs.)	08/30/2015	$19.58	$7.25	$1.59	$0.00	$28.42
OUTSIDE ELECTRICAL WORKERS - EAST LOCAL 104	08/28/2016	$19.96	$7.50	$1.60	$0.00	$29.06
	09/03/2017	$20.35	$7.75	$1.61	$0.00	$29.71
For apprentice rates see "Apprentice- LINEMAN"						
JOURNEYMAN LINEMAN	08/30/2015	$43.51	$7.25	$15.06	$0.00	$65.82
OUTSIDE ELECTRICAL WORKERS - EAST LOCAL 104	08/28/2016	$44.35	$7.50	$15.83	$0.00	$67.68
	09/03/2017	$45.23	$7.75	$16.61	$0.00	$69.59

Classification	Effective Date	Base Wage	Health	Pension	Supplemental Unemployment	Total Rate

Apprentice - *LINEMAN (Outside Electrical) - East Local 104*

Effective Date - 08/30/2015

Step	percent	Apprentice Base Wage	Health	Pension	Supplemental Unemployment	Total Rate
1	60	$26.11	$7.25	$3.28	$0.00	$36.64
2	65	$28.28	$7.25	$3.35	$0.00	$38.88
3	70	$30.46	$7.25	$3.41	$0.00	$41.12
4	75	$32.63	$7.25	$4.98	$0.00	$44.86
5	80	$34.81	$7.25	$5.04	$0.00	$47.10
6	85	$36.98	$7.25	$5.11	$0.00	$49.34
7	90	$39.16	$7.25	$7.17	$0.00	$53.58

Effective Date - 08/28/2016

Step	percent	Apprentice Base Wage	Health	Pension	Supplemental Unemployment	Total Rate
1	60	$26.61	$7.50	$3.30	$0.00	$37.41
2	65	$28.83	$7.50	$3.36	$0.00	$39.69
3	70	$31.05	$7.50	$3.43	$0.00	$41.98
4	75	$33.26	$7.50	$5.00	$0.00	$45.76
5	80	$35.48	$7.50	$5.06	$0.00	$48.04
6	85	$37.70	$7.50	$5.13	$0.00	$50.33
7	90	$39.92	$7.50	$7.20	$0.00	$54.62

Notes:

Apprentice to Journeyworker Ratio:1:2

TELEDATA CABLE SPLICER *OUTSIDE ELECTRICAL WORKERS - EAST LOCAL 104*	01/01/2016	$28.98	$4.25	$3.12	$0.00	$36.35
TELEDATA LINEMAN/EQUIPMENT OPERATOR *OUTSIDE ELECTRICAL WORKERS - EAST LOCAL 104*	01/01/2016	$27.31	$4.25	$3.07	$0.00	$34.63
TELEDATA WIREMAN/INSTALLER/TECHNICIAN *OUTSIDE ELECTRICAL WORKERS - EAST LOCAL 104*	01/01/2016	$27.31	$4.25	$3.07	$0.00	$34.63
TREE TRIMMER *OUTSIDE ELECTRICAL WORKERS - EAST LOCAL 104*	01/31/2016	$18.51	$3.55	$0.00	$0.00	$22.06

This classification applies only to tree work done: (a) for a utility company, R.E.A. cooperative, or railroad or coal mining company, and (b) for the purpose of operating, maintaining, or repairing the utility company's equipment, and (c) by a person who is using hand or mechanical cutting methods and is not on the ground. This classification does not apply to wholesale tree removal.

TREE TRIMMER GROUNDMAN *OUTSIDE ELECTRICAL WORKERS - EAST LOCAL 104*	01/31/2016	$16.32	$3.55	$0.00	$0.00	$19.87

This classification applies only to tree work done: (a) for a utility company, R.E.A. cooperative, or railroad or coal mining company, and (b) for the purpose of operating, maintaining, or repairing the utility company's equipment, and (c) by a person who is using hand or mechanical cutting methods and is on the ground. This classification does not apply to wholesale tree removal.

Classification	Effective Date	Base Wage	Health	Pension	Supplemental Unemployment	Total Rate

Additional Apprentice Information:

Minimum wage rates for apprentices employed on public works projects are listed above as a percentage of the pre-determined hourly wage rate established by the Commissioner under the provisions of the M.G.L. c. 149, ss. 26-27D. Apprentice ratios are established by the Division of Apprenticeship Training pursuant to M.G.L. c. 23, ss. 11E-11L.

All apprentices must be registered with the Division of Apprenticeship Training in accordance with M.G.L. c. 23, ss. 11E-11L.

All steps are six months (1000 hours.)
Ratios are expressed in allowable number of apprentices to journeymen or fraction thereof, unless otherwise specified.

** Multiple ratios are listed in the comment field.
*** APP to JM; 1:1, 2:2, 2:3, 3:4, 4:4, 4:5, 4:6, 5:7, 6:7, 6:8, 6:9, 7:10, 8:10, 8:11, 8:12, 9:13, 10:13, 10:14, etc.
**** APP to JM; 1:1, 1:2, 2:3, 2:4, 3:5, 4:6, 4:7, 5:8, 6:9, 6:10, 7:11, 8:12, 8:13, 9:14, 10:15, 10:16, etc.

The Massachusetts Prevailing Wage Law
M.G.L. ch. 149, §§ 26 – 27

NOTICE TO AWARDING AUTHORITIES

- 'The enclosed wage schedule applies only to the specific project listed at the top and will be updated for any public construction project lasting longer than one (1) year.
- 'You should request an updated wage schedule from the Division of Occupational Safety if you have not opened bids or selected a contractor within 90 days of the date of issuance of the enclosed wage schedule.
- 'The wage schedule shall be incorporated in any advertisement or call for bids for the project for which it has been issued.
- 'Once a contractor has been selected by the awarding authority, the wage schedule shall be made a part of the contract for that project.

NOTICE TO CONTRACTORS

- The enclosed wage schedule, and any updated schedule, must be posted in a conspicuous place at the work site during the life of the project.
- The wages listed on the enclosed wage schedule must be paid to employees on public works projects regardless of whether they are employed by the prime contractor, a filed sub-bidder, or any sub-contractor.
- The enclosed wage schedule applies to all phases of the project including the final clean-up. Contractors whose only role is to perform final clean-up must pay their employees according to this wage schedule.
- All apprentices must be registered with the Massachusetts Division of Apprentice Training in order to be paid at the reduced apprentice rates. If a worker is not registered with the Division of Apprentice Training, they must be paid the “total rate” listed on the wage schedule regardless of experience or skill level. For further information, please call (617) 727-3486 or write to the Division of Apprentice Training, 399 Washington Street, 4th Floor, Boston, MA 02108

WEEKLY PAYROLL RECORDS REPORT
& STATEMENT OF COMPLIANCE

In accordance with Massachusetts General Law c149, §27B, a true and accurate record must be kept of all persons employed on the public works project for which the enclosed rates have been provided. A Payroll Form has been printed on the reverse of this page and includes all the information required to be kept by law. Every contractor or subcontractor is required to keep these records and preserve them for a period of three years from the date of completion of the contract.

In addition, every contractor and subcontractor is required to submit a copy of their weekly payroll records to the awarding authority. This is required to be done on a weekly basis. Once collected, the awarding authority is also required to preserve those records for three years.

In addition, each such contractor, subcontractor or public body shall furnish to the Department of Labor & Workforce Development/Division of Occupational Safety within fifteen days after completion of its portion of the work a statement, executed by the contractor, subcontractor or public body who supervises the payment of wages, in the following form:

STATEMENT OF COMPLIANCE

_____, 2016

I,_____,_____
(Name of signatory party) (Title)
do hereby state:
That I pay or supervise the payment of the persons employed by
_____ on the _____
(Contractor, subcontractor or public body) (Building or project)
and that all mechanics and apprentices, teamsters, chauffeurs and laborers employed on said project have been paid in accordance with wages determined under the provisions of sections twenty-six and twenty-seven of chapter one hundred and forty nine of the General Laws.

Signature _____

Title _____

DIVISION OF OCCUPATIONAL SAFETY, 399 WASHINGTON STREET, 5TH FL., BOSTON, MA. 02108

WEEKLY PAYROLL REPORT FORM

Company Name:

Project Name:

Awarding Auth.:

Work Week Ending:

Prime Contractor

Subcontractor
List Prime Contractor:

Employer Signature:

Print Name & Title:

Employee Name & Address	Work Classification	Hours Worked							(A) Tot. Hrs.	(B) Hourly Base Wage	Employer Contributions			(F) [B+C+D+E] Hourly Total Wage (prev. wage)	(G) [A*F] Weekly Total Amount
											(C) Health & Welfare	(D) Pension	(E) Supp. Unemp		
		S	M	T	W	T	F	S							

NOTE: Every contractor and subcontractor is required to submit a copy of their weekly payroll records to the awarding authority.

Permit Number _____

Date Issued _____

Expiration Date_____

Fee: $50 x _____=_____
Trenches Total

City of Newton

Massachusetts 02459

Engineering Division

Phone (617) 796-1020

FAX (617) 796-1051

TRENCH PERMIT
Pursuant to G.L. c. 82A §1 and 520 CMR 7.00 et seq.(as amended)

THIS PERMIT MUST BE FULLY COMPLETED PRIOR TO CONSIDERATION

Name of Applicant **Street Address**			**Phone** **Cell**
City/Town	**MA**	**ZIP**	
Name of Excavator (if different from applicant) **Street Address**			**Phone** **Cell**
City/Town	**MA**	**ZIP**	
Name of Owner(s) of Property **Street Address**			**Phone** **Cell**
City/Town	**MA**	**ZIP**	
Other Contact		**Permit Fee Received No ( ) Yes ( )**	
Description, location and purpose of proposed trench: **Please describe the exact location of the proposed trench and its purpose (include a description of what is (or is intended) to be laid in proposed trench (e.g.; pipes/cable lines etc.) Please use reverse side if additional space is needed.**			
Insurance Certificate #:			
Name and Contact Information of Insurer:			

Policy Expiration Date:	
Dig Safe #:	
Name of Competent Person (as defined by 520 CMR 7.02):	
Massachusetts Hoisting License # **License Grade:**	**Expiration Date:**

BY SIGNING THIS FORM, THE APPLICANT, OWNER, AND EXCAVATOR ALL ACKNOWLEDGE AND CERTIFY THAT THEY ARE FAMILIAR WITH, OR, BEFORE COMMENCEMENT OF THE WORK, WILL BECOME FAMILIAR WITH, ALL LAWS AND REGULATIONS APPLICABLE TO WORK PROPOSED, INCLUDING OSHA REGULATIONS, G.L. c. 82A, 520 CMR 7.00 et seq., AND ANY APPLICABLE MUNICIPAL ORDINANCES, BY-LAWS AND REGULATIONS AND THEY COVENANT AND AGREE THAT ALL WORK DONE UNDER THE PERMIT ISSUED FOR SUCH WORK WILL COMPLY THEREWITH IN ALL RESPECTS AND WITH THE CONDITIONS SET FORTH BELOW.

THE UNDERSIGNED OWNER AUTHORIZES THE APPLICANT TO APPLY FOR THE PERMIT AND THE EXCAVATOR TO UNDERTAKE SUCH WORK ON THE PROPERTY OF THE OWNER, AND ALSO, FOR THE DURATION OF CONSTRUCTION, AUTHORIZES PERSONS DULY APPOINTED BY THE MUNICIPALITY TO ENTER UPON THE PROPERTY TO MONITOR AND INSPECT THE WORK FOR CONFORMITY WITH THE CONDITIONS ATTACHED HERETO AND THE LAWS AND REGULATIONS GOVERING SUCH WORK.

THE UNDERSIGNED APPLICANT, OWNER AND EXCAVATOR AGREE JOINTLY AND SEVERALLY TO REIMBURSE THE MUNICIPALITY FOR ANY AND ALL COSTS AND EXPENSES INCURRED BY THE MUNICIPALITY IN CONNECTION WITH THIS PERMIT AND THE WORK CONDUCTED THEREUNDER, INCLUDING BUT NOT LIMITED TO ENFORCING THE REQUIREMENTS OF STATE LAW AND CONDITIONS OF THIS PERMIT, INSPECTIONS MADE TO ASSURE COMPLIANCE THEREWITH, AND MEASURES TAKEN BY THE MUNICIPALITY TO PROTECT THE PUBLIC WHERE THE APPLICANT OWNER OR EXCAVATOR HAS FAILED TO COMPLY THEREWITH INCLUDING POLICE DETAILS AND OTHER REMEDIAL MEASURES DEEMED NECESSARY BY THE MUNICIPALITY.

THE UNDERSIGNED APPLICANT, OWNER AND EXCAVATOR AGREE JOINTLY AND SEVERALLY TO DEFEND, INDEMNIFY, AND HOLD HARMLESS THE MUNICIPALITY AND ALL OF ITS AGENTS AND EMPLOYEES FROM ANY AND ALL LIABILITY, CAUSES OR ACTION, COSTS, AND EXPENSES RESULTING FROM OR ARISING OUT OF ANY INJURY, DEATH, LOSS, OR DAMAGE TO ANY PERSON OR PROPERTY DURING THE WORK CONDUCTED UNDER THIS PERMIT.

APPLICANT SIGNATURE

_____ DATE _____

EXCAVATOR SIGNATURE (IF DIFFERENT)

_____ DATE _____

OWNER'S SIGNATURE (IF DIFFERENT)

_____ DATE:_____

For City/Town use -- Do not write in this section	
PERMIT APPROVED BY	**$_____ Application Fee**
PERMITTING AUTHORITY **Date**	
CONDITIONS OF APPROVAL	

CONDITIONS AND REQUIREMENTS PURSUANT TO G.L.C.82A AND 520 CMR 7.00 et seq. (as amended)

By signing the application, the applicant understands and agrees to comply with the following:

i. No trench may be excavated unless the requirements of sections 40 through 40D of chapter 82, and any accompanying regulations, have been met and this permit is invalid unless and until said requirements have been complied with by the excavator applying for the permit including, but not limited to, the establishment of a valid excavation number with the underground plant damage prevention system as said system is defined in section 76D of chapter 164 (DIG SAFE);
ii. Trenches may pose a significant health and safety hazard. Pursuant to Section 1 of Chapter 82 of the General Laws, an excavator shall not leave any open trench unattended without first making every reasonable effort to eliminate any recognized safety hazard that may exist as a result of leaving said open trench unattended. Excavators should consult regulations promulgated by the Department of Public Safety in order to familiarize themselves with the recognized safety hazards associated with excavations and open trenches and the procedures required or recommended by said department in order to make every reasonable effort to eliminate said safety hazards which may include covering, barricading or otherwise protecting open trenches from accidental entry.
iii. Persons engaging in any in any trenching operation shall familiarize themselves with the federal safety standards promulgated by the Occupational Safety and Health Administration on excavations: 29 CFR 1926.650 et.seq., entitled Subpart P "Excavations".
iv. Excavators engaging in any trenching operation who utilize hoisting or other mechanical equipment subject to chapter 146 shall only employ individuals licensed to operate said equipment by the Department of Public Safety pursuant to said chapter and this permit must be presented to said licensed operator before any excavation is commenced;
v. By applying for, accepting and signing this permit, the applicant hereby attests to the following: (1) that they have read and understands the regulations promulgated by the Department of Public Safety with regard to construction related excavations and trench safety; (2) that he has read and understands the federal safety standards promulgated by the Occupational Safety and Health Administration on excavations: 29 CMR 1926.650 et seq., entitled Subpart P "Excavations" as well as any other excavation requirements established by this municipality; and (3) that he is aware of and has, with regard to the proposed trench excavation on private property or proposed excavation of a city or town public way that forms the basis of the permit application, complied with the requirements of sections 40-40D of chapter 82A.
vi. This permit shall be posted in plain view on the site of the trench.

Summary of Excavation and Trench Safety Regulation (520 CMR 14.00 et seq.)

This summary was prepared by the Massachusetts Department of Public Safety pursuant to G.L.c.82A and does not include all requirements of the 520 CMR 14.00. To view the full regulation and G.L.c.82A, go to www/mass.gov/dps

Pursuant to M.G.L. c. 82, § 1, the Department of Public Safety, jointly with the Division of Occupational Safety, drafted regulations relative to trench safety. The regulation is codified in section 14.00 of title 520 of the Code of Massachusetts Regulations. The regulation requires all excavators to obtain a permit prior to the excavation of a trench made for a construction-related purpose on public or private land or rights-of-way. All municipalities must establish a local permitting authority for the purpose of issuing permits for trenches within their municipality. Trenches on land owned or controlled by a public (state) agency requires a permit to be issued by that public agency unless otherwise designated.

In addition to the permitting requirements mandated by statute, the trench safety regulations require that all excavators, whether public or private, take specific precautions to protect the general public and prevent unauthorized access to unattended trenches. Accordingly, unattended trenches must be covered, barricaded or backfilled. Covers must be road plates at least ¾" thick or equivalent; barricades must be fences at least 6' high with no openings greater than 4" between vertical supports; backfilling must be sufficient to eliminate the trench. Alternatively, excavators may choose to attend trenches at all times, for

instance by hiring a police detail, security guard or other attendant who will be present during times when the trench will be unattended by the excavator.

The regulations further provide that local permitting authorities, the Department of Public Safety, or the Division of Occupational Safety may order an immediate shutdown of a trench in the event of a death or serious injury; the failure to obtain a permit; or the failure to implement or effectively use adequate protections for the general public. The trench shall remain shutdown until re-inspected and authorized to re-open provided, however, that excavators shall have the right to appeal an immediate shutdown. Permitting authorities are further authorized to suspend or revoke a permit following a hearing. Excavators may also be subject to administrative fines issued by the Department of Public Safety for identified violations.

For additional information please visit the Department of Public Safety's website at www.mass.gov/dps

Summary of 1926 CFR Subpart P -OSHA Excavation Standard

This is a worker protection standard, and is designed to protect employees who are working inside a trench. This summary was prepared by the Massachusetts Division of Occupational Safety and not OSHA for informational purposes only and does not constitute an official interpretation by OSHA of their regulations, and may not include all aspects of the standard.

For further information or a full copy of the standard go to www.osha.gov.

- **Trench Definition per the OSHA standard:**
  - An excavation made below the surface of the ground, narrow in relation to its length.
  - In general, the depth is greater than the width, but the width of the trench is not greater than fifteen feet.
- **Protective Systems** to prevent soil wall collapse are always required in trenches deeper than 5', and are also required in trenches less than 5' deep when the competent person determines that a hazard exists. Protection options include:
  - Shoring. Shoring must be used in accordance with the OSHA Excavation standard appendices, the equipment manufacturer's tabulated data, or designed by a registered professional engineer.
  - Shielding (Trench Boxes). Trench boxes must be used in accordance with the equipment manufacturer's tabulated data, or a registered professional engineer.
  - Sloping or Benching. In Type C soils (what is most typically encountered) the excavation must extend horizontally 1 ½ feet for every foot of trench depth on both sides, 1 foot for Type B soils, and ¾ foot for Type A soils.
  - A registered professional engineer must design protective systems for all excavations greater than 20' in depth.
- **Ladders** must be used in trenches deeper than 4'.
  - Ladders must be inside the trench with workers at all times, and located within 25' of unobstructed lateral travel for every worker in the trench.
  - Ladders must extend 3' above the top of the trench so workers can safely get onto and off of the ladder.
- **Inspections** of every trench worksite are required:
  - Prior to the start of each shift, and again when there is a change in conditions such as a rainstorm.
  - Inspections must be conducted by the competent person (see below).
- **Competent Person(s) is:**
  - Capable (i.e., trained and knowledgeable) in identifying existing and predictable hazards in the trench, and other working conditions which may pose a hazard to workers, and
  - Authorized by management to take necessary corrective action to eliminate the hazards. Employees must be removed from hazardous areas until the hazard has been corrected.
- **Underground Utilities** must be:
  - Identified prior to opening the excavation (e.g., contact Digsafe).
  - Located by safe and acceptable means while excavating.
  - Protected, supported, or removed once exposed.
- **Spoils** must be kept back a minimum of 2' from the edge of the trench.
- **Surface Encumbrances** creating a hazard must be removed or supported to safeguard employees. Keep heavy equipment and heavy material as far back from the edge of the trench as possible.
- **Stability of Adjacent Structures:**
  - Where the stability of adjacent structures is endangered by creation of the trench, they must be underpinned, braced, or otherwise supported.
  - Sidewalks, pavements, etc. shall not be undermined unless a support system or other method of protection is provided.

- **Protection from water accumulation hazards:**
  - It is not allowable for employees to work in trenches with accumulated water. If water control such as pumping is used to prevent water accumulation, this must be monitored by the competent person.
  - If the trench interrupts natural drainage of surface water, ditches, dikes or other means must be used to prevent this water from entering the excavation.
- **Additional Requirements:**
  - For mobile equipment operated near the edge of the trench, a warning system such as barricades or stop logs must be used.
  - Employees are not permitted to work underneath loads. Operators may not remain in vehicles being loaded unless vehicles are equipped with adequate protection as per 1926.601(b)(6).
  - Employees must wear high-visibility clothing in traffic work zones.
  - Air monitoring must be conducted in trenches deeper than 4' if the potential for a hazardous atmosphere exists. If a hazardous atmosphere is found to exist (e.g., O_2 <19.5% or >23.5%, 20% LEL, specific chemical hazard), adequate protections shall be taken such as ventilation of the space.
  - Walkways are required where employees must cross over the trench. Walkways with guardrails must be provided for crossing over trenches > 6' deep.
  - Employees must be protected from loose rock or soil through protections such as scaling or protective barricades.

END OF SECTION

ITEM SHEETS

The Contractor shall insert prices for each item in ink, in both words and figures, and is to show a total bid price. In the event a discrepancy between the written words and figures, the written words shall govern. In the event an error in the bidders total bid price, the corrected total bid obtained by the summation of the products of the unit prices multiplied by the respective quantities shall stand as the bidder's total bid price.

The Contractor is required to review any related plans, conduct a full site review, and read all the provisions in the document before inserting prices, and is further advised to make his own determination as to the accuracy of the estimated quantities before inserting bid prices.

The estimated quantities shown here are based solely upon a reasonable assessment of the project parameters, thus the Contractor is advised that the actual quantities may vary substantially as field conditions may necessitate. Regardless of the amount of the actual quantities, the unit price(s) shall be that set forth in the Bidder's Item Sheets.

ITEM DESCRIPTION & BID PRICE	ESTIMATED QUANTIY	UNIT	TOTAL COST
ITEM: **0.303FC - FUEL COSTS*** • * Bidder's may elect **NOT** to bid the FUEL COSTS separately by inserting the term **N/A** *(i.e. Not Applicable)* in all entry lines of this Item .303FC. Inserting "N/A" is **a mandatory requirement** to verify the Contractor has waived its option to bid the cost of fuel(s) separately and has instead elected to factor their collective fuel costs for the sidewalk construction operations into the bid price of **Items** **_____.** • **Contractor's choosing to bid this line item must NOT include the cost of fuel in Items _____** • The City of Newton reserves the right to validate the Contractor's fuel consumption information before and after awarding the bid. ---------- **0.303FC = total combined number of gallons of Fuel (Diesel & Gasoline) to _____:** (IN WORDS)_____ Gallons Per Cubic Yard (IN FIGURES)_____ Gallons Per Cubic Yard (**_____Gallons per C.Y**) **x** (**$ 1.896 /Gallon**) **x** ***^ Base Price^*** ***of diesel and gasoline = BPF*** ***Per Mass Highway***	**400**	**C.Y.**	Note: This factored value is for the **Comparison of Bids Only**. (See Spec. Prov.) $_____
Item: 0.303LA- DIFFERENTIAL FOR LIQUID ASPHALT (Informational Note: For the purpose of this program One (1) Ton of Hot mix asphalt shall contain six-hundredths (. 06) Ton of Liquid Asphalt) The Base Price for Liquid Asphalt is:	**N/A**	**N/A**	The Base Price (BPLA) shown here shall be used to determine the monthly price differential

ITEM DESCRIPTION & BID PRICE	ESTIMATED QUANTIY	UNIT	TOTAL COST
$_____340.00_____ Per Ton of Liquid Asphalt ***^Base Price of Liquid Asphalt (BPLA)^*** *Per Mass* ***Highway***			(See Spec. Prov.) **N/A**
ITEM: **102.01 – SELECTIVE CLEARING AND GRUBBING** THE SUM OF: _____ DOLLARS AND_____ CENTS ($_____) PER SQUARE YARD	**25**	**S.Y.**	$_____
ITEM 102.51– TREE PROTECTION THE SUM OF: _____ DOLLARS AND_____ CENTS ($_____) PER EACH	**35**	**EA**	$_____
ITEM: **105 – STUMP REMOVED** THE SUM OF: _____ DOLLARS AND_____ CENTS ($_____) PER EACH	**10**	**EA**	$_____
ITEM: **120.1 – UNCLASSIFIED EXCAVATION** THE SUM OF: _____ DOLLARS AND_____ CENTS ($_____) PER SQUARE YARD	**25**	**S.Y.**	$_____
ITEM: **470.2 – HOT MIX ASPHALT BERM** THE SUM OF: _____ DOLLARS AND_____ CENTS ($_____) PER LINEAR FOOT	**750**	**L.F.**	$_____

ITEM DESCRIPTION & BID PRICE	ESTIMATED QUANTIY	UNIT	TOTAL COST
ITEM: **472 – HOT MIX ASPHALT FOR MISCELLANEOUS WORK** THE SUM OF: _____ DOLLARS AND_____ CENTS ($_____) PER SQUARE YARD	**60**	**TON**	$_____
ITEM: **482 – SAWCUTTING** THE SUM OF: _____ DOLLARS AND_____ CENTS ($_____) PER LINEAR FOOT	**3500**	**L.F.**	$_____
ITEM: **501.1 – GRANITE CURB TYPE VA1 – CURVED (WITH CDF EMBEDMENT) (INCLUDES WHEELCHAIR RAMP WORK)** THE SUM OF: _____ DOLLARS AND_____ CENTS ($_____) PER LINEAR FOOT	**100**	**L.F.**	$_____
ITEM: **504 – GRANITE CURB TYPE VA4 – STRAIGHT (WITH CDF EMBEDMENT) (INCLUDES 'ISOLATED' INSTALLATIONS & WHEELCHAIR RAMP WORK)** THE SUM OF: _____ DOLLARS AND_____ CENTS ($_____) PER LINEAR FOOT	**175**	**L.F.**	$_____
ITEM: **516 – GRANITE CURB CORNER TYPE A** THE SUM OF: _____ DOLLARS AND_____ CENTS ($_____) PER EACH	**10**	**EA.**	$_____
ITEM**: 580 – CURB REMOVED AND RESET (INCLUDES CURB WORK REQ'D FOR WHEELCHAIR RAMPS)** THE SUM OF: _____ DOLLARS AND_____ CENTS ($_____) PER LINEAR FOOT	**1900**	**L.F.**	$_____

ITEM DESCRIPTION & BID PRICE	ESTIMATED QUANTIY	UNIT	TOTAL COST
ITEM: 701 – **CEMENT CONCRETE SIDEWALK WITH LAMPBLACK (@ 2 POUNDS PER CUBIC YARD)** THE SUM OF: _____ DOLLARS AND_____ CENTS ($_____) PER SQUARE YARD	**925**	**S.Y.**	$_____
ITEM: **701.1 – CEMENT CONCRETE SIDEWALK AT DRIVEWAYS WITH LAMPBLACK (@ 2 POUNDS PER CUBIC YARD)** THE SUM OF: _____ DOLLARS AND_____ CENTS ($_____) PER SQUARE YARD	**250**	**S.Y.**	$_____
ITEM: **701.2 – CEMENT CONCRETE WHEELCHAIR RAMP** THE SUM OF: _____ DOLLARS AND_____ CENTS ($_____) PER SQUARE YARD	**1150**	**S.Y.**	$_____
ITEM: **702– HOT MIX ASPHALT WALK SURFACE** THE SUM OF: _____ DOLLARS AND_____ CENTS ($_____) PER SQUARE YARD	**350**	**S.Y.**	$_____
ITEM: **703 – HOT MIX ASPHALT DRIVEWAY** THE SUM OF: _____ DOLLARS AND_____ CENTS ($_____) PER SQUARE YARD	**200**	**S.Y.**	$_____

ITEM: **704 – DETECTABLE WARNING PANEL FOR WHEELCHAIR RAMP** THE SUM OF: _____ DOLLARS AND_____ CENTS ($_____) PER EACH	**75**	**EA**	$_____
ITEM: **706.1 – STONE WALK REMOVED AND RESET** THE SUM OF: _____ DOLLARS AND_____ CENTS ($_____) PER SQUARE YARD	**25**	**S.Y.**	$_____
ITEM: **710.1 – GRANITE BOUNDS** THE SUM OF: _____ DOLLARS AND_____ CENTS ($_____) PER SQUARE YARD	**15**	**EA**	$_____
ITEM: **748 - MOBILIZATION FOR ALL WORK ZONES (SURVEY SERVICES,CONFERENCES, VIDEO FILE, NOTIFICATIONS, ETC.)** **THE CONTRACTOR IS TO FACTOR THE COST OF MOBILIZATION INTO THE INDIVIDUAL BID PRICES AS HE DEEMS APPROPRIATE. THERE WILL BE NO SEPARATE PAYMENT FOR MOBILIZATION**	**NA**	**NA**	NA
ITEM: **751 – LOAM BORROW** THE SUM OF: _____ DOLLARS AND_____ CENTS ($_____) PER SQUARE YARD	**350**	**S.Y.**	$_____
ITEM: **998 – MISCELLANEOUS WORK ALLOWANCE** **THE SUM OF:** **TEN THOUSAND _____ DOLLARS** **AND___ZERO_____ CENTS** **($ 10,000)**	**1**	**ALL**	**$10,000**

ITEM: **999 – ALLOWANCE FOR PAYMENT OF POLICE OFFICERS** **THE SUM OF:** **TWENTY FIVE THOUSAND _____ DOLLARS** **AND___ZERO_____ CENTS** **($ 25,000)**	**1**	**ALL**	**$25,000**

TOTAL BID: _____

The Total for all items on this page must be inserted in Paragraph "C" of the BID FORM.

- The scheduling of this work shall be solely at the discretion of the Engineer.
- The scope of the work is subject to modification as the operations progress. In addition, the day-to-day operational aspects may also be subject to modification as the Engineer shall so direct (i.e. final depth, dates & scheduled periods, length of sidewalks).

END OF SECTION

SECTION 1

SCOPE OF WORK

Description

The proposed project involves the construction and repair of various sections of sidewalk around the city of Newton, Massachusetts. The scope of new sidewalk and driveway apron construction measures approximately **2000 square yards**. The contractor shall also be asked to construct **75new handicap ramps** and **remove tree stumps**. All items shall be constructed per the City of Newton "General Construction Details" dated March 2003 and as directed by the Engineer.

PROPOSED CEMENT CONCRETE SIDEWALK AND DRIVEWAY APRON LOCATIONS

See attached diagrams for proposed Sidewalk Location.

SPECIAL CONSIDERATIONS:

A. The project may require construction in areas occupied by business owners, employees and customers.
B. Contractor must accommodate customers visiting businesses adjacent to the work zone at all times.
C. Pedestrian access and safety around the construction area is the responsibility of the Contractor at all times. This includes maintaining protective barriers, barrels, cones, caution tape around the construction zone as directed by the Engineer. These safety measures shall be considered incidental to the project.
D. Upon completion of the work the affected areas, including areas within the businesses disturbed during construction, shall be restored to original condition.
E. The contractor shall review all project limits with the Engineer prior to commencement of work.

All work done under this contract shall be in conformance with the City of Newton Standard Specifications, the Massachusetts Highway Department Standard Specifications for Highways and Bridges, dated 1988, 2006 Massachusetts Highway Department Project Development and Design Guide dated February 25, 2010. The Standard Special Provisions, the 1977 Construction Standards and the Supplemental Drawings dated April 2003 the 2009 Manual on Uniform Traffic Control Devices, with Massachusetts Amendments, the 1990 Standard Drawings for Signs and Supports. The 1968 Standard Drawings for Traffic Signals and Highway Lighting, the latest edition of American Standard of Nursery Stock, the Plans detail sheets the Special Provisions and all amendments will govern.

All work done under this contract shall be in conformance with the Massachusetts Highway Department *Standard Specifications for Highways and Bridges* dated 1988, the *Supplemental Specifications* dated July 1, 2015, and the *Standard Special Provisions* dated June 3, 2011; the *2012 Construction Standard Details*, the *1996 Construction and Traffic Standard Details* (as relates to traffic standard details only); the *2003 Manual on Uniform Traffic Control Devices* with *Massachusetts Amendments*; the *1968 Standard Drawings for Traffic Signals and Highway Lighting*; the latest edition of *American Standard for Nursery Stock*; the Plans and these Special Provisions.

The General Conditions, Supplementary Conditions and these Special Provisions shall take precedence over the General Requirements of Division 1 of the Standard Specifications of the Massachusetts Department of Transportation (MassDOT).

If during construction operations the contractor disturbs any survey monuments (temporary or permanent) the engineer may direct the contractor to reestablish the survey monuments at no additional cost to the owner. The contractor shall be required to use a Professional Surveyor registered in the Commonwealth of Massachusetts, unless otherwise directed by the Engineer.

It shall be the responsibility of the contractor to coordinate with all third party utility companies that maybe affected by this contract. This shall include but not limited to adjustment or replacement of existing structures as directed by the appropriate utility company. The owner shall not compensate the contractor for work done on behalf of a third party.

STREETS SCHEDULED TO BE DONE UNDER THIS CONTRACT:

- The scheduling of this work shall be solely at the discretion of the Engineer.

- The scope of the work is subject to modification as the operations progress. In addition, the day-to-day operational aspects may also be subject to modification as the Engineer shall so direct (i.e. final depth, dates & scheduled periods, length of sidewalks).

- The Engineer reserves the right to designate any street and/or roadway as arterial corridors as the field conditions may warrant and/or at the time the operation is performed.

- **The contractor shall maintain a clean and orderly staging area within city limits for the duration of the project. The staging area shall be free of construction debris by the end of the week (Friday) unless receiving written permission from the Engineer. Failure to comply may result in a fine of up to $1000.00 per day per staging area.**

FIGURES

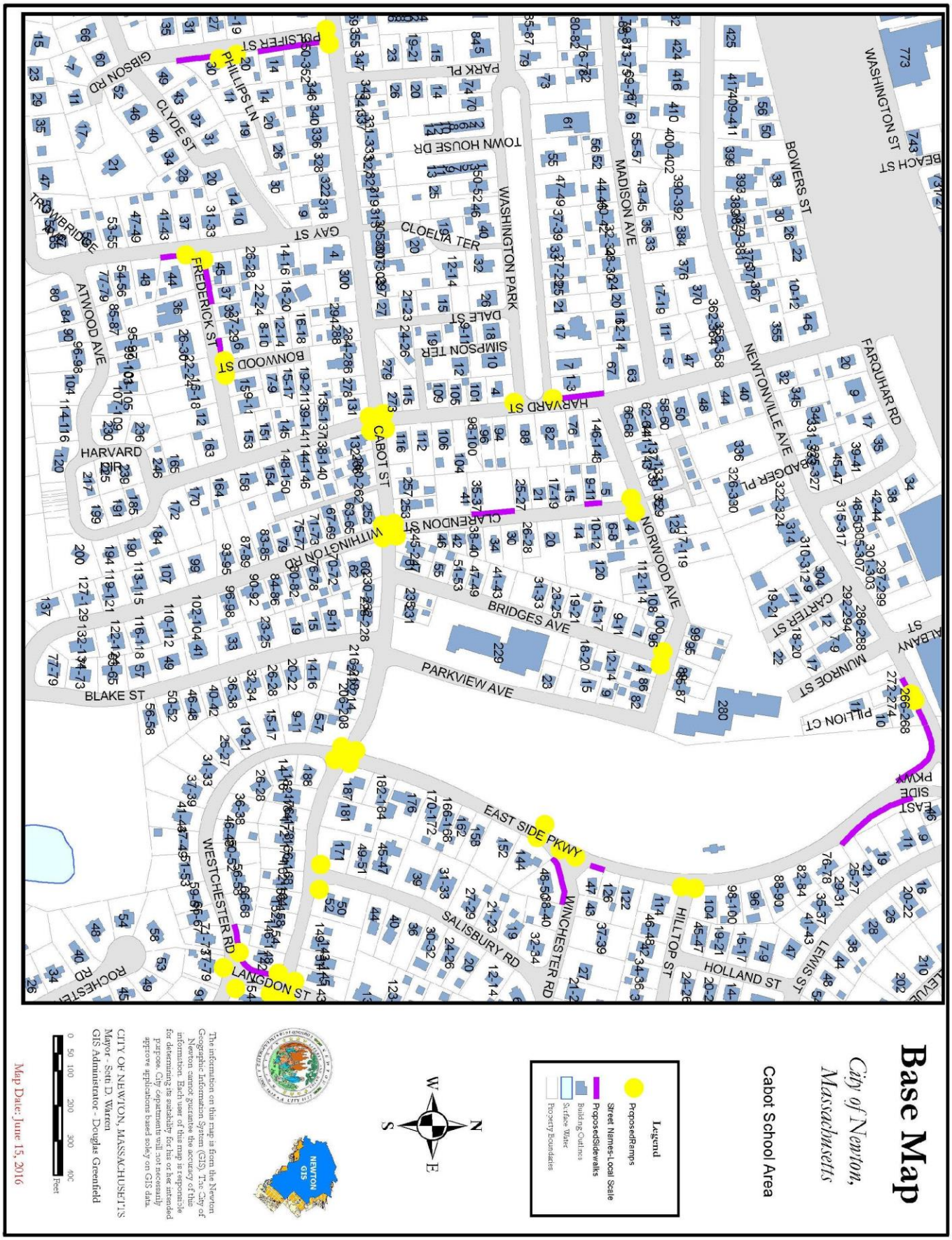
Base Map
City of Newton, Massachusetts
Cabot School Area
Legend
ProposedRamps
Street Names-Local Scale
ProposedSidewalks
Building Outlines
Surface Water
Property Boundaries
N
E
S
W
NEWTON GIS
The information on this map is from the Newton Geographic Information System (GIS). The City of Newton cannot guarantee the accuracy of this information. Each user of this map is responsible for determining its suitability for his or her intended purpose. City departments will not necessarily approve applications based solely on GIS data.
CITY OF NEWTON, MASSACHUSETTS
Mayor - Setti D. Warren
GIS Administrator - Douglas Greenfield
0 50 100 200 300 400 Feet
Map Date: June 15, 2016
WASHINGTON ST
BEACH ST
BOWERS ST
MADISON AVE
FARQUHAR RD
NEWTONVILLE AVE
GADGER PL
NORWOOD AVE
CARTER ST
MUNROE ST
ALBANY ST
PILLION CT
EAST SIDE PKWY
WINCHESTER RD
SALISBURY RD
HOLLAND ST
LEWIS ST
HILLTOP ST
LANGDON ST
WESTCHESTER RD
ROCHESTER RD
BRIDGES AVE
PARKVIEW AVE
CABOT ST
WITHINGTON RD
CLARENDON ST
HARVARD ST
WASHINGTON PARK
TOWN HOUSE DR
CLOELIA TER
SIMPSON TER
DALE ST
PARK PL
BOWWOOD ST
FREDERICK ST
GAY ST
ATWOOD AVE
BLAKE ST
HARVARD CIR
CLYDE ST
PHILLIPS LN
PFLEIFFER ST
GIBSON RD
TWIBRIDGE

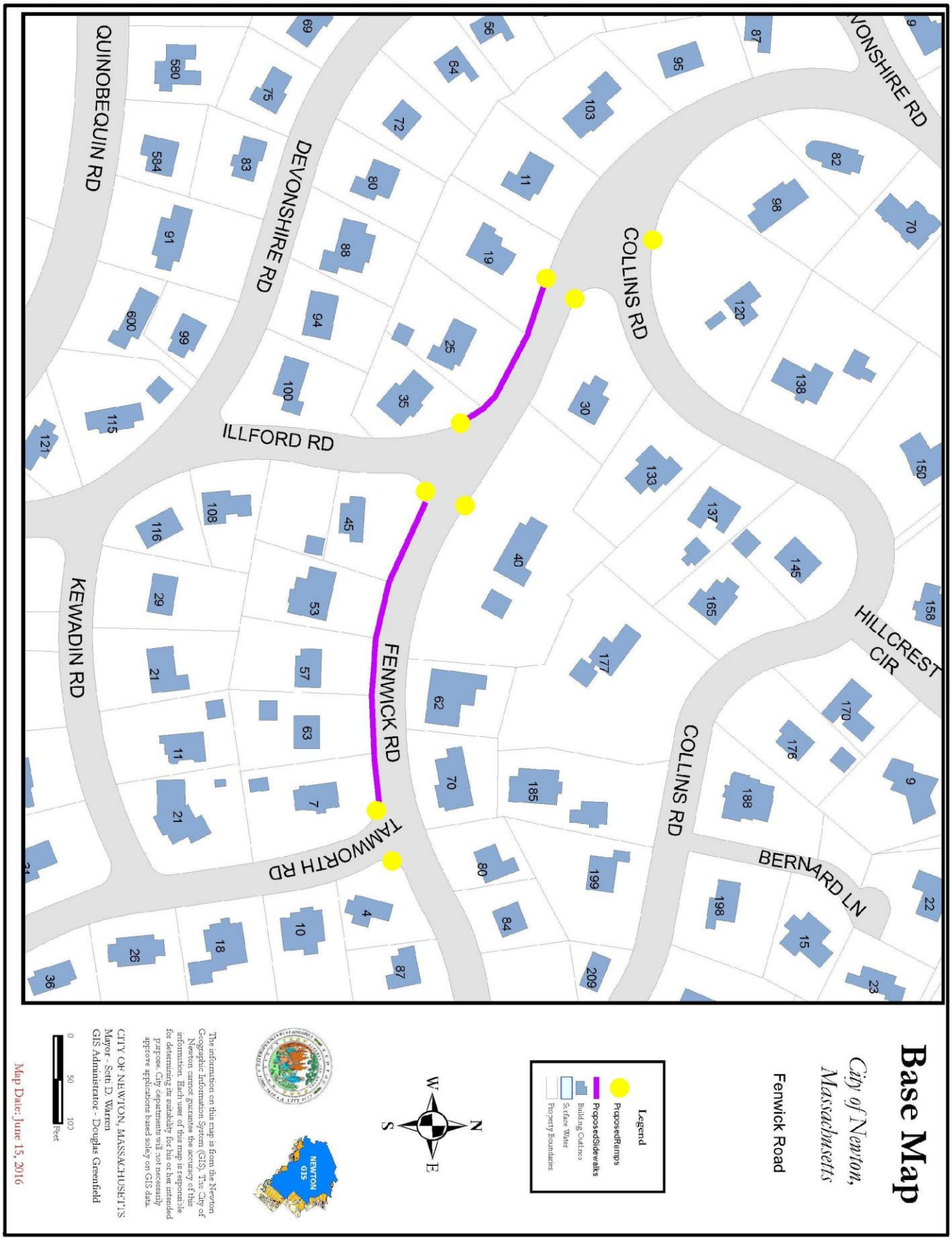
Base Map
City of Newton, Massachusetts
Fenwick Road
Legend
ProposedRamps
ProposedSidewalks
Building Outlines
Surface Water
Property Boundaries
N
E
S
W
NEWTON GIS
The information on this map is from the Newton Geographic Information System (GIS). The City of Newton cannot guarantee the accuracy of this information. Each user of this map is responsible for determining its suitability for his or her intended purpose. City departments will not necessarily approve applications based solely on GIS data.
CITY OF NEWTON, MASSACHUSETTS
Mayor - Setti D. Warren
GIS Administrator - Douglas Greenfield
0
50
100
Feet
Map Date: June 15, 2016
VONSHIRE RD
COLLINS RD
HILLCREST CIR
COLLINS RD
BERNARD LN
DEVONSHIRE RD
ILLFORD RD
FENWICK RD
TAMWORTH RD
QUINOBEQUIN RD
KEWADIN RD

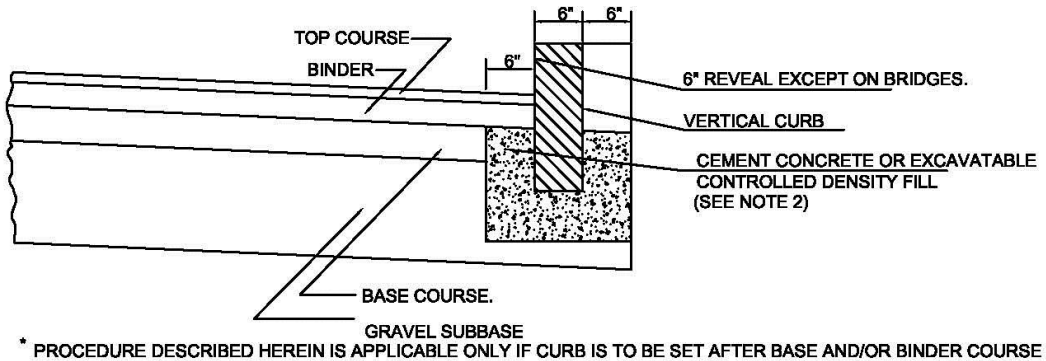

* PROCEDURE DESCRIBED HEREIN IS APPLICABLE ONLY IF CURB IS TO BE SET AFTER BASE AND/OR BINDER COURSE ARE IN PLACE OTHERWISE CEMENT CONC. WILL BE ELIMINATED AND GRAVEL BROUGHT UP TO BOTTOM OF BASE COURSE. FOR DESCRIPTION, MATERIALS AND CONSTRUCTION METHOD, SEE SPECIFICATIONS.

NOTES:
1. CUT NEAT LINE 6" FROM CURB LINE AND REMOVE BINDER, BASE AND STONE, REPLACE WITH CEMENT CONCRETE.
2. ANY CLASS CEMENT CONCRETE THAT IS ACCEPTABLE TO THE DEPT. UNDER SECTION M4 OF THE 1973 STANDARD SPECIFICATIONS; ALL TEST REQUIREMENTS ARE WAIVED. BITUMINOUS CONCRETE IS NOT TO BE USED AS A SUBSTITUTE.
3. PAYMENT FOR CEMENT CONCRETE WILL BE INCLUDED IN THE PRICE PER LINEAL FOOT OF CURBING.

METHOD OF SETTING VERTICAL CURB

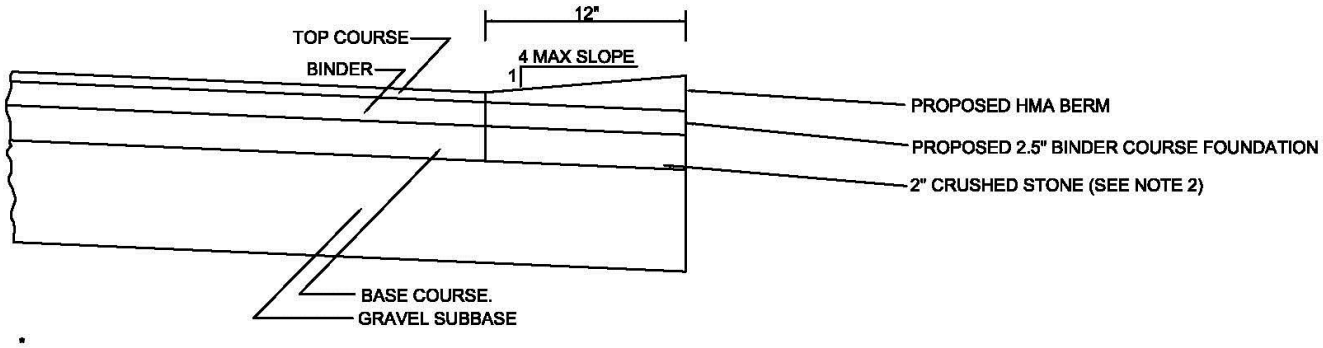

*

NOTES:
1. CUT NEAT LINE AT CURB LINE AND REMOVE BINDER, BASE AND STONE, REPLACE AS SHOWN.
2. CRUSHED STONE SHALL BE M2.01.7 PER THE STANDARD SPECIFICATION.

HOT MIX ASPHALT BERM

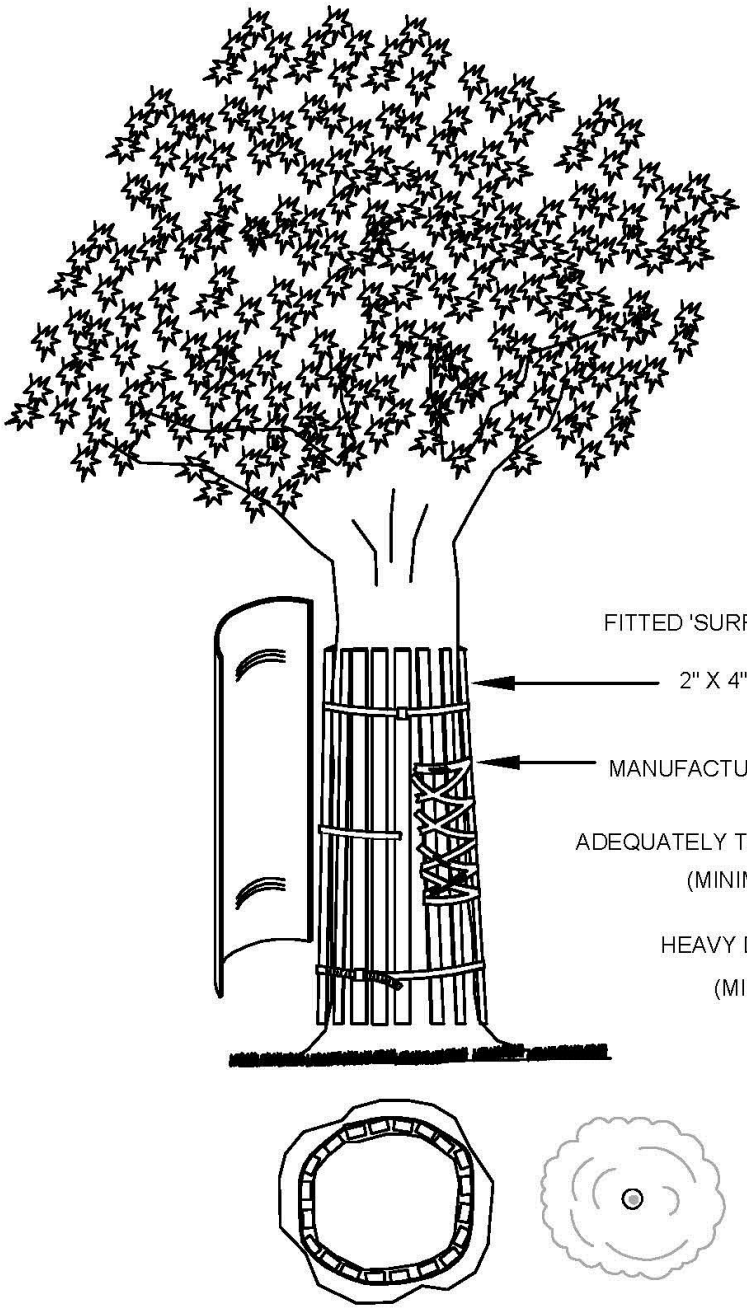

PROTECTIVE MEANS

FITTED 'SURROUND' OF SDR35 PVC PIPE SECTIONS
OR
2" X 4" X 8' RECYCLED 'TREX' PLASTIC

RETENTION MEANS

MANUFACTURED PVC SAFETY FENCE WITH 'CABLE' TIES
OR
ADEQUATELY TENSIONED METAL BANDS WITH CRIMP CLIPS
(MINIMUM OF THREE BANDS PER TREE)
OR
HEAVY DUTY NYLON CINCH ('CABLE') TIES
(MINIMUM OF 9 @ 1' ON CENTER)

TREE PROTECTION (TRUNK BANDING)
(NOT TO SCALE)

SPECIAL PROVISIONS

ITEM: **0.303FC - FUEL COSTS***

Description

*** The Contractor may elect NOT to bid the cost of fuels separately by inserting the term N/A** *(i.e. Not Applicable)* **in all entry lines of Item 0.303FC. This is a mandatory requirement to verify that the Contractor has formally waived their option to bid the cost of fuel(s) separately and has instead elected to factor into the separate bid price of the appropriate bid items.**

(a) Under this item the Contractor shall be paid for all the fuel(s) consumed in the performance of this contract.

(b) The intent of this program is to maintain a reasonable and continuous parity with the regional fluctuations that may occur in the cost of petroleum based fuel products. It is important to note that due to the numerous types of; fuel, equipment, vehicles, programs, and efficiency factors related to each of these operational elements and therefore unique to the Contractor's own enterprises, that any fuel adjustments made under this item are intended only to defray and offset extraordinary market trends in petroleum based fuel products.

(c) **IMPORTANT NOTE: An adjustment to the cost of fuels may result in an increase of payment if the fuel market has trended upward, or it may otherwise result in a decrease of payment if the fuel market has trended downward.**

(d) The City of Newton reserves the right, before awarding the Contract, to request from the Contractor a tabulated accounting of the means and methods upon which the number of gallons bid by the Contractor was derived. The intent of this evaluation is to preserve the fairness of this program by preventing bidders from placing an imbalanced bid that may ultimately cause excessive financial impact to either party. These tabulations will include, but shall not be limited to, an accounting of all related equipment and their associated manufacturers fuel consumption rates which the Contractor/supplier intends to use to complete the work under this contract. In the event the City of Newton, subsequent to performing an analysis, determines that the Contractor's bid, with regard to the consumption of fuel for **the installation of sidewalk, including the disposal of all materials** and traditionally deployed for this type of work then t**he City of Newton reserves the right to waive any informalities in any or all bids, or to reject any or all bids, if it be in the public interest to do so.**

The City of Newton reserves the right, before awarding the Contract, to request from the Contractor a tabulated accounting of the means and methods upon which the number of gallons bid by the Contractor was derived. The intent of this evaluation is to preserve the fairness of this program by preventing bidders from placing an imbalanced bid that may ultimately cause excessive financial impact to either party. These tabulations will include, but shall not be limited to, an accounting of all **transport and installation** equipment and their associated manufacturers fuel consumption rates which the Contractor/supplier intends to use to complete the work under this contract. In the event the City of Newton, subsequent to performing an analysis, determines that the Contractor's bid, with regard to the consumption of fuel per round trip for the **supply, delivery and installation of the hot mix asphalt, is excessive for the type transport equipment** traditionally deployed for this type of work then t**he City of Newton reserves the right to waive any informalities in any or all bids, or to reject any or all bids, if it be in the public interest to do so.**

(e) The Contractor shall also incorporate into their bid the amounts of fuel required for any work performed by their subcontractors or by their vendors.

Method of Administration

(f) In accordance with Chapter 303 Acts of 2008, the City of Newton shall use the most current 'new' pricing of Diesel and Gasoline fuel as they are indicated on the Mass Highway web site at the time of advertisement.

http://www.mhd.state.ma.us/default.asp?pgid=content/fuelPrices&sid=about#para24

The **average** of these two values (Diesel & Gasoline) shall serve as the value basis for determining the **Base Price** of Fuel (BPF) at the time of the advertisement. Subsequently, during the course of the contract, the **Period Price** of Fuel (PPF) shall be determined in the same manner, but at the end of each calendar month, and if the **averaged** Period Price (PPF) has either increased or decreased by more than five percentage points (5%) relative to the **averaged** Base Price of Fuel (BPF), then the cost of fuel(s) for the applicable calendar month shall be paid for at the adjusted rate, otherwise the cost of fuel(s) for the applicable calendar month shall be paid for at the initial Base Price of Fuels.

The Contractor is advised to verify these value standards and citations prior to placing their bid.

Method of Administration

(g) When a cost adjustment is applied it shall be inclusive of the five (5%) variation.

(h) Payments for fuel shall be calculated at the end of **each calendar month** and they shall be based upon the acceptable number of **square yards of hot mix asphalt cold-planed and disposed of** within that particular (applicable) calendar month in which the work was performed. **(Program Note: In the event a continuous cold-planing operation spans several days but the cold-planing & disposal activities is performed in two separate months, then two separate fuel payments shall be made).**

(i) At the end of each calendar month the Contractor shall furnish the Engineer with an accurate measured and tabular accounting which clearly shows the **collective amount of square yards cold-planed & disposed of during that particular (applicable) calendar month**. The invoiced accounting shall bear the name of the Contractor and Vendor and shall **be surrendered to the DPW Agent-In-Charge immediately upon the termination of operations at the end of each calendar month. The City will have no obligation to pay at a higher rate of fuel for any unreported work performed in any calendar month but which is subsequently forwarded after the operations for the month have ceased.**

(j) **No upward fuel adjustment will be made for any cold-planing or related activity which takes place beyond the completion date of the contract** unless the Contractor's work has been delayed due to no fault of their own (i.e. Preparation work that must be performed by others before the Contractor can complete their own tasks in the contractually allotted time.) Any such delay must be brought to the attention of the DPW Agent-In-Charge in a timely manner at which time the Agent shall investigate, verify, and document the extenuating circumstances and inform the Contractor of their decision.

Method of Payment

(k) Payment formula:

BPF = The Base Price of Fuel on the bid release date (Averaged cost of Diesel & Gasoline in $/Gallon)
PPF = The Period Price of Fuel for the applicable calendar month (Averaged cost of Diesel & Gasoline in $/Gallon)
G = Gallons of fuel bid by the Contractor to deliver and install of (1) Cubic Yard of Cement Concrete.
(Gallons bid per C.Y. for all concrete services)
SY = The total number of Cubic Yards of Cement Concrete of in the applicable calendar month

If the (PPF) <u>does not</u> exceed +/- 5% relative to the (BPF) then: (BPF) x G x SY = Fuel Payment ($)

If the (PPF) <u>does</u> exceed +/- 5% relative to the (BPF) then: (PPF) x G x SY = Fuel Payment ($)

<u>Basis of Payment</u>

*** The Contractor may elect <u>NOT</u> to bid the cost of fuels separately by inserting the term <u>N/A</u>** *(i.e. Not Applicable)* **in <u>all entry lines</u> of Item 0.303FC. This is <u>a mandatory requirement</u> to verify that the Contractor has formally waived their option to bid the cost of fuel(s) separately and has instead elected to factor into the separate bid price of the appropriate bid items.**

(l) The cost of fuel(s) consumed for the **delievery and installation of one cubic yard of cement concrete** shall be paid for under **Item 0.303FC (unless waived).** The cost of fuel used to complete the work under this contract shall be made in accordance with the applicable Period Price for Diesel & Gasoline fuels as posted for each calendar month in which the work was performed and as specified herein. The cost of fuel used to complete the work under this contract shall be made in accordance with the applicable Period Price for Diesel & Gasoline fuels as posted for each calendar month in which the work was performed**, inclusive of tack coat**, and as specified herein.

(m) The Contractor shall be responsible for disbursing fuel cost payments to their subcontractors and/or to their vendors.

(n) No payment shall be made for any fuel(s) consumed to remedy and/or to replace any deficient material supplied by the Contractor, subcontractors and/or their vendors.

Item 102.01 – SELECTIVE CLEARNING AND GRUBBING
Item 102.51 – TREE PROTECTION
Item 105 – STUMP REMOVED

<u>Description</u>

The work under these items shall consist of clearing, cutting, removal and disposal of all vegetation and debris as directed by the Engineer. The work shall also include the preservation from injury or defacement of all vegetation and objects designated by the Engineer to remain.

<u>Selective Clearing and Grubbing</u>

The stumps of all trees, brush and major roots shall be grubbed and removed in all excavation areas and under all embankments where the original ground level is within 3.5 feet of the subgrade or slope of embankments.

Trees and shrubs that are specifically designated by the Engineer not to be cut, removed, destroyed or trimmed shall be saved from harm and injury.

The contractor shall be responsible for the removal and disposal of all debris generated from these activities.

Tree Protection

Please refer to the detail found in this project manual.

<u>Stump Removed</u>

The burning of stumps shall **NOT** be permitted.

All stump removal shall conform to the specifications of this section.

The grinding and/ or removal of stumps and roots shall apply only to the portion of the stump and roots located on City property that is located in non-paved areas not covered by impervious surfaces.

Removal of the stump shall mean the grinding or excavating of all portions of the tree remaining above ground and some below ground portions following the removal of the trunk and crown of the tree. This includes ALL surface roots.

The stump and roots (below and above ground) within three feet of the stump edges must be removed to a depth of 18 inches below the surrounding grade.

All visible and non-visible roots that are above the surrounding grade beyond the requirements above must be removed to a depth of six inches below the surrounding grade. Minimally it is expected that roots will be removed at a distance of 10 feet from the edges of the stump area but may be further away depending on site conditions. The Contract Supervisor will determine the extent of the stump and root removal necessary.

All chips and debris are to be shoveled from the remaining void or hole. No stump grindings are to remain.

The void left after grinding or removal shall be immediately backfilled and graded with loam to two inches above surrounding grade to allow for settling and shall be raked smooth.

The loamed area shall be seeded with an all-purpose grass seed to be approved by the Engineer.

The Contractor shall be responsible for removal and disposal of the stump and all related debris.

The City will withhold payment for the entire tree removal unit price until the stump has been removed, loamed and seeded per these specifications. Failure to remove stump may result in liquidated damages being assessed as noted under section 11.1.

Method of Measurement

Under Item 102.01, the Contractor shall be paid per square yard of selected area cleaned and grubbed.

Under Item 102.51, the Contractor shall be paid per each tree protected.

Under Item 105 the Contractor shall be paid per each tree stump removed and shall include the major root system.

Basis of Payment

Under Item 102.01 the Contractor will be paid the contract unit price per each square yard of area cleaned and grubbed, which unit price shall include full compensation for all labor, materials, tools, loam, seed and equipment and all incidentals necessary to complete the work under this item, as shown on the plans, as required by the Engineer and as specified herein. This shall also include the cost of all arrangements to protect from harm all existing overhead or underground installations.

Under Item 102.51 the Contractor will be paid the contract unit price per each tree protected, which unit price shall include full compensation for all labor, materials, tools, loam, seed and equipment and all incidentals necessary to complete the work under this item, as shown on the plans, as required by the Engineer and as specified herein. This shall also include the cost of all arrangements to protect from harm all existing overhead or underground installations.

Under Item 105 the Contractor will be paid the contract unit price per each tree stump removal, which unit price shall include full compensation for all labor, materials, tools, loam, seed and equipment and all incidentals necessary to complete the work under this item, as shown on the plans, as required by the Engineer and as specified herein. This shall also include the cost of all arrangements to protect from harm all existing overhead or underground installations.

Item 120.1 – UNCLASSIFIED EXACAVATION

Description

This work shall consist of excavation, disposal or compaction of all materials not being removed under some other item which is encountered within the limits of the Contract in accordance with the specifications and in close conformity with the lines, grades, thicknesses and cross sections shown on the plans or established by the Engineer. All excavation will be classified as ""Unclassified Excavation", as hereafter described.

Materials from all classes of excavation which are unsuitable, and any surplus of suitable materials remaining after completing the formation of embankments, shoulders, approaches, widening of roadway or embankment slopes as directed or backfilling, will be known as waste and shall be disposed of by the Contractor outside the Right of Way at his responsibility and expense, unless otherwise directed. Waste material shall not be disposed of in the flood channel areas of any stream.

This work shall consist of all excavation not provided for elsewhere in the Contract.

CONSTRUCTION METHODS

General.

Sequence of Operations.

When required, the Contractor shall so prosecute his work that traffic will be maintained over and through the work with a maximum of safety and convenience in accordance local, state and federal regulations or as directed by the Engineer.

The sequence of all excavation operations, earth or rock, shall be such as to insure the most efficient utilization of excavated materials into embankments and the use of a minimum amount of borrow. When the plans require excavation in areas in close proximity to existing roads, structures and utilities it shall be the responsibility of the Contractor at his expense to construct suitable drainage ditches or use other satisfactory means and methods to protect and maintain the stability of such roads, and structures located immediately adjacent to but outside the limits of excavation.

The Contractor's attention is directed to the requirements of the Prevention of Water Pollution and Erosion. The Contractor shall prosecute the work as to prevent the ponding of water. Each lift of excavation shall be visibly crowned to allow drainage of surface and rain water.

Disposal of Excavated Materials

All suitable materials obtained from the excavation or from the removal of present structures shall be used either in the formation of embankments, shoulders, slopes, loam or clay hardening, etc., or for backfill under, over, or around structures, pipe culverts or drains and at such other places as directed and the material shall be placed and compacted in a manner conforming to the specifications for the particular type of work required without additional compensation.

It shall be the Contractor's responsibility to obtain from the Engineer approval for the use and placing of various materials encountered in excavation.

It shall be the Contractor's responsibility to dispose of material designated as unsuitable and any excavated material which is not required, except as noted in this subsection, outside of the Right- of-Way in such a manner as not to obstruct streams or otherwise impair the drainage, appearance, safety or efficiency of any structure or any other part of the road.

No materials from the excavation, nor from construction, shall be deposited in flood plains nor within 100 feet of any body of water without compliance under provisions of Chapter 131, Section 40 of the Massachusetts Wetlands Protection Act. Notification to the Engineer, in writing, will be required wherein such filling has been authorized by the local Conservation Commission.

No excavated material shall be placed outside of and adjacent to the Right-of-Way without the written approval of the Engineer. The Contractor shall certify in writing he has proper releases from property owners within 500 feet of Right-of-Way which is used as disposal areas for unsuitable material.

The Contractor shall construct sod or other adequate retaining banks around perimeters of the disposal areas outside the project to protect existing roads, stream channels, and adjoining properties (including under- ground water supplies) against the spread of, or contamination by, the excavated material. Stream channels and ditches within and adjacent to the project shall be maintained as at present or as specifically altered by the design of the project.

All waste areas shall be thoroughly stabilized by means of drains, proper grading, mulching, loaming and seeding as required to promote vegetation and to insure the areas will not be subject to erosion.

Grading Outside of the Location.
Where directed, earth, loam, or borrow of the kind required shall be used for grading outside of the Right- of-Way and the surface shall be raked, smoothed and rolled. Excavation shall be made as directed on slopes or surfaces outside of and adjoining the location.

When temporary or existing roads are abandoned within the limits of highway work and beyond the limits of the main roadway slopes, their surfaces shall be removed and graded and loamed for a neat and natural appearance for proper drainage of surface water, as directed.

This work shall consist of the excavation, removal and satisfactory disposal, in accordance local, state and federal regulations of all materials for the construction of the proposed work as shown on the Plans or as directed, except those materials for which payment is specified under other items of the Contract.

COMPENSATION

Method of Measurement.

All excavation will be measured in their original position by the cross section method except where such measurement is impracticable the volume shall be measured by such other methods as the Engineer may determine. The contractor shall be paid the unit contract price per cubic yard.

Method **of Payment.**

Under **this item** the Contractor will be paid the contract unit price **per cubic yard**, which unit price shall include full compensation for all labor, materials, tools and equipment and all incidentals necessary to complete the work under

this item in accordance with the plans, as directed by the Engineer and as specified herein, inclusive of the removal and disposal costs subsequent to the completion of the site work.

ITEM 470.2 – HOT MIX ASPHALT BERM

Description

Hot Mix Asphalt berms (See detail this manual) shall be installed as per the standard specifications and details, as directed by the engineer in the field and shall consist of the requirements of Section M3.11.00 for top course or binder.

Foundation

The foundation for the berm shall be as shown on the standard details.

Basis of Measurement and Payment

This item shall be measured per linear foot of berm installed.

Basis of Measurement and Payment

Under Item 470.2 the Contractor will be paid the contract unit price per linear foot for hot mix asphalt berm, complete in place, which unit price shall include full compensation for all excavation of undesirable material and the disposal thereof, in addition to all labor and materials, excavation, hot mix asphalt binder foundation, gravel or dense graded materials as necessary and for all tools and equipment and all incidentals necessary to complete the work under this item in accordance with the plans, as directed by the Engineer and as specified herein.

ITEM 472 – HOT MIX ASPHALT FOR MISCELLANEOUS WORK

Description

When directed by the Engineer to use Hot Mix Asphalt for patching, the contractor shall obtain Hot Mix Asphalt as required under section 460. The hot mix asphalt shall be laid to the thickness directed and compacted to the satisfaction of the Engineer.

Basis of Measurement and Payment

Under Item 472 the Contractor will be paid the contract unit price TON of hot mix asphalt for miscellaneous work, complete in place, which unit price shall include full compensation for all excavation of undesirable material, and the disposal thereof, in addition to all labor and materials, gravel or dense graded materials as necessary and for all tools and equipment and all incidentals necessary to complete the work under this item in accordance with the plans, as directed by the Engineer and as specified herein. (The Contractor is reminded that the four (4) inch yield is to be applied in two separate two (2) inch courses).

ITEM 482-SAWCUTTING

DESCRIPTION

This work shall consist of the sawcutting of asphalt and concrete pavements, sidewalks and trenches where shown on the plans, and as required by the Engineer.

EQUIPMENT

.

The saw shall be capable of wet cutting to neat lines established by the Engineer. The equipment shall be approved by the Engineer prior to commencing work. The pavement shall be sawcut through its full depth at all joints between existing and proposed pavements, and at all utility trenches, to provide a uniform, smooth vertical surface. Existing

pavements shall be sawcut at the limits of work as shown on the plans and as required by the Engineer. Sawcut edges which become broken, ragged or undermined as a result of the Contractor's operations shall be re-cut prior to the placement of abutting proposed pavement at no additional cost to the Department. Sawcut surfaces in asphalt pavements shall be sprayed or painted with a uniform, thin coat of asphalt emulsion tack coat immediately before placement of hot mix asphalt against the cut surfaces.

Method of Measurement.
Sawing pavement will be measured by the foot along the cut line.

Basis of Payment.

Sawing pavement will be paid for at the respective contract unit prices per foot, which prices shall include all labor, materials and equipment necessary to perform the work. Sawcuts made in existing pavement in areas of trenching for new conduit, in areas of new or reset curb, or trench limits for drainage/water work, will be included in the unit price under the respective items and will not be paid for separately under this item.

Item 501.1 - GRANITE CURB TYPE VA1-CURVED
(WITH CDF EMBEDMENT) (INCLUDES WHEELCHAIR RAMP WORK)

Item 504 - GRANITE CURB TYPE VA4-STRAIGHT (WITH CDF EMBEDMENT) (INCLUDES 'ISOLATED' INSTALLATIONS & HANDICAP RAMP WORK)

Description

(a) Straight Type VA4 granite curb and curved Type VA4 granite curb shall be furnished, installed, embedded in Controlled Density Fill, and mortared in place in the locations shown on the plans, as directed by the Engineer and as specified herein. This work shall also include curb which is set along the sideline of the street.

(b) All earth and existing materials excavation, inclusive of all existing undesirable curb or fill, and all backfill material necessary to set the curb as specified, shall be done under these items.

Materials

(c) The curbstone shall be sawn top, split face.

(d) Materials shall conform to the current specifications as set forth in the Commonwealth of Massachusetts Department of Public Works Standard Specifications for Highways and Bridges, dated 1988, Section M9.04.1 and as shown in the City of Newton General Construction Details.

(dd) Controlled Density Fill (CDF) shall be Type 1E (excavatable).

Method of Construction

(e) Construction methods shall conform to the current specifications as set forth in the Commonwealth of Massachusetts Department of Public Works Standard Specifications for Highways and Bridges, dated 1988, Section 501.

(f) New transition and flush granite curb, either of the straight or curved type, which is installed to meet handicap ramp/curb cut compliance shall be constructed according to the Architectural Barriers Board Specifications for such ramps as shown in the City of Newton General Construction Details. This work is to be performed to exact tolerances.

(g) The curb trench shall be excavated down to the underside of the existing curb or lower if necessary. The existing curb shall then be set to true line and grade. Gravel 'bridging' shall be used to support the curb to achieve the initial 'line & grade' with Controlled Density Fill (CDF) being placed in and about the curb soon thereafter to form an unyielding base. However, no CDF shall be used in any curb trench which contains puddled water.

(h) Any area that is inaccessible to mobile mechanical equipment or in restricted areas shall be compacted with pneumatic rammers or powered hand tampers. Compaction shall be carried on until the density of the material is not less than ninety-five (95) percent of the Standard Proctor Density, as determined by Standard laboratory Compaction Test.

(hh) It shall be the responsibility of the contractor to determine the radius of the curb line in the field prior to excavation. All calculations shall be reviewed by the Engineer. This shall be incidental to the project.

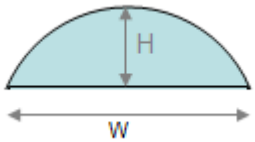

The formula for the radius is:

$$Radius = \frac{H}{2} + \frac{W^2}{8H}$$

where:
W is the length of the chord defining the base of the arc
H is the height measured at the midpoint of the arc's base.

Method of Measurement

(i) Measurements taken for payment will be by the **linear foot** of CDF embedded curb actually installed in accordance with the plans and as directed by the Engineer, as measured along the front array line of the curb. Curved curb shall include all new curb (except corner blocks) set to curves of one hundred (100) feet radius or less.

Basis of Payment

(j) **CDF embedment material shall be paid as part of this item.**

(k) Under **Item 501.1 or Item 504** the Contractor will be paid the contract unit prices respectively per **linear foot** for furnishing and placing CDF embedded straight granite curb, including transitioned straight and/or flush/lip granite curb for handicap ramp systems, complete-in-place, and for furnishing and placing CDF embedded curved granite curb, including transitioned and/or flush/lip curved granite curb for handicap ramp systems, complete-in-place, **the excavation and disposal of all excess material(s),** saw cutting , and for all labor, materials, tools and equipment and all incidentals necessary to complete the work under these items as shown on the plans, as directed by the Engineer and as specified herein.

Item 516 - GRANITE CURB CORNER TYPE A

Description

(a) The Contractor shall install granite corner blocks at driveways and in other locations as directed by the Engineer.

(b) Corner blocks shall be two (2) foot radius Type A granite corner blocks.

(c) All earth excavation or fill and backfill necessary to set the corner blocks as specified shall be done under this item.

Materials

(d) Materials shall conform to the current specifications as set forth in the Commonwealth of Massachusetts Department of Public Works Standard Specifications for Highways and Bridges, dated 1988, Section M9.04.6.

(e) Granite corner blocks shall have the same meaning as granite curb corners.

Method of Construction

(f) Construction methods shall conform to the current specifications as set forth in the Commonwealth of Massachusetts Department of Public Works Standard Specifications for Highways and Bridges, dated 1988 Section 501.

(g) The block shall be set true to line and grade. Gravel shall be forced under the curb with appropriate tools so as to form an unyielding base.

(h) Any area that is inaccessible to mobile mechanical equipment or in restricted areas shall be compacted with pneumatic rammers or powered hand tampers. Compaction shall be carried on until the density of the material is not less than ninety-five (95) percent of the Standard Proctor Density, as determined by Standard laboratory Compaction Test.

Method of Measurement

(i) **Each** radius corner block, complete in place, will be considered as one unit.

Basis of Payment

(j) Under this item the Contractor will be paid the contract unit price for furnishing and placing **each** two (2) foot radius granite corner block, complete in place, which unit price shall include full compensation for all labor, materials, tools and equipment and all incidentals necessary to complete the work under these items as shown on the plans, as directed by the Engineer and as specified herein.

Item 580 – CURB REMOVED AND RESET (WITH CDF EMBEDMENT) (INCLUDES CURB WORK REQ'D FOR HANDICAP RAMPS)

Description

(a) Any existing curb that does not meet the proposed line or grade, or other curb necessarily disturbed throughout the course of these operations, or existing curb used to construct handicap ramp systems, and/or any other existing modular curb designated by the Engineer, shall be reset to the existing line and grade and shall be subsequently embedded in Controlled Density Fill.

(b) Under this item the Contractor shall be responsible for moving existing curb to a new location on the site in order to best meet either the aesthetic and/or the closure needs of the project. This work shall be carried out at the direction of the Engineer.

Method of Construction

(c) The curb to be reset shall be excavated down to the underside of the existing curb or lower if necessary.
The existing curb shall then be set to true line and grade. Gravel 'bridging' shall be used to support the curb to achieve the initial 'line & grade' with Controlled Density Fill (CDF) being placed in and about the curb soon

thereafter to form an unyielding base. However, no CDF shall be used in any curb trench which contains puddled water.

(cc) Controlled Density Fill (CDF) shall be Type 1E (excavatable).

(d) If the Engineer so directs, the Contractor shall remove the existing curb from its existing location, prepare an adequate gravel base and reset the curb as described in **paragraph (b)** above.

(e) Any area that is inaccessible to mobile mechanical equipment or in restricted areas shall be compacted with pneumatic rammers or powered hand tampers. Compaction shall be carried on until the density of the material is not less than ninety-five (95) percent of the Standard Proctor Density, as determined by Standard laboratory Compaction Test.

(f) Transition and flush granite curb, either of the straight or curved type, which is installed to meet handicap ramp/curb cut compliances, shall be constructed according to the Architectural Barriers Board Specifications for such ramps as shown in the City of Newton General Construction Details. This work is to be performed to exact tolerances.

Method of Measurement

(g) Measurements taken for payment shall be taken by the **linear foot** of the reset curb, **inclusive of CDF embedment** material for both straight and curved curb, handicap ramps, gutter mouths, and/or corner blocks, complete-in-place.

Basis of Payment

(h) **CDF embedment material shall be paid as part of this item**.

(i) Under **Item 580** the Contractor will be paid the contract unit price per **linear foot** of reset curb, complete-in-place, which unit price **shall include CDF embedment material, the excavation and disposal of all excess material**, saw cutting, and shall further include full compensation for all labor, materials, tools and equipment, and all incidentals necessary to complete the work under this item, as shown on the plans, as directed by the Engineer and as specified herein.

Item 701 - CEMENT CONCRETE SIDEWALK WITH LAMPBLACK
(@ 2 POUNDS PER CUBIC YARD)

Item 701.1 -CEMENT CONCRETE SIDEWALK AT DRIVEWAYS WITH LAMPBLACK
(@ 2 POUNDS PER CUBIC YARD)

Item 701.2 -CEMENT CONCRETE WHEELCHAIR RAMP

Description

(a) All cement concrete walks, driveway aprons, driveways, and/or ramp systems shall be built under these items. Where existing cement concrete walks and/or driveways in private lands do not meet the proposed line and grade at the street line they shall be rebuilt to meet the proposed line and grade in a manner satisfactory to the Engineer. Contractor shall construct cement concrete walks and driveway aprons where as required by the Engineer.

(b) Excavation (exclusive of rock excavation) shall be done and paid for as part of Item 701, 701.1,701.2, whichever is applicable.

(c) The base for the cement concrete walk shall consist of a six (6) inch gravel base course and a two (2) inch course of dense graded crushed stone. Dimensions shall mean the finished compacted depth. The width of the walk shall be five (5) feet unless other widths are called for by the Engineer.

(d) The base for the cement concrete driveways shall consist of a six (6) inch gravel base course and a two (2) inch course of dense graded crushed stone topped with six (6) inches of concrete and/or as required by the Engineer. Dimensions shall mean the finished compacted depth. The width of the driveway aprons shall be determined in the field by the Engineer to best meet the field and end-use conditions.

(e) The base for the cement concrete curb cuts shall consist of a six (6) inch gravel base course and a two (2) inch course of dense graded crushed stone topped with eight (8) inches of cement concrete and/or as required by the Engineer. Dimensions shall mean the finished compacted depth. The width of the ramps (typically five (5) feet in width) will be determined in the field by the Engineer to best meet the field and end-use conditions.

(f) The base for the cement concrete walk maintenance shall consist of the existing gravel base course as approved by the Engineer. The existing gravel base course shall be well compacted prior to approval by the Engineer. Dimensions shall mean the finished compacted depth. The width of the walk shall match existing walk width unless otherwise required by the Engineer.

(g) The base for the cement concrete driveway apron maintenance shall consist of the existing gravel base course as approved by the Engineer. The existing gravel base course shall be well compacted prior to approval by the Engineer. Dimensions shall mean the finished compacted depth. The width of the driveway apron shall match existing walk width unless otherwise required by the Engineer.

Materials

(h) Cement concrete shall be of an air entrained type conforming to the current specifications of Section M4 of the Massachusetts Standard Specifications for Highways and Bridges supplement of June 19, 1985. Cement concrete shall have a 28 day compressive strength of 4000 PSI using 3/4 inch aggregate, and with an entrained air content of 7.0 + 1.0%.

ADD MIXTURES: Ordinary or emulsified carbon black - two (2) pounds per cubic yard, unless otherwise required by the Engineer.

Upon delivery of each and every concrete mix, the Engineer shall be furnished with a slip clearly stating the design mix and the quantities of the above mentioned add mixture, and any other add mixtures present in the mix. Any concrete mix, which when tested on the job site is found to contain quantities of entrained air less than six (6) or more than eight (8) per cent or which yields a slump of less than three (3) inches or greater than five (5) inches shall be rejected, the decision of the Engineer shall be final. The Engineer reserves the right to change the above mix in order to meet the required strength test.

(i) All concrete shall be transit mix and shall conform to the current specifications of A.S.T.M. C-94. Hand mix concrete or machine mixed on the job concrete shall be used only when permitted by the City Engineer in writing.

(i) Premoulded asphalt expansion joints shall conform to the requirements of AASHTO Designation M33.
(ii) All gravel materials shall meet MassDOT Standard Specifications for Highways and Bridges, Latest Edition.

Method of Construction

(k) When new concrete is to be placed adjacent to existing walkways and/or driveways the Contractor shall cleanly cut a crisp joint cut by a means, and along a line, approved by the Engineer. No jackhammering of the existing walk and/or driveway shall be allowed.

(i) The walks shall be excavated or filled to a subgrade twelve (12) inches below and parallel to the finished grade or as required by the Engineer.

(j) Upon the prepared subbase, the gravel and dense graded crushed stone base course shall be constructed and rolled with rollers weighing not less than three (3) tons and not more than five (5) tons until the surface presents a firm unyielding surface satisfactory to the Engineer.

(k) Any area that is inaccessible to mobile mechanical equipment or in restricted areas shall be compacted with pneumatic rammers or powered hand tampers. Compaction shall be carried on until the density of the material is not less than ninety-five (95) percent of the Standard Proctor Density, as determined by Standard laboratory Compaction Test.

(l) All concrete walks and/or driveway elements shall be constructed with the use of side forms. The forms shall be clean, smooth and free from warp. Forms for straight concrete walks shall be two by fours (2"X 4"'s) staked at intervals no greater than four (4) feet, forms for curved sections of concrete walks shall be four (4) inch strapping staked as required by the Engineer, but in no case at intervals greater than four (4) feet. The forms shall be thoroughly braced and set to the proposed line and grade.

(m) All concrete slabs shall be constructed in one (1) course having a total finished depth of four (4) inches, all driveway elements shall be constructed in one (1) course having a total finished depth of six (6) inches and all ramps shall be constructed in one (1) course having a total finished depth of eight (8) inches. Top or wearing courses shall not be permitted.

(n) The end of every pour shall end at joints. Fresh concrete will not be allowed to be placed against previously laid concrete which has attained its initial set, excepting at full vertical joints.

(o) The walks and/or driveway aprons shall be blocked out in rectangular sections measuring not more than six (6) feet in any dimension. Transverse joints for a distance of twenty (20) feet, more or less, shall be dummy joints with an approved edging tool which shall score the joints a minimum of one (1) inch in depth. The concrete walks shall be placed in alternate slabs twenty (20) feet, more or less, in length. The slabs for walks shall be separated by transverse premoulded asphalt expansion joints one-half (1/2) inch in thickness and a depth of not less than the full thickness of the walk set at right angles to the walk and to the side forms. No finishing operation shall be performed while free water is present. Finishing operations shall be delayed until all bled water and water sheen has left the surface and the concrete has started to stiffen. After water sheen has disappeared, edging operations where required shall be completed. After edging and jointing operations, the surface shall be floated with either aluminum or magnesium floats. Immediately following floating, the surface shall be steel-troweled. If necessary, tooled joints and edges shall be rerun before and after troweling to maintain uniformity. After troweling, the surface shall be brushed by drawing a soft-bristled push broom with a long handle over the surface of the concrete to produce a nonslip surface. In conveying the concrete from the place of mixing to the place of deposit, the operation shall be conducted in such a manner that no mortar will be lost, and the concrete shall be so handled that the concrete will be of uniform composition throughout, showing neither excess nor lack of mortar in any one place.

(p) Premoulded asphalt expansion joints shall be placed adjacent to or around existing curb, walks, buildings and other structures designated by the Engineer.

(q) No concrete shall be placed on a frozen subbase nor shall concrete be poured when the air temperature is thirty-three (33) degrees Fahrenheit and falling, unless permitted by the Engineer, in which case the adequate means for the protection of the concrete must be provided for. No salt or other unauthorized admixtures shall be used. When completed, the newly laid concrete shall be protected from all traffic and the weather for a period of three (3) days. The Concrete shall be cured by spraying with an approved curing compound of a recognized brand applied in accordance with the manufacturer's instructions.

(r)This item shall also apply to cement concrete walks and/or driveways on private lands that have to be rebuilt to meet the proposed line and grade.

(s) Typical concrete driveways shall be constructed in one (1) course having a total depth of six (6) inches. In special rare cases, or as otherwise shown on the plans, an eight (8) inch depth shall be installed as required by the Engineer. In such cases the Engineer shall pay the Contractor at a rate that is one and a half (1.5) times the contract bid for six (6) inch cement concrete driveways.

(t) All water service boxes, and/or any other service box, and/or any hand hole, which falls within the walk/drive area, are to be raised such that the top plane of the utility cover is set flush with the finished sidewalk surface, and such work shall be carried out to the satisfaction of the Engineer. This work shall be paid for as part of Item 701, 701.1, 701.2, whichever is applicable.

(u) In those cases where 'frozen' water service boxes are encountered the Contractor is to bring these special cases immediately to the attention of the Engineer, and upon his order to do so, the Contractor shall either remedy the situation by a means which is acceptable to the Engineer or shall otherwise retrieve corrective materials from the City of Newton Utility, and subsequently install them to the satisfaction of the Engineer and this work shall be incidental to the project.

(uu) **Prior to the excavation of any existing walk or curb cut, the contractor shall be required to provide pedestrians with a temporary walking corridor around each proposed construction area. This walking route shall be delineated with reflectorized barrels and caution tape, and shall be a convenient and accessible path that replicates as nearly as practical the most desirable characteristics of the existing walk. The reflectorized drums shall meet the standards of Section 6F.63 Channelizing Devices of the MUTCD manual, latest edition. The proposed temporary route shall be a minimum of 48" wide unless otherwise directed by the Engineer. The temporary walking route shall remain in place until directed by the Engineer to be removed. Failure to provide temporary walking routes will result in the suspension of work until said temporary walking routes can be established to the satisfaction of the Engineer. All labor, equipment and material required for the installation and removal of the temporary walking routes shall be considered incidental to the project.**

Under no circumstances shall the contractor have any open excavations for more than 24 hours, or during weekends and holidays. Failure to do so shall result in a penalty of $1000.00 per day per open excavation.

At no time shall curbing be stockpiled on an active street or active sidewalk.

Method of Measurement

(v) Cement concrete walks shall be measured for payment by the square yard, complete-in-place.

(w) Cement concrete driveway aprons and/or driveways shall be measured for payment by the square yard, complete-in-place.

(x) Cement concrete ramp systems shall be measured for payment by the square yard, complete-in-place.

(v) Cement concrete walk maintenance shall be measured for payment by the square yard, complete-in-place.

(w) Cement concrete driveway apron maintenance shall be measured for payment by the square yard, complete-in-place.

Basis of Payment

(z) Under Item 701, 701.1,701.2 and the Contractor will be paid the contract unit price per square yard for the cement concrete walks, curb cuts or driveway aprons complete-in-place, which work shall include the gravel and dense graded crushed stone base, as well as the premoulded expansion joints. The unit price shall include full compensation for all labor, materials, tools and equipment and all incidentals necessary to complete the work under these items as shown

on the City of Newton Standard Details, as required by the Engineer and/or as specified herein, inclusive of the raising of all service boxes to the finished grade.

(aa) Excavation and disposal (exclusive of rock excavation) shall be done and paid for as part of Item 701, 701.1, 701.2, whichever is applicable.

(bb) Proposed granite curbing as required for compliant construction of proposed curb cuts, as shown by the City of Newton Standard Details, shall be done and paid for as part of the other appropriate items in this contract.

Item 702 – HOT MIX ASPHALT WALK SURFACE

Item 703- HOT MIX ASPHALT DRIVEWAY

Description

(a) Hot mix asphalt walks and/or drive aprons shall be constructed in where directed by the Engineer.

(b) Excavation shall be done and paid for under **these items**.

(c) Hot mix asphalt walks and/or drive aprons shall consist of a six (6) inch gravel base, eight (8) inches at driveways and a two (2) inch course of dense graded crushed stone, topped with a two (2) inch hot mix asphalt wearing surface. All dimensions shall mean the finished compacted depths. The width of the walk shall be five (5) feet unless other widths are called for on the plans or by the Engineer.

Materials

(d) Gravel and dense graded crushed stone shall conform to M1.03.0 and M2.01.7of the MassDOT Standard Specifications, latest edition, respectively.

(e) This type of pavement shall be composed of mineral aggregate, mineral filler and bituminous material, plant mixed and laid hot. The mixing and materials shall conform to the current specifications as set forth in the MassDOT Standard Specifications, latest edition, Sections 460 and M3, dated l988 for hot mix asphalt.

Method of Construction

(f) The walks and/or drive aprons shall be excavated or filled to subgrade ten (10) inches below and parallel to the finished grade. At driveways the walks shall be excavated or filled to subgrade twelve (12) inches below and parallel to the finished grade. The gravel base course and the dense graded crushed stone course shall then be constructed and rolled with roller weighing not less than three (3) tons and not more than five (5) tons until the surface presents a firm unyielding surface satisfactory to the Engineer.

f) Any area that is inaccessible to mobile mechanical equipment or in restricted areas shall be compacted with pneumatic rammers or powered hand tampers.

(g) Compaction shall be carried on until the density of the material is not less than ninety-five (95) per cent of the Standard Proctor Density as determined by Standard Laboratory Compaction Test. The Contractor shall arrange and pay for and submit to the Engineer results of such tests taken in such number as to indicate a test of every eight hundred (800) square feet of compacted area.

(h) All hot mix asphalt walks and/or drive aprons shall be constructed with the use of side forms. The forms shall be clean, smooth, and free from warp, of sufficient strength to resist springing out of shape and of a

depth to conform to the thickness of the hot mix asphalt wearing surface. The forms shall be well staked and thoroughly braced and set to the proposed line and grade.

The hot mix asphalt walks shall consist of a two and a half (2.5) inch finished depth of hot mix asphalt laid in two (2) courses, a base or binder course of one and half (1 1/2) inch and a top or wearing course of one (1) inch. All dimensions shall mean the finished depths. The mixture shall be placed from approved dump sheets or wheelbarrows fed directed from trucks. Dumping the mixture directly from trucks on the base will not be allowed.

The hot mix asphalt drive aprons shall consist of a three and a half (3.5) inch finished depth of hot mix asphalt laid in two (2) courses, a base or binder course of two (2) inch and a top or wearing course of one and one half (1 1/2) inch. All dimensions shall mean the finished depths. The mixture shall be placed from approved dump sheets or wheelbarrows fed directed from trucks. Dumping the mixture directly from trucks on the base will not be allowed.

(f) The hot mix asphalt must be kept clean during hauling and handling and covered during transit with canvas or other material which will retain the desired pavement temperature. These mixtures must not be hauled in such a manner that segregation of the ingredients takes place, or that a crust is formed on the surface, or that the mixture will crumble or flatten out when dumped. Trucks which transport the mixture shall be tight, and the side of the bodies shall be coated with a thin film of soap solution. The dispatching of trucks from the distribution point shall be so arranged that all the material which is to be delivered at or on the road surface during any day may be placed and shall have received final compression in a continuous manner in order to minimize cold seaming.

(g) The hot mix asphalt mixture shall be delivered to the work in such condition that it is easily workable and can be efficiently laid. The mixture shall be laid only on an approved base course which is dry and only when weather conditions are suitable which shall be decided by the Engineer.

(h) All hot mix asphalt applied to the roadway shall only be applied in bright sunlight or partly cloudy weather without the threat of rain. The Contractor is not to schedule bituminous roadway application unless such favorable weather conditions are professionally forecast by a recognized weather agency and at the request of the Engineer, this forecast shall be filed with Engineer in hard-copy form. Further, no hot mix asphalt shall be applied upon a residually wet surface, and no hot mix asphalt which has been prematurely cooled by rain, either on the roadway or on the truck, will be accepted.

(k) The separate courses shall be rolled with a self-propelled equally balanced tandem roller weighing not less than three (3) tons and not more than five (5) tons. In places inaccessible to a power roller, compaction shall be obtained by means of hand tampers.

(l) The roller shall pass over the unprotected end of the freshly laid mixture only when the laying of the mixture is to be discontinued at the end of the day's operation. In such cases, provisions shall be made for proper bonding with new surface mixture by cutting back over the full width and depth of the course. When laying of the course is resumed, the exposed edge of the joint shall be painted with a thin uniform coat of hot asphalt, just before the new mixture is laid.

(m) The finished surface shall present an even and true contour. When tested with a ten (10) foot straight edge place parallel to the center line of the surface course there shall be no deviation from a true surface in excess of one quarter (1/4) of one (1) inch. The sides when the forms are removed shall present a true line conforming to the line desired.

(n) Landings and roundings at the street corners shall be constructed as specified in the construction details and/or as directed by the Engineer.

Method of Measurement

(o) Hot mix asphalt walks and/or drive aprons shall be measured for payment by the square yard, complete in place.

Basis of Payment

(p) Under **Items 702 & 703** the Contractor will be paid the contract unit price per square yard for the hot mix asphalt walks and/or drive aprons, complete in place, **including excavation, the gravel and dense graded crushed stone**. The unit price shall include full compensation for all labor, materials, tools and equipment and all incidental work necessary to complete the work under this item as shown on the plans, as directed by the Engineer and as specified herein.

ITEM 704 -DETECTABLE WARNING PANEL FOR WHEELCHAIR RAMP

Description

(a) The work under this item shall consist of furnishing and installing, by embedding in wet cement concrete, a factory manufactured Composite Detectable Tile Warning Surface that is ADA guideline compliant for the purpose of indicating the presence of a handicap ramp and/or curb cut location. These surfaces shall be accessed by the general public and the physically challenged alike, therefore the installation of these surfaces will require that the Contractor exercise exceptional care in the placement and the finishing process' associated with these tiles.

Materials

(b) The Surface shall be equal * to PART NO. 2460IDPAV2 :

* A federal yellow twenty four inch by sixty inch (24"x 60") Cast-In-Place Truncated Dome (Composite Tactile) Detectable Warning System as manufactured by;

ADA Solutions, Inc.
P.O. Box 3
North Billerica MA 01862
1-800-372-0519
www.adatile.com

*An approved equal shall mean a factory-fabricated system which either meets or exceeds the physical characteristics of the representative surface which is noted above. To that end the contractor must seek approval for an alternate surface by submitting, to the City of Newton, a catalog cut of the system which he proposes to use. This submittal, and/or actual samples of the material, shall clearly describe the physical characteristics of the proposed alternative unit such that the City of Newton can readily evaluate the proposed system.

"Equality" - An item equal to that named or described in the specifications of the contract may be furnished by the Vendor and the naming of any commercial name, trademark or other identification shall not be construed to exclude any item or manufacturer not mentioned by name or as limiting competition but shall establish a standard of equality only. An item shall be considered equal to the item so named or described if (1) it is at least equal in quality, durability, appearance, strength and design; (2) it will perform at least equally the function imposed by

the general design for the work being contracted for or the material being purchased; and (3) it conforms substantially, even with deviations, to the detailed requirements for the item in the specifications. The name and identification of all materials other than the one specifically named shall be submitted to the City in writing for approval, at time of bid, use or fabrication of such items. Subject to the provisions of M.G.L., Ch. 30, Sec. 39J, approval shall be at the sole discretion of the City, shall be in writing to be effective, and the decision of the City shall be final. The City may require tests of all materials so submitted to establish quality standards at the Vendor's expense. All directions, specifications and recommendations by manufacturers for installation, handling, storing, adjustment and operation of their equipment shall be complied with; responsibility for proper performance shall continue to rest with the Vendor.

(c) The Detectable Warning Surface shall be of the "CAST IN PLACE REPLACEABLE TACTILE WARNING SURFACE TILES" type or approved equal.

Method of Construction

(e) Manufacturer's warranties are to be assigned and delivered to the City of Newton.

(f) The Contractor shall install each Detectable Tile to meet the exact gradient tolerances prescribed in the current ADA guidelines which are shown in the City of Newton General Construction Details. Typically this gradient, from top to bottom, shall not exceed 7.5 % (or two inches (2") over the twenty-four (24") inch depth of the Tile). Nor shall the gradient, from side to side, exceed 1.5% (or one inch (1") over the sixty inch (60") width of the tile).

(g) In addition to complying with the latest ADA requirements the Contractor shall install each Detectable Tile in accordance with the directives shown on the plan.

(h) Typically each Detectable Tile shall be installed so that the front (street side) edge is set back twelve (12") inches from the face of the curb (so that six (6") inches of cement concrete remain between the back of the curb and the edge of the tile).

(i) Cracked, chipped or deficiently domed tiles will not be accepted.

(j) The Contractor must plan his work so that the outlying cement concrete panels transition to the edge of the tile in a smooth and uniform manner.

(k) Any cement concrete placed adjacent to the tiles shall be brought flush with the surface edge of the tile and shall be finished with an edge trowel.

Method of Measurement

(l) Under this item the Contractor shall be paid per each of Detectable Tiles complete-in-place.

Basis of Payment

(m) Under this item the Contractor will be paid the contract unit price per each of Detectable Tiles, complete-in-place, which unit price shall include full compensation for all labor, materials, tools and equipment and all incidentals necessary to complete the work under this item, as shown on the plans, as required by the Engineer and as specified herein.

ITEM 706.1 – STONE WALK REMOVED AND RESET

Description

Under this item, the contractor shall remove and reset any stone walk, cobblestone, brick or other landscape feature that comes into conflict with the proposed work, as directed by the engineer.

Construction

All materials to be removed and reset as directed by the Engineer shall be stacked on pallets prior to resetting.

The setting bed aggregate (ASTM No.8) shall be spread evenly over the base course and screed to a minimum nominal 1-1/2 inch thickness.

Gradation for Bedding Layer

Sieve Size	Percent Passing
½”	100
3/8”	85-100
No. 4	10-30
No. 8	0-10
No. 16	

For installation on setting bed aggregate and soil subgrade, the installer should be aware that the top surface of the pavers shall be flush with the surrounding bricks after compaction. The bedding material shall not be disturbed or pre-compacted after it has been screed. Brick pavers shall be free of foreign material prior to resetting installation. Brick pavers shall be set in accordance with the existing patterns. Typical joints between the pavers shall be no less than 1/16 inch and no more than 3/16 inch in width. Brick Pavers shall be cut as necessary to accommodate field conditions and to achieve an accurate and consistent fit to the existing pattern. Pavers shall be free from stain, dirt, or dust after cutting. Paver units shall not be cut to a size smaller than one-third of a whole paver. Any removed brick pavers not reset in the course of this project shall be disposed of by the contractor at no additional cost.

Basis of Measurement and Payment

Under this item the Contractor will be paid the contract unit price per square yard for the brick walk removed and reset completion-price, which work shall include an approved setting bed, dry sand or cement grout joint material and neoprene joint filler. The unit price shall include full compensation for all labor, materials, tools and equipment and all incidentals necessary to complete the work under these items as shown on the City of Newton Standard Brick Paver Detail, as required by the Engineer and/or as specified herein, inclusive of the raising of all service boxes to the finished grade.

ITEM 710.1 –SUPPLY AND DELIEVER GRANITE BOUNDS

Description

Under this item, the contractor shall supply and deliver granite bounds as directed to the Department of Public Works yard on Elliot Street in Newton, Massachusetts.

Materials

Material shall meet the requirements specified in the following Subsections of Division III, Materials:

Granite Bounds M9.04.8

All bounds shall be 5” x 5” x 4’ long.

Method of Measurement

Under this item the Contractor shall be paid per each of granite bound, delivered.

Basis of Payment

Under this item the Contractor will be paid the contract unit price per each of granite bounds, , which unit price shall include full compensation for all labor, materials, tools and equipment and all incidentals necessary to complete the delivery of these items, as shown on the plans, as required by the Engineer and as specified herein.

ITEM 748 - MOBILIZATION FOR ALL WORK ZONES
(SURVEY SERVICES, CONFERENCES, VIDEO FILE, NOTIFICATIONS, ETC.)

Description

(a) Under the direction of a Massachusetts Professional Land Surveyor (PLS) the Contractor shall extract, correlate, and subsequently post the design grades shown on the plan and/or as otherwise shown on the City supplied profile.

(b) The Contractor is to make a video tape and/or photographic record of all existing sideline conditions, prior to the commencement of construction activities, and/or as may be required as the construction activities progress, for the purpose of documenting all decrepit, and/or extraordinary points of concern. All video and picture making shall be done on foot and shall not be 'shot' from a vehicle. This video record shall be made by the Contractor and a copy, or a secondary video tape, shall be delivered to the Engineer. A representative from the Engineering Division shall present at the time of the recording.

(c) The Contractor is to coordinate and make accommodations for all work performed on private property in the execution of this contract, and is to further coordinate, arrange and/or make accommodations for the performance of all second party utility work which may be required in order to complete the work required under this contract.

(cc) The contractor is hereby notified that any work being performed adjacent to private property may have an existing irrigation system. It is the contractor's responsibility to identify any and all irrigation systems and take the upmost care not to damage said system. If any system is damaged by the contractor, it shall be the contractor's responsibility to repair the system within five (5) business days. All repair work shall be considered incidental to the project.

(d) The Contractor is responsible for the scheduling coordination and tracking of all Police services under this item, however the actual cost of Police Services will be paid for under the appropriate item in this contract.

(e) Under this item the Contractor will be required to attend informational meetings, typically one for the general public when deemed necessary, and several with the City of Newton administration in order to discuss and subsequently address all points of concern, including but not limited to a Preconstruction Conference and Progress Conference(s) and inspection walk-through.

(f) Under this item the Contractor is responsible for processing all the necessary paperwork in the execution of this contract, as well as providing and distributing fliers and notifications to abutters and other concerned parties as the project commences and as it progresses.

(g) Under this item the Contractor shall comply with all special procedural and/or other site specific directives as stipulated on the plan(s) to ensure a structured and efficient execution of this contract. In addition, and from time to time, the Contractor shall also be required to accommodate and comply with other special requests so that the needs of the general public, abutters, and/or other City of Newton agencies are addressed swiftly and appropriately.

Method of Compliance

(h) The grade points shall be posted all along the roadway corridor on sturdy colorized four foot (4') high iron pins and/or stakes such that the final roadway, once completed, fully complies with the design scheme and/or with any modification necessitated by field changes ordered by the Engineer. However, the posting of grades shall not be limited to just the design grades but shall also include the interpolation and posting of intermediate grades and/or the re-posting of certain grades, as may be from time to time required by any interested party in order to successfully investigate and/or otherwise install, to the satisfaction of the Engineer, any drainage, curbing, pavement and/or any other grade dependent project related component or grade dependent issue.

(i) The Contractor shall coordinate the grading and layout activities with the Engineer to ensure that the design grades are posted in an expeditious and acceptable manner. To that end the Contractor shall supply and install, at all critical grade points identified on the plan (and/or profile), as many sturdy pins and/or stakes as he deems necessary, or as otherwise may be required by the Engineer. The pins and/or stakes, once set, shall be clearly marked with paint and flagging such that their physical location, as well as the posted grades, can be easily seen by the general public and by the field personnel. Subsequently, once the pins and/or stakes have served their purpose, they shall be immediately removed by the Contractor.

(j) As the project commences the Contractor may opt to make a photographic record in lieu of a videotape but only to supplement the preconstruction sideline video survey, and only when a photographic record is deemed necessary and sufficient by the Engineer and/or the Contractor.

(k) Videos and/or photographs are to be taken and delivered to the Engineer in such a manner that the subject matter can be clearly seen, and in such a timely manner that the collected information is not lost. The video and/or photographs are to be made on foot via a hand- carried camera. No digital pictures shall be allowed. Only conventionally developed film is to be used.

(l) The Contractor is to give ample notice prior to performing certain extraordinary construction related activities on private lands (i.e., walls, steps etc.), and/or is to discuss, and/or is to make safe and reasonable accommodation of access, for all private property abutters affected by the scheduled construction activities at hand. In certain cases the Contractor will be further required to make special accommodations for the handicapped or for other physically challenged or sensor impaired individuals who live in or about the construction area so that their needs may be appropriately addressed. Notice of intent to construct or to disturb private property and/or access routes shall be made at least twenty four (24) hours in advance of the scheduled activity and/or as required by the Engineer. This notification shall be made in writing on a format acceptable to the Engineer, with said notices being posted at the subject address in a location nearest to the regular mail delivery location. The decision to post notices will be at the discretion of the Engineer in the field.

Basis of Payment

(m) Under Item 748 the Contractor will consider all labor and materials required to complete these tasks throughout the entire term of the project an incidental cost.

Item 751 – LOAM BORROW

Description

Grassed Areas adjacent to the areas of disturbance that do not meet the proposed line or grade shall be regraded to meet the proposed line and grade. **The depth of loam used in regrading shall be six (6) inches measured in its finished state** and the work shall conform to the dimensions shown on the construction details.

Materials

Loam shall be clear, rich, dark colored loam friable, reasonably well supplied with plant food, free from excess swamp muck, peat, clay, silt, stones, sods, roots, gravel, sand, subsoil or other foreign material. All loam furnished for this work shall be approved by the Engineer.

Limestone shall be ground limestone that will pass a No. 20 sieve, and at least seventy-five (75) per cent will pass a No. 100 Sieve. Ground limestone shall have a neutralizing value satisfactory to the Engineer.

Fertilizer shall be furnished in containers plainly marked with the chemical analysis of the product and it shall have one of the following compositions by weight.

	10-6-4	8-6-4	7-7-7
Nitrogen	10% min.	8% min.	7% min.
Available Potash Acid (P_20_5)	6% min.	6% min.	7% min.
Water Soluble Potash (K_20)	4% min.	4% min.	7% min.

At least fifty (50) per cent by weight of the nitrogen content of the fertilizer shall be derived from organic materials.

Grass seed shall be of the previous year's crop and in no case shall the weed seed content exceed one (1) per cent by weight. Grass seed shall conform to the requirements of the following table:

	Proportion	Germination Minimum	Purity Minimum
Creeping Red Fescue	50%	85%	95%
Kentucky Blue	25%	85%	90%
Domestic Rye	10%	90%	98%
Red Top	10%	85%	92%
Ladino Clover	5%	85%	96%

Grass seed for slopes graded at the rate of 3:1 and steeper shall conform to the requirements of the following table:

	Proportion	Germination Minimum	Purity Minimum
Creeping Red Fescue	50%	85%	95%
Kentucky Blue	25%	85%	90%
Domestic Rye	10%	90%	98%
Red Top	10%	85%	92%
Ladino Clover	5%	85%	96%

The seed mixture specified for slopes graded at the rate of 3:1 and greater shall consist of a tough hardy type. The mixture for slopes less than 3:1 and for grass plots shall be of the finer type which will produce a fine turf.

Lawns shall be excavated to subgrade eight (8) inches below and parallel to the finished grade. Loam shall then be spread on the subgrade in sufficient quantities to produce without rolling and after material settlement has taken place a depth of six (6) inches. On this layer of loam ground limestone shall be spread at the rate of one-half pound per square yard and thoroughly incorporated into the loam for the total depth, by harrowing or spading and raking. The surface shall be brought smoothly to a grade parallel to the finished grade.

The several varieties of seed shall be furnished and delivered separately, and mixed after delivery as directed by the Engineer.

The responsibility for satisfactory results shall rest entirely with the Contractor regardless of any tentative approval given by the Engineer.

Method of Construction

The loam borders shall be excavated to subgrade six (6) inches below and parallel to the finished grade. Loam shall then be spread on the subgrade in sufficient quantities to produce without rolling and after material settlement has taken place, a depth of four (4) inches. On this layer of loam ground limestone shall be spread at the rate of one-half (1/2) pound per square yard and thoroughly incorporated into the loam for the total depth, by harrowing or spading and raking. The surface shall be brought smoothly to a grade parallel to the finished grade.

The second layer of loam shall then be spread in sufficient quantities to produce after final rolling the required finished depth. At least five (5) days shall elapse after the application of the ground limestone, and then fertilizer shall be spread on the top layer of loam at the rate of two tenths (2/10) of a pound per square yard. The full depth of the loam shall then be spaded, harrowed and graded to the finished grade.

After the grass plots have been prepared as described above, grass seed shall be carefully and appropriately sown at the rate of three and six tenths (3 6/10) pounds to each one hundred (100) square yards. The surface shall then be raked until the grass seed is thoroughly covered with a thin layer of loam. Finally the surface shall be rolled with a hand roller weighing not more than one hundred (100) pounds per foot of width.

The Contractor shall insure a good catch of grass and shall be responsible for the first cutting of the grass. He shall maintain seeded areas during construction and he shall reloam, regrade and reseed any area which in the opinion of the Engineer requires such.

The Contractor shall not disturb beyond (2) feet from the back of walk without permission from the Engineer. Any damage done to the lawn without permission shall be the responsibility of the Contractor to repair and shall be considered incidental to the project.

Method of Measurement

(l) Measurements taken for payment shall be by the **square yard** of the finished work, complete-in-place.

Basis of Payment

Under **Item 751** the Contractor will be paid the contract unit price per **square yard** for all regraded lawns, complete-in-place, which unit price shall include full compensation for all labor, materials, tools and equipment and all incidentals necessary to complete the work under this item in accordance with the plans, as directed by the Engineer and as specified herein.

Item 998 – MISCELLANEOUS WORK ALLOWANCE

Description

The intent of this section is not for work or materials typically incidental to other work items performed and/or rendered under this contract, or is for work and/or materials which are otherwise called for under these specifications, and/or for work which is indicated on the plans, but for work and materials which are unique in nature and rendered as a direct request of the Engineer. These items of work shall be completed only when and as directed by the Engineer. The Contractor may not proceed with any work under this section without the written notice of the Engineer to complete the work under the "Miscellaneous Work Allowance".

The sum to be allowed for the work of this **item shall be ten thousand dollars ($10,000.00)**.

All work under this item shall be paid for by one or more or a combination of the following methods at the City's discretion:

a. Unit prices previously bid
b. An agreed lump sum
c. The actual cost of:

1. labor, including foreman;
2. materials entering permanently into the work;
3. the ownership or rental cost of construction plant & equipment during the time of use on the extra work;
4. power and consumable supplies for the operation of power equipment;
5. insurance;
6. social security and old age, and unemployment benefits.

To the cost under c. there shall be added a fixed fee to be agreed upon, but **not to exceed fifteen per cent (15%) of the actual cost of the work.** The fee shall be compensation to cover the cost of supervision, overhead, bond, profit and any other general expense.

The City shall retain a cash credit in full or in part, in the event that the final cost of materials and/or equipment is lower than the original cash allowance provided.

To the estimated cost or actual cost under (c) for work performed by subcontractors, there shall be added a fixed fee of ten per cent (10%) as compensation to cover the subcontractor's cost of supervision, overhead, profit and any other subcontract general expense, plus ten per cent (10%) as compensation to cover the General Contractor's cost of supervision, overhead, profit, bond, and any other general expenses.

Basis of Payment

Payment for work completed under **Item 998** shall be as specified above, in full or in part, as pre-approved by the Engineer.

Item 999 - ALLOWANCE FOR PAYMENT OF POLICE OFFICERS

Description
(a) The Contractor shall include in his bid an allowance of **twenty five thousand dollars ($25,000.00)** for payment of Police traffic officers. This allowance will be used as a basis for comparison of bids only.

(b) The City will reimburse the Contractor for the full amount of charges for Police services.

(c) Article 1 of the Special Conditions of the Contract shall apply.

(d) Under this item the Contractor shall be responsible for ordering, and for canceling details on a day to day basis. In the event the Contractor has ordered police details, and does not give the police department ample advance notice that work has been cancelled for that day due to inclement weather or for any other reason, then the Contractor shall bear the expense of that billed detail.

(e) The Contractor shall completely familiarize himself with the current policies regarding and/or regulating police details. In the event police detail requests cannot be completely filled to cover the Contractor's scheduled work for any particular day then the Contractor shall adjust his work schedule accordingly and shall not hold the City responsible for any loss of time, or for any other financial loss. The City of Newton will however grant an extension of time to the original contract term for each day lost due to insufficient police staffing.

Basis of Payment

(e) Under Item 999 the Contractor shall submit paid invoices to the Engineer. The Contractor shall then be reimbursed the full invoice amount for City of Newton Police Department charges and/or, when applicable, for Massachusetts State Police charges, as full reimbursement under the allowance for payment of Police officers.

(f) The original invoice issued by the billing authority must be submitted to the Engineer for payment under this item.

END OF SECTION